REFERENCE APPENDICES

CALIFORNIA ENERGY COMMISSION

COMMISSION PROPOSED REGULATIONS

for the 2008 BUILDING ENERGY EFFICIENCY STANDARDS

FOR RESIDENTIAL AND NONRESIDENTIAL BUILDINGS

EXPRESS TERMS – 45 DAY LANGUAGE

JOINT APPENDICES
RESIDENTIAL APPENDICES
NONRESIDENTIAL APPENDICES

November 2007
CEC-400-2007-020-45DAY

Arnold Schwarzenegger
Governor

Mike Chrisman

Secretary for Resources

CALIFORNIA
ENERGY
COMMISSION

Jackalyne Pfannenstiel
Chairman

Efficiency Committee:
Jackalyne Pfannenstiel
Arthur H. Rosenfeld

B.B. Blevins
Executive Director

Valerie Hall
Deputy Director
Efficiency and Renewable Energy

Bill Pennington
Office Manager
Buildings and Appliances Office

Project Manager
Maziar Shirakh, PE
Buildings and Appliances Office

NOTICE

This version of the 2008 Reference Appendices is a marked version; that is, it contains underlined or struck-out text showing changes from the 2005 version. For more information, visit www.energy.ca.gov/title24, call the Title 24 Energy Efficiency hotline at 800/772-3300 (toll-free from within California) or 916/654-5106, or send email to title24@energy.state.ca.us.

Note that this is a new separate document introduced in the 2008 Standards.

2008 REFERENCE APPENDICES
TABLE OF CONTENTS

Joint Appendices

JA1 – Glossary
JA2 – Reference Weather/Climate Data
JA3 – Time Dependent Valuation (TDV)
JA4 – U-factor, C-factor, and Thermal Mass Data
JA5 – Reference Design for Programmable Communicating Thermostats
JA6 – Charge Indicator Display
JA7 – Quality Insulation Installation Procedures for Medium-Density, Closed-Cell and Low Density, Open-Cell Spray Polyurethane Foam (SPF)
JA8 – Testing Of Light Emitting Diode Lighting Systems

Residential Appendices

RA1 – HVAC Sizing
RA2 – Residential HERS Documentation and Enforcement Procedures
RA3 – Residential Field Verification and Diagnostic Test Procedures
RA4 – Eligibility Criteria for Energy Efficiency Measures
RA5 – Interior Mass Capacity

Nonresidential Appendices

NA1 – Nonresidential HERS Documentation and Enforcement Procedures
NA2 – Nonresidential Field Verification and Diagnostic Test Procedures
NA3 – Fan Motor Efficiencies
NA4 – Compliance Procedures for Relocatable Public School Buildings
NA5 – Envelope Tradeoff Procedure
NA6 – Alternate Default Fenestration Thermal Properties
NA7 – Acceptance Requirements for Nonresidential Buildings
NA8 – Illuminance Categories and Luminaire Power

Joint Appendix JA1 – 2008

Appendix JA1 – Glossary

Term	Definition
ACCA	is the Air Conditioning Contractors of America.
ACCA MANUAL J	is the Air Conditioning Contractors of America document entitled "Manual J - Residential Load Calculation, Eighth Edition" (2003).
ACCENT (LIGHT)	is a directional luminaire designed to highlight or spotlight objects. It can be recessed, surface mounted, or mounted to a pendant, stem, or track.
ACCEPTANCE REQUIREMENTS FOR CODE COMPLIANCE	is a description of test procedures in the Nonresidential ~~ACM Manual~~Appendices that includes equipment and systems to be tested, functions to be tested, conditions under which the test shall be performed, the scope of the tests, results to be obtained, and measurable criteria for acceptable performance.
ACCESSIBLE	is having access thereto, but which first may require removal or opening of access panels, doors, or similar obstructions.
ACM	See *Alternative Calculation Method*.
ACP	See *Alternative Component Package*.
ADDITION	is any change to a building that increases conditioned floor area and conditioned volume. Addition is also any change that increases the floor area or volume of an unconditioned building of an occupancy group or type regulated by Part 6. Addition is also any change that increases the illuminated area of an outdoor lighting application regulated by Part 6. See *Newly Conditioned Space*
AFUE	See *Annual Fuel Utilization Efficiency.*
AGRICULTURAL BUILDING	is a structure designed and constructed to house farm implements, hay, grain, poultry, livestock or other horticultural products. It is not a structure that is a place of human habitation, a place of employment where agricultural products are processed, treated or packaged, or a place used by the public.
AIR POROSITY	is a measure of the air-tightness of infiltration barriers in units of cubic feet per hour per square foot per inch of mercury pressure difference.
AIRFLOW ACROSS THE EVAPORATOR	is the rate of airflow, usually measured in cfm across a heating or cooling coil. The efficiency of air conditioners and heat pumps is affected by the airflow across the evaporator (or condenser in the case of a heat pump). See *Thermostatic Expansion Valves (TXV)*.

Term	Definition
AIR-TO-AIR HEAT EXCHANGER	is a device which will reduce the heat losses or gains ~~which~~that occur when a building is mechanically ventilated, by transferring heat between the conditioned air being exhausted and ~~the unconditioned~~outside air being supplied.
ALTERATION	is any change to a building's water~~-~~-heating system, space~~-~~-conditioning system, lighting system, or ~~building~~ envelope that is not an addition. Alteration is also any change that is regulated by Part 6 to an outdoor lighting system that is not an addition. Alteration is also any change that is regulated by Part 6 to signs located either indoors or outdoors.
ALTERNATIVE CALCULATION ~~METHOD~~ *METHODS APPROVAL MANUAL* ~~OR ACM MANUAL~~	~~is the Alternative Calculation Method (ACM) Approval Manual for the 2001 Energy Efficiency Standards for Nonresidential Buildings, (P400-01-011) for nonresidential buildings, hotels, and multi-family residential buildings with four or more stories and the Alternative Calculation Method (ACM) Approval Manual for the 2001 Energy Efficiency Standards for Residential Buildings, (P400-01-012) for all single family and low-rise multi-family residential buildings.~~is the document that specifies the procedures and tests required for approval of Alternative Calculation Methods.
ALTERNATIVE CALCULATION METHODS (ACMS)	are the Commission's Public Domain Computer Programs, one of the Commission's Simplified Calculation Methods, or any other calculation method approved by the Commission. ACMs are also referred to as compliance software.
ALTERNATIVE COMPONENT PACKAGE	is one of the sets of low-rise residential prescriptive requirements contained in Section 151(f). Each package is a set of measures that achieve a level of performance~~, which~~ that meets the S~~s~~tandards. These are often referred to as the prescriptive packages or packages. "Buildings that comply with the prescriptive standards shall be designed, constructed and equipped to meet all of the requirements of one of the alternative packages of components shown in Tables 151-B and 151-C for the appropriate climate zone..."
ANNUAL FUEL UTILIZATION EFFICIENCY (AFUE)	is a measure of the percentage of heat from the combustion of gas or oil which is transferred to the space being heated during a year, as determined using the applicable test method in the Appliance Efficiency Regulations or Section 112.
ANNUNCIATED	is a type of visual signaling device that indicates the on, off, or other status of a load.
ANSI	is the American National Standards Institute.
ANSI Z21.10.3	is the American National Standards Institute document entitled “Gas Water Heaters, Volume I, Storage Water Heaters with input ratings above 75,000 Btu per hour,” 2001 (ANSI Z21.10.3-2001).
ANSI Z21.13	is the American National Standards Institute document entitled “Gas-Fired Low Pressure Steam and Hot Water Boilers,” 2000 (ANSI Z21.13-2000).

Term	Definition
ANSI Z21.40.4	is the American National Standards Institute document entitled "Performance Testing and Rating of Gas-Fired, Air Conditioning and Heat Pump Appliances," 1996 (ANSI Z21.40.4-1996).
ANSI Z21.47	is the American National Standards Institute document entitled "Gas-Fired Central Furnaces," 2001 (ANSI Z21.47-2001).
ANSI Z83.8	is the American National Standards Institute document entitled "Gas Unit Heaters and Gas-Fired Duct Furnaces," 2002 (ANSI Z83.8 -2002).
APPLIANCE STANDARDS	are the Standards contained in the Appliance Efficiency Regulations.
APPROVED	as to a home energy rating provider or home energy rating system, is reviewed and approved by the Commission under Title 20, Section 1675 of the California Code of Regulations.
APPROVED BY THE COMMISSION	means approval under Section 25402.1 of the Public Resources Code.
APPROVED CALCULATION METHOD	~~is a Public Domain Computer Program approved under Section 10-109 (a), or any Alternative Calculation Method approved under Section 10-109 (b).~~ See *Alternative Calculation Method~~.~~s.*
AREAL HEAT CAPACITY	See *Heat Capacity.*
ARI	is the Air-~~Conditioning~~conditioning and Refrigeration Institute.
ARI 210/240	is the Air-conditioning and Refrigeration Institute document entitled "Unitary Air-Conditioning and Air-Source Heat Pump Equipment," 2003 (ARI 210/240-~~94~~2003).
ARI 310/380	is the Air-conditioning and Refrigeration Institute document entitled "Packaged Terminal Air-Conditioners and Heat Pumps," 1993 (ARI 310/380-93).
ARI 320	is the Air-conditioning and Refrigeration Institute document entitled "Water-Source Heat Pumps," 1998 (ARI 320-98).
ARI 325	is the Air-conditioning and Refrigeration Institute document entitled "Ground Water-Source Heat Pumps," 1998 (ARI 325-98).
ARI 340/360	is the Air-conditioning and Refrigeration Institute document entitled "Commercial and Industrial Unitary Air-Conditioning and Heat Pump Equipment," 2000 (ARI 340/360-2000).
ARI 365	is the Air-conditioning and Refrigeration Institute document entitled, "Commercial and Industrial Unitary Air-Conditioning Condensing Units," 2002 (ARI 365-2002).
ARI 460	is the Air-conditioning and Refrigeration Institute document entitled "Remote Mechanical-Draft Air-Cooled Refrigerant Condensers," 2000 (ARI 460-2000).

Term	Definition
ARI 550/590	is the Air-conditioning and Refrigeration Institute document entitled “Standard for Water Chilling Packages Using the Vapor Compression Cycle,” 1998 (ARI 550/590-98).
ARI 560	is the Air-conditioning and Refrigeration Institute document entitled “Absorption Water Chilling and Water Heating Packages,” 2000 (ARI 560-2000).
ASHRAE	is the American Society of Heating, Refrigerating, and Air-~~Conditioning~~conditioning Engineers.
ASHRAE 55	is the American Society of Heating, Refrigerating and Air-Conditioning Engineers document entitled " Thermal Environmental Conditions for Human Occupancy,” 1992 (ASHRAE Standard 55-1992).
ASHRAE CLIMATIC DATA FOR REGION X	is the American Society of Heating, Refrigerating and Air-Conditioning Engineers document entitled "ASHRAE Climatic Data for Region X, Arizona, California, Hawaii and Nevada,” Publication SPCDX, 1982 and “Supplement,” 1994.
ASHRAE HANDBOOK, APPLICATIONS VOLUME	is the American Society of Heating, Refrigerating and Air-Conditioning Engineers document entitled "ASHRAE Handbook: Heating, Ventilating, and Air-Conditioning Applications" (2003).
ASHRAE HANDBOOK, EQUIPMENT VOLUME	is the American Society of Heating, Refrigerating and Air-Conditioning Engineers document entitled "ASHRAE Handbook: Heating, Ventilating, and Air-Conditioning Systems and Equipment" (2000).
ASHRAE HANDBOOK, FUNDAMENTALS VOLUME	is the American Society of Heating, Refrigerating and Air-Conditioning Engineers document entitled "ASHRAE Handbook: Fundamentals" (2001).
ASME	is the American Society of Mechanical Engineers.
ASTM	is the American Society for Testing and Materials.
ASTM C1167	is the American Society for Testing and Materials document entitled “Standard Specification for ~~Concrete Brick,” 2001~~Clay Roof Tiles,” 1996 (ASTM ~~C55-01~~C1167-96).
ASTM C1371	is the American Society for Testing and Materials document entitled “Standard Test Method for ~~Steady-State Heat Flux Measurements and Thermal Transmission Properties by Means~~Determination of ~~the Guarded-Hot-Plate Apparatus,” 1997~~Emittance of Materials Near Room Temperature Using Portable Emissometers,” 1998 (ASTM ~~C177-97~~C1371-98).
ASTM C1583	is the American Society ~~for~~ of Testing and Materials document entitled, “Standard Test Method for ~~Water Absorption of Core~~Tensile Strength of Concrete Surfaces and the Bond Strength or Tensile Strength of Concrete Repair and Overlay Materials ~~for Structural Sandwich Constructions,” 2001~~by Direct Tension (Pull-off Method),” 2004 (ASTM ~~C272-01~~C1583-04).

Term	Definition
ASTM C177	is the American Society for Testing and Materials document entitled "Standard Test Method for Steady-State Heat ~~Transfer~~Flux Measurements and Thermal Transmission Properties by Means of ~~Horizontal Pipe Insulation," 1995~~the Guarded-Hot-Plate Apparatus," 1997 (ASTM ~~C335-95~~C177-97).
ASTM ~~C518~~C272	is the American Society for Testing and Materials document entitled "Standard Test Method for ~~Steady-State Thermal Transmission Properties by Means~~Water Absorption of ~~the Heat Flow Meter Apparatus," 2002~~Core Materials for Structural Sandwich Constructions," 2001 (ASTM ~~C518-02~~C272-01).
ASTM C335	is the American Society for Testing and Materials document entitled "Standard Test Method for ~~Extrudability, After Package Aging~~Steady-State Heat Transfer Properties of ~~Latex Sealants," 2000~~Horizontal Pipe Insulation," 1995 (ASTM ~~C731-00~~C335-95).
ASTM C518	is the American Society for Testing and Materials document entitled "Standard Test Method for ~~Aging Effects~~Steady-State Thermal Transmission Properties by Means of ~~Artificial Weathering on Latex Sealants," 2001~~the Heat Flow Meter Apparatus," 2002 (ASTM ~~C732-01~~C518-02).
ASTM C55	is the American Society for Testing and Materials document entitled "Standard Specification for ~~Clay Roof Tiles," 1996~~Concrete Brick," 2001 (ASTM ~~C1167-96~~C55-01).
ASTM C731	is the American Society for Testing and Materials document entitled "Standard Test Method for ~~Determination~~Extrudability, After Package Aging of ~~Emittance of Materials Near Room Temperature Using Portable Emissometers," 1998~~Latex Sealants," 2000 (ASTM ~~C1371-98~~C731-00).
ASTM C732	is the American Society ~~of~~ for Testing and Materials document entitled~~,~~ "Standard ~~Practice for Filtered Open-Flame Carbon-Arc Exposures of Paint and Related Coatings~~Test Method for Aging Effects of Artificial Weathering on Latex Sealants," 2001 (ASTM ~~D822~~C732-01).
ASTM C836	is the American Society of Testing and Materials document entitled, "Standard Specification for High Solids Content, Cold Liquid-Applied Elastomeric Waterproofing Membrane for Use with Separate Wearing Course," 2005 (ASTM C836-05).
ASTM D1003	is the American Society for Testing and Materials document entitled "Standard Test Method for Haze and Luminous Transmittance of Transparent Plastics," 2000 (ANSI/ASTM D1003-00).

Term	Definition
ASTM D1653	is the American Society of Testing and Materials document entitled, "Standard ~~Specification~~Test Methods for ~~Aluminum-Pigmented Asphalt Roof Coatings, Nonfibered, Asbestos Fibered, and Fibered without Asbestos," 2002~~Water Vapor Transmission of Organic Coating Films," 2003 (ASTM ~~D2824-02~~D1653-03).
ASTM D2370	is the American Society of Testing and Materials document entitled, "Standard ~~Guide~~Test Method for ~~Application~~Tensile Properties of ~~Aluminum-Pigmented Asphalt Roof~~Organic Coatings," ~~1997~~2002 [ASTM ~~D3805-97 (reapproved 2003)].~~ D2370-98 (2002)].
ASTM D2824	~~Is~~is the American Society of Testing and Materials document entitled~~,~~ "Standard Specification for Aluminum-Pigmented ~~Emulsified Asphalt Used as a Protective Coating for Roofing~~ Asphalt Roof Coatings, Nonfibered, Asbestos Fibered, and Fibered without Asbestos," 2002 (ASTM ~~D6848~~D2824-02).
ASTM D3468	is the American Society ~~for~~ of Testing and Materials document entitled, "Standard ~~Test Methods for Water Vapor Transmission of Materials," 2000~~Specification for Liquid-Applied Neoprene and Chlorosulfonated Polyethylene Used in Roofing and Waterproofing," 1999 (ASTM ~~E96-00~~D3468-99).
ASTM D3805	is the American Society ~~for~~ of Testing and Materials document entitled "Standard ~~Test Method for Determining the Rate of Air Leakage Through Exterior Windows, Curtain Walls, and Doors Under Specified Pressure Differences Across the Specimen," 1991 [~~Guide for Application of Aluminum-Pigmented Asphalt Roof Coatings," 1997 (ASTM ~~E283-91(1999)].~~D3805-97 (reapproved 2003)).
ASTM D4798	is the American Society for Testing and Materials document entitled~~,~~ "Standard Test Method~~s~~ for ~~Total Normal Emittance of Surfaces Using Inspection-Meter Techniques," 1971 [~~Accelerated Weathering Test Conditions and Procedures for Bituminous Materials (Xenon-Arc Method)," 2001 (ASTM ~~E408-71(2002)].~~D4798-01).
ASTM D522	is the American Society of Testing and Materials document entitled, "Standard Test Methods for Mandrel Bend Test of Attached Organic Coatings," 2001 [ASTM D522-93a (2001)].
ASTM D5870	is the American Society of Testing and Materials document entitled, "Standard Practice for Calculating Property Retention Index of Plastics," 2003 [ASTM D5870-95 (2003)].
ASTM D6083	is the American Society of Testing and Materials document entitled, "Standard Specification for Liquid Applied Acrylic Coating Used in Roofing," 2005 (ASTM D6083-05e1).
ASTM D6694	is the American Society of Testing and Materials document entitled, "Standard Specification for Liquid-Applied Silicone Coating Used in Spray Polyurethane Foam Roofing," 2001 (ASTM D6694-01).

Term	Definition
ASTM D6848	is the American Society of Testing and Materials document entitled "Standard Specification for Aluminum-Pigmented Emulsified Asphalt Used as a Protective Coating for Roofing," 2002 (ASTM D6848-02).
ASTM D822	is the American Society of Testing and Materials document entitled, "Standard Practice for Filtered Open-Flame Carbon-Arc Exposures of Paint and Related Coatings," 2001 (ASTM D822-01).
ASTM E283	is the American Society for Testing and Materials document entitled "Standard Test Method for Determining the Rate of Air Leakage Through Exterior Windows, Curtain Walls, and Doors Under Specified Pressure Differences Across the Specimen," 1991 (ASTM E283-91(1999)).
ASTM E408	is the American Society for Testing and Materials document entitled, "Standard Test Methods for Total Normal Emittance of Surfaces Using Inspection-Meter Techniques," 1971 (ASTM E408-71(2002)).
ASTM E96	is the American Society for Testing and Materials document entitled "Standard Test Methods for Water Vapor Transmission of Materials," 200 (ASTM E96-00).
ATRIUM	is a large-volume space created by openings connecting two or more stories and is used for purposes other than an enclosed stairway, an elevator hoistway, an escalator opening, or as a utility shaft for plumbing, electrical, air-conditioning or other equipment, and is not a mall.
ATTIC	is an enclosed unconditioned space directly below the roof and above the ceiling.
AUDITORIUM~~:~~	See ~~*Occupancy*~~*Nonresidential Functional Area or Type of Use*.
AUTO REPAIR~~:~~	See ~~*Occupancy*~~*Nonresidential Functional Area or Type of Use*.
AUTOMATED TELLER MACHINE (ATM)	is any electronic information processing device which accepts or dispenses currency in connection with a credit, deposit, or convenience account without involvement by a clerk.
AUTOMATIC	is capable of operating without human intervention.
AUTOMATIC MULTI-LEVEL DAYLIGHTING CONTROL	is a multi-level lighting control that automatically reduces lighting in multiple steps or continuous dimming in response to available daylight. This control uses one or more ~~photocontrols~~photosensors to detect changes in daylight illumination and then change the electric lighting level in response to the daylight changes.
AUTOMATIC TIME SWITCH CONTROL DEVICES	are devices capable of automatically turning loads off and on based on time schedules.

Term	Definition
BACK	is the back side of the building as one faces the front ~~facade~~façade from the outside (see *Front*). This designation is used on the Certificate of Compliance (CF-1R form) to indicate the orientation of fenestration (e.g., Back-West).
BATHROOM	~~is a room containing a shower, tub, toilet or a sink that is used for personal hygiene.~~See *Residential Space Type*.
BELOW-GRADE WALL	is the portion of a wall, enclosing conditioned space~~,~~ that is below the grade line.
BRITISH THERMAL UNIT (BTU)	is the amount of heat needed to raise the temperature of one pound of water one degree Fahrenheit.
BTU/H	is the amount of heat in Btu that is removed or added during one hour. Used for measuring heating and cooling equipment output.
BUILDER	is the general contractor responsible for construction
BUILDING	is any structure or space ~~for which a permit is sought.~~covered by Section 100 of the Building Energy Efficiency Standards.
BUILDING DEPARTMENT	is the city, county or state agency responsible for approving the plans, issuing a building permit and approving occupancy of the dwelling unit.
BUILDING ENERGY EFFICIENCY STANDARDS	are the California Building Energy Efficiency Standards as set forth in the California Code of Regulations, Title 24, Part 6. Also known as the *California Energy Code.*
BUILDING ENTRANCE	See *Outdoor Lighting*.
BUILDING ENVELOPE	is the ensemble of exterior and demising partitions of a building that enclose conditioned space.
BUILDING FAÇADE	See *Outdoor Lighting*.

Term	Definition
BUILDING LOCATION DATA	is the specific outdoor design temperatures shown in Joint Appendix II used in calculating heating and cooling loads for the particular location of the building~~.~~ ~~For heating, the outdoor design temperature shall be the Winter Median of Extremes value. A higher temperature may be used, but lower values are not permitted.~~ ~~For low-rise residential buildings for cooling, the outdoor design temperatures shall be the 1.0 percent Cooling Dry Bulb and Mean Coincident Wet Bulb values. Lower temperatures may be used, but higher values are not permitted. Temperatures are interpolated from the 0.5% and 2.0% values in the ASHRAE publication, *Climatic Data for Region X,* 1982 edition and 1994 supplement (see Joint Appendix II).~~ ~~For nonresidential buildings, high-rise residential buildings and hotels/motels for cooling, the outdoor design temperatures shall be the 0.5 percent Cooling Dry Bulb and Mean Coincident Wet Bulb. For cooling towers the outdoor design temperatures shall be the 0.5 percent Cooling Design Wet Bulb values. Lower temperatures may be used, but higher values are not permitted.~~ ~~If a building location is not listed, the local enforcement agency may determine the location for which outdoor design temperature data is available that is closest to the actual building site.~~.
BUILDING OWNER	is the owner of the building or dwelling unit.
BUILDING PERMIT	is an electrical, plumbing, mechanical, building, or other permit or approval, that is issued by an enforcement agency, and that authorizes any construction that is subject to Part 6.
BUILDING TYPES	is the classification of buildings defined by the *CBC* and applicable to the requirements of the *Energy Efficiency Standards.*
CABINET SIGN	See *Sign.*
CALIFORNIA ELECTRICAL CODE	is the 2006 California Electrical Code.
CALIFORNIA ENERGY CODE	See *Building Energy Efficiency Standards.*
CALL CENTER	is a phone center that handles large number of phone calls including but not limited to help desk, customer and sales support, technical support, emergency response, telephone answering service, and inbound and outbound telemarketing.
CANOPY	See *Outdoor Lighting.*
CAPTIVE-KEY OVERRIDE	is a type of lighting control in which the key that activates the override cannot be released when the lights are in the on position.
CBC	is the 2006 California Building Code. ~~CBC is the 2001 California Building Code.~~.

Term	Definition
CEILING	is the interior upper surface of a space separating it from an attic, plenum, indirectly or directly conditioned space or the roof assembly, which has a slope less than 60 degrees from horizontal.
CENTER OF GLASS U-FACTOR:	is the U-factor for the glass portion only of vertical or horizontal fenestration and is measured at least two and one half inches from the frame. Center of glass U-factor does not consider the U-factor of the frame. Center of glass U-factor is not used in Title 24 compliance.
CERTIFICATE OF COMPLIANCE ~~(CF-1R)~~	is a document with information required by the Commission that is prepared by the Documentation Author that indicates whether the building includes measures that require field verification and diagnostic testing.
CERTIFICATE OF FIELD VERIFICATION AND DIAGNOSTIC TESTING ~~(CF-4R)~~	is a document with information required by the Commission that is prepared by the HERS Rater to certify that measures requiring field verification and diagnostic testing comply with the requirements.
CERTIFICATION	is certification by the manufacturer to the Commission, as specified the Appliance Efficiency Regulations~~,~~, that the appliance complies with the applicable standard for that appliance. The Commission's database of certified heating appliances can be accessed by contacting the Commission Energy Hotline or from the Commission's website at http://www.energy.ca.gov/efficiency/appliances/index.html. The term certification is also used in other ways in the standards. Many of the compliance forms are certificates, whereby installers, HERS testers and others certify that equipment was correctly installed and/or tested.
CERTIFIED	as to a home energy rater, is having been found by a certified home energy rating provider to have successfully completed the requirements established by that home energy rating provider.
CERTIFYING ORGANIZATION	is an independent organization recognized by the ~~Commission~~commission to certify manufactured devices for performance values in accordance with procedures adopted by the ~~Commission.~~commission.
CHANDELIER	~~See *Ornamental Chandeliers*.~~is a ceiling-mounted , close-to-ceiling, or suspended decorative luminaire that uses glass, crystal, ornamental metals, or other decorative material and that typically is used in hotel/motels, restaurants, or churches as a significant element in the interior architecture
CHANNEL LETTER SIGN	See *Sign*
CIVIC MEETING SPACE	See ~~*Occupancy*~~*Nonresidential Functional Area or Type of Use*.
CLASSROOM, LECTURE, TRAINING, VOCATIONAL ROOM	See ~~*Occupancy*~~*Nonresidential Functional Area or Type of Use*.

Term	Definition
CLIMATE ZONES	are the 16 geographic areas of California for which the Commission has established typical weather data, prescriptive packages and energy budgets. Climate zone boundary descriptions are in the document "California Climate Zone Descriptions" (July 1995), incorporated herein by reference.
CLOSED-CIRCUIT COOLING TOWER	is a closed-circuit cooling tower that utilizes indirect contact between a heated fluid, typically water or glycol, and the cooling atmosphere to transfer the source heat load indirectly to the air, essentially combining a heat exchanger and cooling tower into one relatively compact device.
CLTD	is the Cooling Load Temperature Difference.
CMC	is the ~~2001~~2006 California Mechanical Code.
CODEC, CEC	is the 2006 California Electric Code.
CODES, CALIFORNIA HISTORICAL BUILDING CODE	is the California Historical Building Code, California Code of Regulations, Title 24, Part 8 and Part 2 (Chapter 34).
CODES, CBC	is the 2006 California Building Code.
CODES, CMC	is the 2006 California Mechanical Code.
COEFFICIENT OF PERFORMANCE (COP), COOLING,	is the ratio of the rate of net heat removal to the rate of total energy input, calculated under designated operating conditions and expressed in consistent units, as determined using the applicable test method in the Appliance Efficiency Regulations or Section 112.
COEFFICIENT OF PERFORMANCE (COP), ~~HEATING,~~*HEAT PUMP*	is the ratio of the rate of ~~net~~useful heat output delivered by the complete heat pump unit (exclusive of supplementary heating) to the corresponding rate of ~~total~~ energy input, ~~calculated under designated operating conditions and expressed~~ in consistent units~~,~~ and as determined using the applicable test method in ~~the~~ Appliance Efficiency Regulations or Section 112 **.**
COEFFICIENT OF PERFORMANCE (COP), HEATING,	is the ratio of the rate of net heat output to the rate of total energy input, calculated under designated operating conditions and expressed in consistent units, as determined using the applicable test method in the Appliance Efficiency Regulations or Section 112.
COMBINATION SPACE-HEATING AND WATER-HEATING APPLIANCE	is an appliance that is designed to provide both space heating and water heating from a single primary energy source.
COMBINED HYDRONIC SPACE/WATER HEATING SYSTEM	is a system which both domestic hot water and space heating is supplied from the same water heating equipment. Combined hydronic space heating may include both radiant floor systems and convective or fan coil systems.
COMBUSTION EFFICIENCY	is a measure of the percentage of heat from the combustion of gas or oil that is transferred to the space being heated or lost as jacket loss.

Term	Definition
COMMISSION	is the California State Energy Resources Conservation and Development Commission. ~~, also known as the California Energy Commission.~~
COMPLETE BUILDING	See *Entire Building*.
COMPLIANCE APPROACH	is any one of the allowable methods by which the design and construction of a building may be demonstrated to be in compliance with Part 6. The compliance approaches are the performance compliance approach and the prescriptive compliance approach. The requirements for each compliance approach are set forth in Section 100(e) 2.D.ii.of Part 6.
COMPLIANCE DOCUMENTATION	are the set of forms and other data prepared in order to demonstrate to the building official that a building complies with the Standards. The compliance forms for the residential and nonresidential standards are contained in the Residential Manual and the Nonresidential Manual.
CONDITIONED FLOOR AREA (CFA)	is the floor area (in square feet) of enclosed conditioned space on all floors of a building, as measured at the floor level of the exterior surfaces of exterior walls enclosing the conditioned space.
CONDITIONED FOOTPRINT	is a projection of all conditioned space on all floors to a vertical plane. The conditioned footprint area may be equal to the first floor area, or it may be greater, if upper floors project over lower floors. One way to think of the conditioned footprint area is as the area of the largest conditioned floor in the building plus the conditioned floor area of any projections from other stories that extend beyond the outline of that largest floor.
CONDITIONED SPACE	is space in a building that is either directly conditioned or indirectly conditioned.
CONDITIONED SPACE, DIRECTLY	is an enclosed space that is provided with wood heating, is provided with mechanical heating that has a capacity exceeding 10 Btu/hr-ft^2), or is provided with mechanical cooling that has a capacity exceeding 5 Btu/hr-ft^2, unless the space-conditioning system is designed for a process space.
CONDITIONED SPACE, INDIRECTLY	is enclosed space, including, but not limited to, unconditioned volume in atria, that (1) is not directly conditioned space; and (2) either (a) has a thermal transmittance area product (UA) to directly conditioned space exceeding that to the outdoors or to unconditioned space and does not have fixed vents or openings to the outdoors or to unconditioned space, or (b) is a space through which air from directly conditioned spaces is transferred at a rate exceeding three air changes per hour.
CONDITIONED VOLUME	is the total volume (in cubic feet) of the conditioned space within a building.

Term	Definition
CONSTRUCTION LAYERS	are roof, wall and floor constructions which represent an assembly of layers. Some layers are homogeneous, such as gypsum board and plywood sheathing, while other layers are non-homogeneous such as the combination of wood framing and cavity insulation typical in many buildings.
CONTINUOUS DIMMING	~~is a lighting control method that is capable of varying the light output of lamps over a continuous range from full light output to minimum light output.~~See *Dimming, Continuous*.
CONTROLLED VENTILATION CRAWL SPACE (CVC)	is a crawl space in a residential building where the side walls of the crawlspace are insulated rather than the floor above the crawlspace. A CVC has automatically controlled crawl space vents. Credit for a CVC is permitted for low-rise residential buildings that use the performance approach to compliance.
CONVENTION CENTERS	See ~~*Occupancy*~~*Nonresidential Functional Area or Type of Use*.
COOL ROOF	is a roofing material with high thermal emittance and high solar reflectance, or low~~er~~ thermal emittance and exceptionally high solar reflectance as specified in Section 118 (i)~~,~~ that reduces heat gain through the roof.
COOL ROOF RATING COUNCIL (CRRC)	is a not-for-profit organization designated by the Commission as the Supervisory Entity with responsibility to rate and label the reflectance and emittance of roof products.
COOLING EQUIPMENT	is equipment used to provide mechanical cooling for a room or rooms in a building.
COOLING LOAD	is the rate at which heat must be extracted from a space to maintain a desired room condition.
COOLING LOAD TEMPERATURE DIFFERENCE (CLTD)	is an equivalent temperature difference used for calculating the instantaneous external cooling loads across a wall or roof. The cooling load is the CLTD x U-factor x Area.
COP	See *Coefficient of Performance*.
CORRIDOR	See ~~*Occupancy*~~*Nonresidential Functional Area or Type of Use*.
COURTYARD	is an open space through one or more floor levels surrounded by walls within a building.
CRAWL SPACE	is a space immediately under the first floor of a building adjacent to grade.
CRRC	See *Cool Roof Rating Council*.
CRRC-1	is the Cool Roof Rating Council document entitled "Product Rating Program Manual." (2002)~~.~~
CTI	is the Cooling ~~Tower~~ Technology Institute.
CTI ATC-105	is the Cooling ~~Tower~~Technology Institute document entitled "Acceptance Test Code for Water Cooling Towers," 2000 (CTI ATC-105-00).

Term	Definition
CTI STD-201	is the Cooling ~~Tower~~ Technology Institute document entitled "Standard for the Certification ~~Standard for Commercial~~of Water-Cooling ~~Towers," 2002~~Tower Thermal Performance," 2004 (CTI STD-201-~~02~~04).
CURTAIN WALL	is an external nonbearing wall intended to separate the exterior and interior environments, which may consist entirely (or principally) of a combination of framing materials, glass and glazing, opaque in-fill and other surfacing materials supported by (or within) a framework.
CUSTOM ENERGY BUDGET	See *Energy Budget*.
C-VALUE (ALSO KNOWN AS C-FACTOR)	~~(also known as C-factor)~~ is the time rate of heat flow through unit area of a body induced by a unit temperature difference between the body surfaces, in Btu~~/~~ (hr. x ft.^{2} x °F). It is not the same as K-value or K-factor.
DAYLIGHT AREA	is the floor area under skylights or next to windows. The daylight area includes Primary Sidelit Daylight Area, Secondary Sidelit Daylight Area, and Skylit Daylight Area.
DAYLIGHT AREA, PRIMARY SIDELIT	is the floor area directly adjacent to vertical glazing. The Primary Sidelit Daylight Area is primary sidelit depth multiplied by the sidelit width. The sidelit width is the width of the window plus, on each side, the lesser of either 2 feet, the distance to a 60-inch or higher permanent partition or one half the distance to the closest skylight or vertical glazing. The primary sidelit depth is the horizontal distance perpendicular to the glazing which is the lesser of one window head height (head height is the distance from the floor to the top of the glazing), the distance to the nearest 60-inch or higher permanent partition, or one half the distance to the closest skylight or vertical glazing.
DAYLIGHT AREA, SKYLIT	is the rough opening of the skylight, plus, in each horizontal direction perpendicular to the sides of the skylight opening, extended horizontally of the lateral and longitudinal dimensions of the skylight, the lesser of 70% of the floor-to-ceiling height, the distance to any permanent partition or permanent rack which is farther away than 70% of the distance between the top of the permanent partition or permanent rack and the ceiling, or one half the horizontal distance to the edge of the closest skylight or vertical glazing,

Term	Definition
DAYLIGHT AREA. SECONDARY SIDELIT	is the floor area adjacent to the Primary Sidelit Daylight Area that is illuminated by vertical glazing The Secondary Sidelit Daylight Area is the secondary sidelit depth multiplied by the sidelit width. The sidelit width is the width of the window plus, on each side, the lesser of either 2 feet, the distance to a 60-inch or higher permanent partition or one half the distance to the closest skylight or vertical glazing. The secondary sidelit depth is the horizontal distance perpendicular to the glazing which begins from one window head height (head height is the distance from the floor to the top of the glazing,), and ends at the lesser of: two window head heights, the distance to the nearest 60-inch or higher permanent partition, or one half the distance to the closest skylight or vertical glazing.
DAYLIT AREA	is the floor area under skylights or next to windows. The daylight area includes Primary Sidelit Daylight Area, Secondary Sidelit Daylight Area, and Skylit Daylight Area. .~~is the floor area that is illuminated by daylight through vertical glazing or skylights as specified in Section 131(c).~~
DEADBAND	is the temperature range within which the HVAC system is neither calling for heating or cooling.
DECORATIVE GAS APPLIANCE	is a gas appliance that is designed or installed for visual effect only, cannot burn solid wood, and simulates a fire in a fireplace.
DEGREE DAY, HEATING,	is a unit, based upon temperature difference and time, used in estimating fuel consumption and specifying nominal annual heating load of a building. For any one day, when the mean temperature is less than 65°F, there exist as many degree days as there are Fahrenheit degrees difference in temperature between the mean temperature for the day and 65°F. The number of degree days for specific geographical locations are those listed in the Residential Manual. For those localities not listed in the Residential Manual, the number of degree days is as determined by the applicable enforcing agency.
DEMAND RESPONSE	is controlling electricity loads in buildings in response to an electronic signal sent by the local utility requesting their customers to reduce electricity consumption.
DEMAND RESPONSE PERIOD	is a period of time during which the local utility is curtailing electricity loads by sending out a demand response signal.
DEMAND RESPONSE SIGNAL	is an electronic signal sent out by the local utility indicating a request to their customers to curtail electricity consumption.
DEMAND RESPONSIVE LIGHTING CONTROL	is a control that reduces lighting power consumption in response to a demand response signal.
DEMISING PARTITION	is a wall, fenestration, floor, or ceiling that separates conditioned space from enclosed unconditioned space.
DEMISING WALL	is a wall that is a demising partition.

Term	Definition
DENSITY	is the mass per unit volume of a construction material as documented in an ASHRAE handbook, a comparably reliable reference or manufacturer's literature.
DEPLETABLE SOURCES	is energy obtained from electricity purchased from a public utility, or energy obtained from burning coal, oil, natural gas, or liquefied petroleum gases.
DESIGN CONDITIONS	are the parameters and conditions used to determine the performance requirements of space-conditioning systems. Design conditions for determining design heating and cooling loads are specified in Section 144 (b) for nonresidential, high-rise residential, and hotel/motel buildings and in Section 150 (h) for low-rise residential buildings.
DESIGN HEAT GAIN RATE	is the total calculated heat gain through the building envelope under design conditions.
DESIGN HEAT LOSS RATE	is the total calculated heat loss through the building envelope under design conditions.
DIMMING, CONTINUOUS	is a lighting control method that is capable of varying the light output of lamps over a continuous range from full light output to minimum light output.
DIMMING, STEPPED	is a lighting control method that varies the light output of lamps in one or more predetermined discrete steps between full light output and off.
DINING	See *Nonresidential Functional Area or Type of Use*.
DIRECT DIGITAL CONTROL (DDC)	is a type of control where controlled and monitored analog or binary data, such as temperature and contact closures, are converted to digital format for manipulation and calculations by a digital computer or microprocessor, then converted back to analog or binary form to control mechanical devices.
DIRECTLY CONDITIONED SPACE	is an enclosed space that is provided with wood heating, is provided with mechanical heating that has a capacity exceeding 10 Btu/(hr.×ft.^{2}), or is provided with mechanical cooling that has a capacity exceeding 5 Btu/(hr.×ft.^{2}), unless the space-conditioning system is designed and thermostatically controlled to maintain a process environment temperature less than 55°F or to maintain a process environment temperature greater than 90°F for the whole space that the system serves, or unless the space-conditioning system is designed and controlled to be incapable of operating at temperatures above 55°F or incapable of operating at temperatures below 90°F at design conditions.
DISPLAY LIGHTING	is lighting confined to the area of a display that provides a higher level of illuminance than the level of surrounding ambient illuminance.

Term	Definition
DISPLAY PERIMETER	is the length of an exterior wall in a Group B; Group F, Division 1; or Group M Occupancy that immediately abuts a public sidewalk, measured at the sidewalk level for each story that abuts a public sidewalk.
DIVIDERS	are wood, aluminum or vinyl glazing dividers including mullions, muntins, munnions and grilles. Dividers may truly divide lights, be between the panes, or be applied to the exterior or interior of the glazing.
DOCUMENTATION AUTHOR	is the person completing the compliance documentation that demonstrates whether a building complies with the standards. Compliance documentation requirements are defined in the Residential Manual.
DOMINANT OCCUPANCY	is the occupancy type in mixed occupancy buildings with the greatest percentage of total conditioned floor area.
DOOR	~~See *Exterior Door.*~~is an operable opening in the building envelope that is not a fenestration product, including swinging and roll-up doors, fire doors, and access hatches. Doors that are more than one-half glass in area are considered a fenestration product.
DORMITORY	is a building consisting of multiple sleeping quarters and having interior common areas such as dining rooms, reading rooms, exercise rooms, toilet rooms, study rooms, hallways, lobbies, corridors, and stairwells, other than high-rise residential, low-rise residential, and hotel/motel occupancies.
DOUBLE-FACED SIGN	See *Sign.*
DUAL-GLAZED GREENHOUSE WINDOWS	are a type of dual-glazed fenestration product which adds conditioned volume but not conditioned floor area to a building.
DUCT LOSSES	is heat transfer into or out of a space conditioning system duct through conduction or leakage.
DUCT SEALING	is a procedure for installing a space conditioning distribution system that minimizes leakage of air from or to the distribution system. Minimum specifications for installation procedures, materials, diagnostic testing and field verification are contained in the Residential Appendix RA3 and the Nonresidential ~~ACM Approval Manuals.~~Appendix NA2.
DWELLING UNIT	is a dwelling unit within a multifamily building project or a single family building.
EA	is Effective Aperture.
EAST-FACING	See *Orientation.*
ECONOMIZER, AIR,	is a ducting arrangement, including dampers, linkages, and an automatic control system, that allows a cooling supply fan system to supply outside air to reduce or eliminate the need for mechanical cooling.

Term	Definition
ECONOMIZER, WATER,	is a system by which the supply air of a cooling system is cooled directly or indirectly by evaporation of water, or other appropriate fluid, in order to reduce or eliminate the need for mechanical cooling.
EDGE OF GLASS:	is the portion of fenestration glazing that is within two and one half inches of the spacer.
EER	See *Energy Efficiency Ratio.*
EFFECTIVE APERTURE (EA)	is a measure of the extent that vertical glazing or skylights are effective for providing daylighting. ~~The effective aperture for vertical glazing is specified in Exception 1 to Section 131(c). The effective aperture for skylights is specified in Section 146 (a) 4 F.~~
EFFICACY, LAMP	is the quotient of rated initial lamp lumens divided by the rated lamp power (watts), without including auxiliaries such as ballasts, ~~measured at 25°C according to IESNA~~transformers, and ~~ANSI Standards.~~power supplies.
EFFICACY, LIGHTING SYSTEM	is the quotient of rated initial lamp lumens measured at 25°C according to IESNA and ANSI Standards, times the ballast factor, divided by the input power (watts) to the ballast or other auxiliary device (e.g. transformer); expressed in lumens per watt.
ELECTRIC HEATING	is an electrically powered heating source, such as electric resistance, heat pumps with no auxiliary heat or with electric auxiliary heat, solar with electric back-up, etc..
ELECTRIC RESISTANCE HEATING	is a heating system that converts electric energy directly into heat energy by passing a current through an electric resistance. Electric resistance heat is inherently less efficient than gas as a heating energy source because it must account for losses associated with generation from depletable fossil fuels and transmission to the building site.
ELECTRICAL/ MECHANICAL ROOM	See ~~*Occupancy*~~*Nonresidential Functional Area or Type of Use.*
ELECTRONICALLY-COMMUTATED MOTOR	is a brushless DC motor with a permanent magnet rotor that is surrounded by stationary motor windings, and an electronic controller that varies rotor speed and direction by sequentially supplying DC current to the windings.
EMITTANCE, THERMAL	is the ratio of the radiant heat flux emitted by a sample to that emitted by a blackbody radiator at the same temperature.
ENCLOSED SPACE	is space that is substantially surrounded by solid surfaces~~.~~, including walls, ceilings or roofs, doors, fenestration areas, and floors or ground.
ENERGY BUDGET	is the maximum amount of Time Dependent Valuation (TDV) energy that a proposed building, or portion of a building, can be designed to consume, calculated with the approved procedures specified in Title 24, Part 6.

Term	Definition
ENERGY EFFICIENCY RATIO (EER)	is the ratio of net cooling capacity (in Btu/hr.) to total rate of electrical energy input (in watts), of a cooling system under designated operating conditions, as determined using the applicable test method in the Appliance Efficiency Regulations or Section 112.
ENERGY EFFICIENCY STANDARDS	See *Building Energy Efficiency Standards*
ENERGY FACTOR (EF)	~~is the ratio of energy output to energy consumption~~ of a water heater~~, expressed in equivalent units, under designated operating conditions over~~ is a ~~24-hour use cycle~~measure of overall water heater efficiency, , as determined using the applicable test method in the Appliance Efficiency Regulations.
ENERGY MANAGEMENT CONTROL SYSTEM (EMCS)	is often a computerized control system designed to regulate the energy consumption of a building by controlling the operation of energy consuming systems, such as the heating, ventilation and air conditioning (HVAC), lighting and water heating systems. The EMCS is also capable of monitoring environmental and system loads and adjusting HVAC operations in order to optimize energy usage and respond to demand response signals.
ENERGY OBTAINED FROM DEPLETABLE SOURCES	is electricity purchased from a public utility, or any energy obtained from coal, oil, natural gas, or liquefied petroleum gases.
ENERGY OBTAINED FROM NONDEPLETABLE SOURCES	is energy that is not energy obtained from depletable sources.
ENFORCEMENT AGENCY	is the city, county, or state agency responsible for issuing a building permit.
ENTIRE BUILDING	is the ensemble of all enclosed space in a building, including the space for which a permit is sought, plus all existing conditioned and unconditioned space within the structure.
ENVELOPE	See *Building Envelope*.
EVAPORATIVE COOLER	provides cooling to a building by either direct contact with water (direct evaporative cooler), no direct contact with water (indirect evaporative cooler), or a combination of direct and indirect cooling (indirect/direct evaporative cooler). The credit offered for evaporative coolers depends on building type and climate.
EXCEPTIONAL METHOD	is a method approved by the Commission that analyzes designs, materials, or devices, which cannot be adequately modeled using alternative calculation methods.
EXECUTIVE DIRECTOR	is the Executive Director of the Commission.
EXERCISE CENTER / GYMNASIUM	See ~~*Occupancy*~~*Nonresidential Functional Area or Type of Use*.

Term	Definition
EXFILTRATION	is uncontrolled outward air leakage from inside a building, including leakage through cracks and interstices, around windows and doors, and through any other exterior partition or duct penetration.
EXHIBIT	See *~~Occupancy~~Nonresidential Functional Area or Type of Use*.
EXPOSED THERMAL MASS	is mass that is directly exposed (uncovered) to the conditioned space of the building. Concrete floors that are covered by carpet are not considered exposed thermal mass.
EXTERIOR DOOR	is a door through an exterior partition that is opaque or has a glazed area that is less than or equal to one-half of the door area. Doors with a glazed area of more than one half of the door area are treated as a fenestration product.
EXTERIOR FLOOR/SOFFIT	is a horizontal exterior partition, or a horizontal demising partition, under conditioned space. For low-rise residential occupancies, exterior floors also include those on grade.
EXTERIOR PARTITION	is an opaque, translucent, or transparent solid barrier that separates conditioned space from ambient air or space that is not enclosed. For low-rise residential occupancies, exterior partitions also include barriers that separate conditioned space from unconditioned space, or the ground.
*EXTERIOR ROOF/CEILING_*	is an exterior partition, or a demising partition, that has a slope less than 60 degrees from horizontal, that has conditioned space below, and that is not an exterior door or skylight.
EXTERIOR ROOF/CEILING AREA	is the area of the exterior surface of exterior roof/ceilings.
EXTERIOR WALL	is any wall or element of a wall, or any member or group of members, which defines the exterior boundaries or courts of a building and which has a slope of 60 degrees or greater with the horizontal plane. An exterior wall or partition is not an exterior floor/soffit, exterior door, exterior roof/ceiling, window, skylight, or demising wall.
EXTERIOR WALL AREA	is the area of the opaque exterior surface of exterior walls.
EXTERNALLY ILLUMINATED SIGN	See *Sign.*
FACTORY ASSEMBLED COOLING TOWERS	are cooling towers constructed from factory--assembled modules either shipped to the site in one piece or put together in the field.
FENESTRATION AREA	is the area of fenestration products (i.e., windows, skylights and glass doors) in exterior openings, including the sash or frame area. The nominal area (from nominal dimensions such as $4^0 4^0$) or rough opening is also acceptable. Where the term "glazing area" is used in the standards it is the entire fenestration area, not just the area of glazing, unless stated otherwise. See *Fenestration Product*, *Glazing Area* and *Shading*.

Term	Definition
FENESTRATION PRODUCT	is any transparent or translucent material plus any sash, frame, mullions and dividers, in the envelope of a building, including, but not limited to, windows, sliding glass doors, French doors, skylights, curtain walls, garden windows, and other doors with a glazed area of more than one half of the door area.
FENESTRATION PRODUCT, FIELD-FABRICATED	is a fenestration product including a glazed exterior door whose frame is made at the construction site of standard dimensional lumber or other materials that were not previously cut, or otherwise formed with the specific intention of being used to fabricate a fenestration product or exterior door. Field fabricated does not include site-built fenestration with a label certificate or products required to have temporary or permanent labels.
FENESTRATION PRODUCT, SITE-BUILT	is fenestration designed to be field-glazed or field assembled units using specific factory cut or otherwise factory formed framing and glazing units that are manufactured with the intention of being assembled at the construction site and are provided with an NFRC label certificate for site-built fenestration. Examples of site-built fenestration include storefront systems, curtain walls, and atrium roof systems.
FENESTRATION SYSTEM	is a collection of fenestration products included in the design of a building.
FENESTRATION, BAY WINDOW	is a combination assembly which is composed of three or more individual windows either joined side by side or installed within opaque assemblies and which projects away from the wall on which it is installed. Center windows, if used are parallel to the wall on which the bay is installed. The two side windows are angled with respect to the center window(s). Common angles are 30° and 45°, although other angles are sometimes employed.
FENESTRATION, CURTAIN WALL	is an external nonbearing wall intended to separate the exterior and interior environments, which may consist entirely (or principally) of a combination of framing materials, glass and glazing, opaque in-fill and other surfacing materials supported by or within a framework.
FENESTRATION, GARDEN WINDOW:	a window unit that consists of a three-dimensional, five-sided structure, with or without an operating sash, also known as greenhouse window.
FENESTRATION, SPANDREL	is opaque glazing material most often used to conceal building elements between floors of a building so that they cannot be seen from the exterior, also known as “opaque in-fill systems”.
FIELD ERECTED COOLING TOWERS	are cooling towers which are custom designed for a specific application and which can not be delivered to a project site in the form of factory assembled modules due to their size, configuration, or materials of construction.

Term	Definition
FIELD-FABRICATED FENESTRATION PRODUCT OR EXTERIOR DOOR	is a fenestration product or exterior door whose frame is made at the construction site of standard dimensional lumber or other materials that were not previously cut, or otherwise formed with the specific intention of being used to fabricate a fenestration product or exterior door. Field fabricated does not include site-built fenestration with a label certificate or products required to have temporary or permanent labels.
FINANCIAL TRANSACTION	See ~~*Occupancy*~~*Nonresidential Functional Area or Type of Use.*
FIREPLACE	is a hearth and fire chamber or similar prepared place in which a ~~solid-fuel~~ fire may be ~~burned, as defined in the CBC; these include,~~made and which is built in conjunction with a flue or chimney, including but ~~are~~ not limited to~~,~~ factory-built fireplaces, masonry fireplaces, and masonry heaters as further clarified in the CBC.
FLOOR AREA	is the floor area (in square feet) of enclosed conditioned or unconditioned space on all floors of a building, as measured at the floor level of the exterior surfaces of exterior walls enclosing the conditioned or unconditioned space. ~~See *Conditioned Floor Area*.~~
FLOOR/SOFFIT TYPE	is a type of floor/soffit assembly having a specific heat capacity, framing type, and U-~~value.~~factor.
FLUX	is the rate of ~~the~~ energy flow per unit area.
FOOD PREPARATION EQUIPMENT	is cooking equipment intended for commercial use, including coffee machines, espresso coffee makers, conductive cookers, food warmers including heated food servers, fryers, griddles, nut warmers, ovens, popcorn makers, steam kettles, ranges, and cooking appliances for use in commercial kitchens, restaurants, or other business establishments where food is dispensed.
FOSSIL FUELS	are fuels which are derived from natural gas, coal, oil and liquefied petroleum products. These are generally nonrenewable resources, although natural gas may also be produced by other means, such as biomass conversion.
FRAMED PARTITION OR ASSEMBLY	is a partition or assembly constructed using separate structural members spaced not more than 32 inches on center.
FRAMING EFFECTS	is the effect on the overall U-factor due to the type and amount of framing in walls, roofs/ceilings and floors . For compliance, fixed values for wood framing percentages are assumed when calculating U-factors.
FRAMING PERCENTAGE	is the fraction of the surface of a partition that is framing as compared to that portion which is cavity.
FRONT	is the primary entry side of the building (front facade) used as a reference in defining the orientation of the building or unit plan. The orientation of the front facade may not always be the same as that for the front door itself.

Term	Definition
GAP WIDTH	is the distance between glazings in multi-glazed systems. This is typically measured from inside surface to inside surface, though some manufacturers may report "overall" IG width, which is measured from outside surface to outside surface.
GAS COOLING EQUIPMENT	is cooling equipment that produces chilled water or cold air using natural gas or liquefied petroleum gas as the primary energy source.
GAS HEATING SYSTEM	is a natural gas or ~~liquified~~liquefied petroleum gas heating system.
GAS INFILLS	are air, argon, krypton, CO_2, SF_6, or a mixture of these gasses between the panes of glass in insulated glass units.
GAS LOG	is a self-contained, free-standing, open-flame, gas-burning appliance consisting of a metal frame or base supporting simulated logs, and designed for installation only in a vented fireplace. ~~See also *Decorative Gas Appliance*~~
GENERAL COMMERCIAL AND INDUSTRIAL WORK	See ~~*Occupancy*~~*Nonresidential Functional Area or Type of Use*.
GENERAL LIGHTING	is lighting designed to provide a substantially uniform level of illumination throughout an area, exclusive of any provision for special visual tasks or decorative effect. When designed for lower-than-task illuminance used in conjunction with other specific task lighting systems, it is also called "ambient" lighting. ~~See also *Lighting*.~~
GEOTHERMAL HEAT PUMP	See *Ground Source Heat Pump*.
GLAZING	See *Fenestration Product*.
GLAZING AREA	See *Fenestration Area*.
GOVERNMENTAL AGENCY	is any public agency or subdivision thereof, including, but not limited to, any agency of the state, a county, a city, a district, an association of governments, or a joint power agency.
GREENHOUSE WINDOW	is a type of fenestration product which adds conditioned volume but no conditioned floor area to a building.
GRILLES	See *Dividers.*
GROCERY SALES	See ~~*Occupancy*~~*Nonresidential Functional Area or Type of Use*.
GROSS EXTERIOR ROOF AREA	is the sum of the skylight area and the exterior roof/ceiling area.
GROSS EXTERIOR WALL AREA	is the sum of the window area, door area, and exterior wall area.

Term	Definition
GROUND FLOOR AREA	is defined as the slab-on-grade area of a slab-on-grade building and the conditioned footprint area of a raised floor building (for compliance with the low-rise residential standards).
GROUND SOURCE HEAT PUMP	is a heat pump that uses the earth as a source of energy for heating and a sink for energy when cooling. Some systems pump water from an aquifer in the ground and return the water to the ground after transferring heat from or to the water. A few systems use refrigerant directly in a loop of piping buried in the ground. Those heat pumps that use either a water loop or pump water from an aquifer have efficiency test methods that are accepted by the Energy Commission. These efficiency values are certified to the Energy Commission by the manufacturer and are expressed in terms of heating Coefficient of Performance (COP) and cooling Energy Efficiency Ratio (EER).
GU-24	is the designation of a lamp holder and socket configuration, based on a coding system by the International Energy Consortium, where "G" indicates the broad type of two or more projecting contacts, such as pins or posts, "U" distinguishes between lamp and holder designs of similar type but that are not interchangeable due to electrical or mechanical requirements, and "24" indicates 24 millimeters center to center spacing of the electrical contact posts.
HABITABLE STORY	is a story that contains space in which humans may work or live in reasonable comfort, and that has at least 50 percent of its volume above grade.
HARD COAT	is a low emissivity metallic coating applied to the glass, which will be installed in a fenestration product, through a pyrolytic process (at or near the melting point of the glass so that it bonds with the surface layer of glass). Hard coatings are less susceptible to oxidation and scratching as compared to soft coats. Hard coatings generally do not have as low emissivity as soft coats.
HARDSCAPE	See *Outdoor Lighting.*
HEAT CAPACITY (HC)	is the amount of heat necessary to raise the temperature of all the components of a unit area in an assembly by 1°F. It is calculated as the sum of the average thickness times the density times the specific heat for each component, and is expressed in Btu per square foot per °F.
HEAT PUMP	is a device that is capable of heating by refrigeration, and that may include a capability for cooling.
HEATED SLAB FLOOR	is a concrete slab floor or a lightweight concrete topping slab laid over a raised floor, with embedded space heating hot water pipes. The heating system using the heated slab floor is sometimes referred to as radiant slab floors or radiant heating.
HEATING EQUIPMENT	is equipment used to provide mechanical heating for a room or rooms in a building.

Term	Definition
HEATING SEASONAL PERFORMANCE FACTOR (HSPF)	is the total heating output of a central air-conditioning heat pump (in Btu) during its normal ~~usage~~use period for heating~~,~~ divided by the total electrical energy input (in watt-hours) during the same period, as determined using the applicable test method in the Appliance Efficiency Regulations.
HERS PROVIDER	See *Home Energy Rating System Provider*.
HERS PROVIDER DATA REGISTRY	means the database maintained by the HERS provider that contains the records of the HERS rater's field verification and diagnostic testing results, including dwelling unit identification information, test/certification identification information, and builder identification information.
HERS RATER	See *Home Energy Rating System Rater*.
HI	is the Hydronics Institute of the Gas Appliance Manufacturers Association (GAMA).
HI HTG BOILER STANDARD	is the Hydronics Institute document entitled "Testing and Rating Standard for Rating Boilers," 1989.
HIGH BAY	See ~~*Occupancy*~~*Nonresidential Functional Area or Type of Use, General commercial and industrial work.*
HIGH-RISE RESIDENTIAL BUILDING	is a building, other than a hotel/motel, of Occupancy Group R, Division 1 with four or more habitable stories.
HOME ENERGY RATING SYSTEM PROVIDER	is an organization that the Commission has approved to administer a home energy rating system program, certify raters and maintain quality control over field verification and diagnostic testing required for compliance with the Energy Efficiency Standards.
HOME ENERGY RATING SYSTEM RATER	is a person certified by a Commission approved HERS Provider to perform the field verification and diagnostic testing required for demonstrating compliance with the Energy Efficiency Standards.
HORIZONTAL GLAZING	See *Skylight*.
HOTEL AND MOTEL GUEST ROOM	is a guest room of a Hotel/Motel.
HOTEL FUNCTION AREA	See ~~*Occupancy*~~*Nonresidential Functional Area or Type of Use*.
HOTEL LOBBY	See ~~*Occupancy*~~*Nonresidential Functional Area or Type of Use*, Lobby, Hotel.

Term	Definition
HOTEL/MOTEL	is a building or buildings incorporating six or more guest rooms or a lobby serving six or more guest rooms, where the guest rooms are intended or designed to be used, or which are used, rented, or hired out to be occupied, or which are occupied for sleeping purposes by guests, and all conditioned spaces within the same building envelope. Hotel/motel also includes all conditioned spaces which are (1) on the same property as the hotel/motel, (2) served by the same central heating, ventilation, and air-conditioning system as the hotel/motel, and (3) integrally related to the functioning of the hotel/motel as such, including, but not limited to, exhibition facilities, meeting and conference facilities, food service facilities, lobbies, and laundries.
HSPF	See *Heating Seasonal Performance Factor*.
HVAC SYSTEM	~~See *Heating, Ventilating and Air Conditioning*.~~ See *Space-conditioning System*.
HYDRONIC COOLING SYSTEM	is any cooling system which uses water or a water solution as a source of cooling or heat rejection, including chilled water systems (both air and water-cooled) as well as water-cooled or evaporatively cooled direct expansion systems, such as water source (water-to-air) heat pumps.
HYDRONIC SPACE HEATING SYSTEM	is a system that uses water-heating equipment, such as a storage tank water heater or a boiler, to provide space heating. Hydronic space heating systems include both radiant floor systems and convective or fan coil systems. See *Combined Hydronic Space/Water Heating System*.
IESNA HB	~~(~~See ~~"~~*IESNA Lighting Handbook*~~)~~.
IESNA LIGHTING HANDBOOK	is the Illuminating Engineering Society National Association document entitled "The IESNA Lighting Handbook: Reference and Applications, Ninth Edition~~.~~" (2000).
IG UNIT	See *Insulating Glass Unit*.
ILLUMINATED FACE	See *Sign*.
INDEPENDENT IDENTITY	is having no financial interest in, and not advocating or recommending the use of any product or service as a means of gaining increased business with, firms or persons specified in Section 1673(i) of the California Home Energy Rating System Program regulations (California Code of Regulations, Title 20, Division 2, Chapter 4, Article 8). (Financial Interest is an ownership interest, debt agreement, or employer/employee relationship. Financial interest does not include ownership of less than 5% of the outstanding equity securities of a publicly traded corporation.) NOTE: The definitions of "independent entity" and "financial interest," together with Title 20, Section 1673(i), prohibit conflicts of interest between HERS Providers and HERS Raters, or between Providers/Raters and builders/subcontractors.

Term	**Definition**
INDIRECTLY CONDITIONED SPACE	is enclosed space, including, but not limited to, unconditioned volume in atria, that (1) is not directly conditioned space; and (2) either (a) has a thermal transmittance area product (UA) to directly conditioned space exceeding that to the outdoors or to unconditioned space and does not have fixed vents or openings to the outdoors or to unconditioned space, or (b) is a space through which air from directly conditioned spaces is transferred at a rate exceeding three air changes per hour.
INDUSTRIAL AND COMMERCIAL STORAGE BUILDING	*See ~~Occupancy~~Nonresidential Functional Area or Type of Use.*
INDUSTRIAL EQUIPMENT	is manufactured equipment used in industrial processes.
INFILTRATION	is uncontrolled inward air leakage from outside a building or unconditioned space, including leakage through cracks and interstices, around windows and doors, and through any other exterior or demising partition or pipe or duct penetration.
INFILTRATION CONTROLS	are measures taken to control the infiltration of air. Mandatory Infiltration control measures include weather-stripping, caulking, and sealing in and around all exterior joints and openings.
INSTALLATION CERTIFICATE (CF-6R)	is a document with information required by the Commission that is prepared by the builder or installer verifying that the measure was installed to meet the requirements of the standards.
INSTALLER	means the builder's subcontractor or the person installing the equipment.
INSULATING GLASS UNIT	is a self-contained unit, including the glazings, spacer(s), films (if any), gas infills, and edge caulking, that is installed in fenestration products. It does not include the frame.
INSULATION	Insulation is a material that limits heat transfer. Insulating material of the types and forms listed in Section 118(a) of the Standards, may be installed only if the manufacturer has certified that the insulation complies with the Standards for Insulating Material, Title 24, Part 12, Chapter 12-13 of the California Code of Regulations. Insulation must be placed within or contiguous with a wall, ceiling or floor, or over the surface of any appliance or its intake or outtake mechanism for the purpose of reducing heat transfer or reducing adverse temperature fluctuations of the building, room or appliance. Insulation may be installed in wall, ceiling/roof and raised floor assemblies and at the edge of a slab-on-grade. Movable insulation is designed to cover windows and other glazed openings part of the time to reduce heat loss and heat gain.

Term	Definition
INTEGRATED PART LOAD VALUE (IPLV)	is a single-number figure of merit based on part load EER or COP expressing part load efficiency for air-conditioning and heat pump equipment on the basis of weighted operation at various load capacities for the equipment as determined using the applicable test method in the Appliance Efficiency Regulations or Section 112.
INTERIOR PARTITION	is an interior wall or floor/ceiling that separates one area of conditioned space from another within the building envelope.
INTERNALLY ILLUMINATED SIGN	See *Sign*.
IPLV	See *Integrated Part Load Value*.
ISO 13256-1	is the International Organization for Standardization document entitled "Water-source heat pumps – Testing and rating for performance – Part 1: Water-to-air and brine-to-air heat pumps," 1998.
ISOLATION DEVICE	is a device that prevents the conditioning of a zone or group of zones in a building while other zones of the building are being conditioned.
KITCHEN	~~in a low-rise residential building is a room or area used for cooking, food storage and preparation and washing dishes, including associated counter tops and cabinets, refrigerator, stove, ovens, and floor area. Adjacent areas are considered kitchen if the lighting for the adjacent areas is on the same circuit as the lighting for the kitchen.~~See *Residential Space Type*.
KITCHEN/FOOD PREPARATION	*See ~~Occupancy~~Nonresidential Functional Area or Type~~.~~ of Use*
KNEE WALL	is a sidewall separating conditioned space from attic space under a pitched roof. Knee walls should be insulated as an exterior wall as specified by the chosen method of compliance.
LANDSCAPE LIGHTING	See *Outdoor Lighting*.
LANTERN	See *Outdoor Lighting*.
LAUNDRY	See *~~Occupancy~~Nonresidential Functional Area or Type of Use.*
LEFT SIDE	is the left side of the building as one faces the front facade from the outside. This designation is used on the Certificate of Compliance and other compliance documentation .
LIBRARY	See *~~Occupancy~~Nonresidential Functional Area or Type of Use.*
LIGHT EMITTING DIODE (LED),	also known as Solid State Lighting (SSL), is a *pn* junction semiconductor device that emits incoherent optical radiation when biased in the forward direction. The acronym "LED" typically refers to an LED package, LED lamp, or LED component. **LED Array** is an assembly of LED packages on a printed

Term	Definition
	circuit board or substrate, possibly with optical elements and additional thermal, mechanical, and electrical interfaces. The device does not contain a power source and is not connected directly to the branch circuit. **LED Component** is a semiconductor die that contains wire bond connections, an optical element, or a thermal, mechanical, or electrical interface. **LED Driver** is a power source with integral LED control circuitry designed to meet the specific requirements of a LED lamp or a LED array. **LED lamp, Integrated** is an LED with an integrated LED driver and a standardized base that is designed to connect to the branch circuit via a standardized lampholder/socket. NOTE: In North America, "a standardized base" refers to an ANSI standard base. In the U.S. "branch circuit" is used to describe the "mains voltage" in IEC documents. **LED lamp, Non-Integrated** is an LED device with no integral power source and with a standardized base designed for connection to a LED luminaire. **LED Lighting System** is the component part of an LED luminaire that includes one or more LED's or an LED array; an LED driver; electrical and mechanical interfaces; and an integral heat sink to provide thermal dissipation. An led lighting system may be designed to accept additional components that provide aesthetic, optical, and environmental control (other than thermal dissipation). **LED Luminaire** is a complete LED lighting unit consisting of a light source and driver together with parts to distribute light, to position and protect the light source, and to connect the light source to a branch circuit. The light source itself may be an LED array, an LED module, an LED lighting system, or an LED lamp. The LED luminaire is intended to connect directly to a branch circuit. **LED Module** is a component part of an LED light source that includes one or more LEDs that are connected to the load side of LED power source or LED driver. Electrical, electronic, optical, and mechanical components may also be part of an LED module. The LED module does not contain a power source. **LED Package** is an assembly of one or more semiconductor die that contains wire bond connections, possibly with an optical element and thermal, mechanical, and electrical interfaces. The LED Package does not include a power source and is not connected directly to the branch circuit.
LIGHTING FLOOR AREA	is the floor area (in square feet) of enclosed space on all floors of a building, as measured at the floor level of the interior surfaces of all walls.

Term	Definition
LIGHTING ZONE	See *Outdoor Lighting.*
LIQUID LINE	is the refrigerant line that leads from the condenser to the evaporator in a split system air conditioner or heat pump. The refrigerant in this line is in a liquid state and is at an elevated temperature. This line should not be insulated.
LISTED	is equipment, materials, or services included in a list published by an organization that is recognized to have the authority to evaluate and test the equipment, material or services. The organization performs periodic inspection and evaluation to ensure that the listed equipments, material, or services meet identified standards or has been tested and found suitable for a specified purpose. The recognized organizations include but are not limited to the Underwriters Laboratories (UL).
LOCKER/DRESSING ROOM	See *Nonresidential Functional Area or Type of Use*.
LOUNGE/RECREATION	See *Nonresidential Functional Area or Type of Use*.
LOW BAY	See *Nonresidential Functional Area or Type of Use, General commercial and industrial work*
LOW-E COATING	is a low emissivity metallic coating applied to glazing in fenestration products. See *Soft Coat* and *Hard Coat*.
LOW-RISE ENCLOSED SPACE	is an enclosed space located in a building with 3 or fewer stories.
LOW-RISE RESIDENTIAL BUILDING	is a building, other than a hotel/motel that is of Occupancy Group R, Division 1, and is multi-family with three stories or less, or ~~that is~~ a single family residence of Occupancy Group R, Division 3~~.~~, or an Occupancy Group U building located on a residential site.
LOW-SLOPED ROOF	is a roof that has a ratio of rise to run of 2:12 or less.
LPG	~~is Liquefied Petroleum Gas.~~is liquefied petroleum gas. Propane is one type of LPG.
LUMENS/WATT	is the amount of light available from a given light source (lumens) divided by the power requirement for that light source (watts). The more usable light that a light source provides per watt, the greater its efficacy. See *Efficacy*.
LUMINAIRE	is a complete lighting unit consisting of a lamp(s) and the parts designed to distribute the light, to position and protect the lamp(s), and to connect the lamp(s) to the power supply; commonly referred to as "lighting fixtures~~" or "instruments."~~."
MAIN ENTRY LOBBY	See ~~*Occupancy*~~*Nonresidential Functional Area or Type of Use*, Lobby, Main entry.
MALL	See ~~*Occupancy*~~*Nonresidential Functional Area or Type of Use*.

Term	Definition
MALL BUILDING	is a single building enclosing a number of tenants and occupants wherein two or more tenants have a main entrance into one or more malls.
MANDATORY MEASURES CHECKLIST (MF-1R)	is a form used by the building plan checker and field inspector to verify compliance of the building with the prescribed list of mandatory features, equipment efficiencies and product certification requirements. The documentation author indicates compliance by initialing, checking, or marking N/A (for features not applicable) in the boxes or spaces provided for the designer.
MANUAL	is capable of being operated by personal intervention.
MANUFACTURED DEVICE	is any heating, cooling, ventilation, lighting, water heating, refrigeration, cooking, plumbing fitting, insulation, door, fenestration product, or any other appliance, device, equipment, or system subject to Sections 110 through 119 of Title 24, Part 6.
MANUFACTURED FENESTRATION PRODUCT	is a fenestration product constructed of materials which are factory cut or otherwise factory formed with the specific intention of being used to fabricate a fenestration product. A manufactured fenestration product is typically assembled before delivery to a job site. However a "knocked-down" or partially assembled product sold as a fenestration product is also a manufactured fenestration product when provided with temporary and permanent labels as described in Section 10-111; otherwise it is a site-built fenestration product when provided with temporary and permanent labels as described in Section 10-111; otherwise it is a site-built fenestration product.
MARQUEE LIGHTING	See *Outdoor Lighting.*
MECHANICAL COOLING	is lowering the temperature within a space using refrigerant compressors or absorbers, desiccant dehumidifiers, or other systems that require energy from depletable sources to directly condition the space. In nonresidential, high-rise residential, and hotel/motel buildings, cooling of a space by direct or indirect evaporation of water alone is not considered mechanical cooling.
MECHANICAL HEATING	is raising the temperature within a space using electric resistance heaters, fossil fuel burners, heat pumps, or other systems that require energy from depletable sources to directly condition the space.
MEDICAL AND CLINICAL CARE:	See ~~*Occupancy*~~*Nonresidential Functional Area or Type of Use*.
METAL BUILDING	is a complete integrated set of mutually dependent components and assemblies that form a building, which consists of a steel-framed superstructure and metal skin. This does not include structural glass or metal panels such as in a curtainwall system.

Term	Definition
MIXED OCCUPANCY BUILDING	is a building designed and constructed for more than one type of occupancy, such as a three story building with ground floor retail and second and third floor residential apartments.
MODEL	is a single floor plan ~~and house or~~ of a dwelling unit design ~~that is repeated throughout a subdivision or within a multi-family building project~~. To be considered the same model, dwelling units shall be in the same subdivision or multi-family housing development and have the same energy designs and features, including the same floor area and volume~~, for each dwelling unit, as shown on the CF-1R~~. For multi-family buildings, variations in the exterior surface areas caused by the location of dwelling units within the building do not cause dwelling units to be considered ~~a~~ different models. For purposes of establishing HERS sampling groups, variations in the basic floor plan layout, energy design, compliance features, zone floor area, or zone volume, that do not change the HERS features to be tested, the heating or cooling capacity of the HVAC unit(s), or the number of HVAC units specified for each dwelling unit, shall not cause dwelling units to be considered different models.
MODELING ASSUMPTIONS	are the conditions (such as weather conditions, thermostat settings and schedules, internal gain schedules, etc.) that are used for calculating a building's annual energy consumption as specified in the ~~ACM~~Alternative Calculation Methods Manuals.
MOTION SENSOR, LIGHTING,	is a device that automatically turns lights off soon after an area is vacated. The term ~~Motion Sensor~~motion sensor applies to a device that controls outdoor lighting systems. When the device is used to control indoor lighting systems, it is termed an occupant sensor. The device also may be called an occupancy sensor, ~~or~~ occupant~~-~~-sensing device, or vacancy sensor.
MOVABLE SHADING DEVICE	See *Operable Shading Device*.
MULLION	is a vertical framing member separating adjoining window or door sections. See *Dividers*.
MULTI-FAMILY DWELLING UNIT	is a dwelling unit of occupancy type R, as defined by the *CBC*, sharing a common wall and/or ceiling/floor with at least one other dwelling unit.
MULTI-LEVEL LIGHTING CONTROL	is a lighting control that reduces lighting power in multiple steps while maintaining a reasonably uniform level of illuminance throughout the area controlled.

Term	Definition
MULTIPLE ZONE	is a supply fan (and optionally a return fan) with heating and/or cooling heat exchangers (e.g. DX coil, chilled water coil, hot water coil, furnace, electric heater) that serves more than one thermostatic zone. Zones are thermostatically controlled by features including but not limited to variable volume, reheat, recool and concurrent operation of another system.
MULTISCENE ~~DIMMING~~PROGRAMMABLE SYSTEM	is a lighting control device that has the capability of setting light levels throughout a continuous range, and that has pre-established settings within the range.
MUNTINS	See *Dividers.*
MUSEUM	See ~~*Occupancy*~~*Nonresidential Functional Area or Type of Use.*
NEWLY CONDITIONED SPACE	is any space being converted from unconditioned to directly conditioned~~,~~ or indirectly conditioned space. Newly conditioned space must comply with the requirements for an addition. See Section 149 for nonresidential occupancies and Section 152 for residential occupancies.
NEWLY CONSTRUCTED BUILDING	is a building that has never been used or occupied for any purpose.
NFRC	is the National Fenestration Rating Council. This is a national organization of fenestration product manufacturers, glazing manufacturers, manufacturers of related materials, utilities, state energy offices, laboratories, home builders, specifiers (architects), and public interest groups. This organization is designated by the Commission as the Supervisory Entity, which is responsible for rating the U-factors and solar heat gain coefficients of manufactured fenestration products (i.e., windows, skylights, glazed doors) that must be used in compliance calculations. See also *Fenestration Area* and *Fenestration Product*.
NFRC 100	~~is the National Fenestration Rating Council document entitled "NFRC 100: Procedure for Determining Fenestration Product U-factors" (~~is the National Fenestration Rating Council document entitled "NFRC 100: Procedure for Determining Fenestration Product U-factors." (1997 or November 2002~~).~~; NFRC 100 includes procedures for site fenestration formerly included in a separate document, NFRC 100-SB)

Term	Definition
NFRC 200	~~is the National Fenestration Rating Council document entitled "NFRC 200: Procedure for Determining Fenestration Product Solar Heat Gain Coefficients~~ is the National Fenestration Rating Council document entitled "NFRC 200: Procedure for Determining Fenestration Product Solar Heat Gain Coefficients and Visible Transmittance at Normal Incidence"~~(~~." (1995 or November 2002)~~.~~
NFRC 400	~~is the National Fenestration Rating Council document entitled "NFRC 400: Procedure for Determining Fenestration Product Air Leakage" (~~is the National Fenestration Rating Council document entitled "NFRC 400: Procedure for Determining Fenestration Product Air Leakage." (1995 or January 2002)~~.~~
NONDEPLETABLE SOURCES	is defined as energy that is not obtained from depletable sources. Also referred to as renewable energy, including solar and wind power. See *Energy Obtained from Nondepletable Sources*.
NONRESIDENTIAL BUILDING	is any building which is a Group A, B, E, F, H, M, or S; and is a U Occupancy when the Group U Occupancy is on a nonresidential site. **NOTE:** Requirements for high-rise residential buildings and hotels/motels are included in the nonresidential sections of Title 24, Part 6.
~~NONRESIDENTIAL MANUAL~~ *NONRESIDENTIAL COMPLIANCE MANUAL*	is the manual developed by the ~~Commission~~commission, under Section 25402.1 (e) of the Public Resources Code, to aid designers, builders, and contractors in meeting the energy efficiency requirements for nonresidential, high-rise residential, and hotel/motel buildings.
NONRESIDENTIAL FUNCTION AREA OR TYPE OF USE	is one of the following: **Atrium** is a large-volume space created by openings connecting two or more stories and is used for purposes other than an enclosed stairway, an elevator hoistway, an escalator opening, or as a utility shaft for plumbing, electrical, air-conditioning or other equipment and is not a mall. **Auditorium** is the part of a public building where an audience sits in fixed seating, or a room, area, or building with fixed seats used for public meetings or gatherings not specifically for the viewing of dramatic performances. **Auto repair** is the portion of a building used to repair automotive equipment and/or vehicles, exchange parts, and may include work using an open flame or welding equipment. **Beauty Salon** is a room or area in which the primary activity is manicures, pedicures, facials, or the cutting or styling of

Term	Definition
	hair. Also known as beauty shop or beauty parlor.
	Civic meeting place is a city council or board of supervisors meeting chamber, courtroom, or other official meeting space accessible to the public.
	Classroom Building is a building or group of buildings that is predominately classrooms used by an organization that provides instruction to students, which may include corridors and stairways, restrooms and small storage closets, faculty offices, and workshops and labs. A classroom building does not include buildings that are not predominantly classroom, including auditorium, gymnasium, kitchen, library, multi-purpose, dining and cafeteria, student union, maintenance staff workroom, or storage buildings.
	Classroom, lecture, training, vocational room is a room or area where an audience or class receives instruction.
	Commercial and industrial storage is a room, area, or building used for storing items.
	Convention, conference, multipurpose and meeting centers is an assembly room, area, or building that is used for meetings, conventions and multiple purposes, including, but not limited to, dramatic performances, and that has neither fixed seating nor fixed staging.
	Corridor is a passageway or route into which compartments or rooms open.
	Dining is a room or rooms in a restaurant or hotel/motel (other than guest rooms) where meals that are served to the customers will be consumed.
	Dormitory is a building consisting of multiple sleeping quarters and having interior common areas such as dining rooms, reading rooms, exercise rooms, toilet rooms, study rooms, hallways, lobbies, corridors, and stairwells, other than high-rise residential, low-rise residential, and hotel/motel occupancies.
	Electrical/mechanical/telephone room is a room in which the building's electrical switchbox or control panels, telephone switchbox, and/or HVAC controls or equipment is located.
	Exercise center/gymnasium is a room or building equipped for gymnastics, exercise equipment, or indoor athletic activities.
	Exhibit is a room or area that is used for exhibitions that has neither fixed seating nor fixed staging.
	Financial institution is a public establishment used for conducting financial transactions including the custody, loan, exchange, or issue of money, for the extension of credit, and for facilitating the transmission of funds.
	Financial transactions is the teller area and work stations for customers to complete financial transactions.

Term	Definition
	General commercial and industrial work is a room, area, or building in which an art, craft, assembly or manufacturing operation is performed.
	High bay: Luminaires 25 feet or more above the floor.
	Low bay: Luminaires less than 25 feet above the floor.
	Precision: Involving visual tasks of small size or fine detail such as electronic assembly, fine woodworking, metal lathe operation, fine hand painting and finishing, egg processing operations, or tasks of similar visual difficulty.
	Grocery sales is a room, area, or building that has as its primary purpose the sale of foodstuffs requiring additional preparation prior to consumption.
	Grocery store is a building that has as its primary purpose the sale of foodstuffs requiring additional preparation prior to consumption.
	Hotel function area is a hotel room or area such as a hotel ballroom, meeting room, exhibit hall or conference room, together with pre-function areas and other spaces ancillary to its function.
	Housing, Public and Commons Areas is housing other than Occupancy Group I that are living quarters. Commons areas may include dining, reading, study, library or other community spaces and/or medical treatment or hospice facilities.
	Multi-family: A multi-family building contains multiple dwelling units that share common walls and may also share common floors or ceilings (apartments).
	Dormitory: A space in a building where group sleeping accommodations are provided in one room, or in a series of closely associated rooms, for persons not members of the same family group, under joint occupancy and single management, as in college dormitories or fraternity houses.
	Senior housing: Is specifically for habitation by seniors, including but not limited to independent living quarters, and assisted living quarters.
	Industrial and commercial storage buildings is a building in which ….storage.
	Kitchen/food preparation is a room or area with cooking facilities and/or an area where food is prepared.
	Laundry is a place where laundering activities occur.
	Library is a repository for literary materials, such as books, periodicals, newspapers, pamphlets and prints, kept for reading or reference.
	Reading areas: Is a library facility term describing areas within a prescribed building space containing tables, chairs, or desks for library patrons to use for the purpose of reading books and other reference documents. Reading areas do not

Term	Definition
	include private offices, meeting, photocopy, or other rooms not used specifically for reading by library patrons. **Stacks**: Is a library facility term describing a large grouping of shelving sections within a prescribed building space. Stack aisles include pedestrian paths located in stack areas. Book stack aisle lighting is typically a central aisle luminaire distributing light to stack faces on both sides of an aisle. **Laboratory, Scientific** is a space or facility where research, experiments, and measurement in medical and physical sciences are performed requiring examination of fine details. The space may include workbenches, countertops, scientific instruments, and associated floor spaces. Scientific laboratory does not refer to film, computer, and other laboratories where scientific experiments are not performed. **Lobby,** **Hotel:** Is the contiguous space in a hotel/motel between the main entrance and the front desk, including reception, waiting and seating areas. **Main entry:** Is the contiguous space in buildings other than hotel/motel that is directly located by the main entrance of the building through which persons must pass, including reception, waiting and seating areas. **Locker/dressing room** is a room or area for changing clothing, sometimes equipped with lockers. **Lounge/recreation** is a room used for leisure activities which may be associated with a restaurant or bar. **Mall** is a roofed or covered common pedestrian area within a mall building that serves as access for two or more tenants. **Medical and clinical care** is a room, area, or building that does not provide overnight patient care and that is used to promote the condition of being sound in body or mind through medical, dental, or psychological examination and treatment, including, but not limited to, laboratories and treatment facilities. **Medical buildings and clinics** is a building that does not provide overnight patient care and that is used to promote the condition of being sound in body or mind through medical, dental, or psychological examination and treatment, including, but not limited to, laboratories and treatment facilities. **Museum** is a space in which the primary function is the care or exhibit of works of artistic, historical, or scientific value. A museum does not include a gallery or other place where art is for sale. A museum does not include a lobby, conference room, or other occupancies where the primary function is not the care or exhibit of works of artistic, historical, or scientific value. **Office** is a room, area, or building of CBC Group B Occupancy other than restaurants.

Term	Definition
	Parking garage is a covered building or structure for the purpose of parking vehicles, which consists of at least a roof over the parking area enclosed with walls on all sides. Parking garages may have fences, rails, partial walls, or other barriers in place of one or more walls. The structure has an entrance(s) and exit(s), and includes areas for vehicle maneuvering to reach the parking spaces. If the roof of a parking structure is also used for parking, the section without an overhead roof is considered a parking lot instead of a parking garage.
	Parking Area: Are areas of a parking garage for the purpose of parking and maneuvering of vehicles on a single floor, and which is not the roof of a parking structure
	Ramps and Entries: Parking ramps are driveways for the purpose of moving vehicles between floors of a parking garage. Parking entries are driveways for the purpose of vehicles entering into a parking garage.
	Religious facility is a building in which the primary function is for an assembly of people to worship, Religious facilities do not include classroom, housing, or gymnasium buildings.
	Religious worship is a room, area, or building in which the primary function is for an assembly of people to worship. Religious worship does not include classrooms, offices, or other areas in which the primary function is not for an assembly of people to worship.
	Restaurant is a room, area, or building that is a food establishment as defined in Section 27520 of the Health and Safety Code.
	Restroom is a room or suite of rooms providing personal facilities such as toilets and washbasins.
	Retail merchandise sales is a room, area, or building in which the primary activity is the sale of merchandise.
	School is a building or group of buildings that is used by an organization that provides instruction to students, which is predominately classroom buildings but may also include auditorium, gymnasium, kitchen, library, multi-purpose rooms, dining and cafeteria, student union, maintenance staff workroom, and small storage spaces.
	Stairs is a series of steps providing passage from one level of a building to another, including escalators.
	Support area is a room or area used as a passageway, utility room, storage space, or other type of space associated with or secondary to the function of an occupancy that is listed in these regulations.
	Tenant lease space is a portion of a building intended for lease for which a specific tenant is not identified at the time of permit application.

Term	Definition
	Theater **Motion picture:** Is an assembly room, a hall, or a building with tiers of rising seats or steps for the showing of motion pictures. **Performance:** Is an assembly room, a hall, or a building with tiers of rising seats or steps for the viewing of dramatic performances, lectures, musical events and similar live performances. **Transportation function** is the ticketing area, waiting area, baggage handling areas, concourse, or other areas not covered by primary functions in Table 146-C in an airport terminal, bus or rail terminal or station, subway or transit station, or a marine terminal. **Vocational room** is a room used to provide training in a special skill to be pursued as a trade. **Waiting area** is an area other than a hotel lobby or main entry lobby normally provided with seating and used for people waiting. **Wholesale showroom** is a room where samples of merchandise are displayed.
NONSTANDARD PART LOAD VALUE (NPLV)	is a single-number part-load efficiency figure of merit for chillers referenced to conditions other than IPLV conditions. (See "Integrated Part Load Value")
NORTH-FACING	See *Orientation*.
NSHP GUIDEBOOK	is the California Energy Commission document entitled "New Solar Home Partnership Guidebook" that is in effect at the time of application for the building permit.
~~OCCUPANCY TYPE~~	~~is one of the following:~~ ~~**Auditorium** is the part of a public building where an audience sits in fixed seating, or a room, area, or building with fixed seats used for public meetings or gatherings not specifically for the viewing of dramatic performances.~~ ~~**Auto repair** is the portion of a building used to repair automotive equipment and/or vehicles, exchange parts, and may include work using an open flame or welding equipment.~~ ~~**Civic** meeting space is a city council or board of supervisors meeting chamber, courtroom, or other official meeting space accessible to the public .~~ ~~**Classroom, lecture, or training** is a room or area where an audience or class receives instruction.~~ ~~**Commercial and industrial storage** is a room, area, or building used for storing items.~~ ~~**Convention, conference, multipurpose and meeting centers** are assembly rooms, areas, or buildings used for~~

Term	Definition
~~OCCUPANCY TYPE *CONT.*~~	~~meetings, conventions and multiple purposes, including but not limited to, dramatic performances, and that has neither fixed seating nor fixed staging.~~ ~~**Corridor** is a passageway or route into which compartments or rooms open.~~ ~~**Dining** is a room or rooms in a restaurant or hotel/motel (other~~ than ~~guest rooms) where meals that are served to the customers will be consumed.~~ ~~**Dormitory** is a building consisting of multiple sleeping quarters and having interior common areas such as dining rooms, reading rooms, exercise rooms, toilet rooms, study rooms, hallways, lobbies, corridors, and stairwells, other than high-rise residential, low-rise residential, and hotel/motel occupancies.~~ ~~**Electrical/mechanical** room is a room in which the building's electrical switchbox or control panels, and/or HVAC controls or equipment is located.~~ ~~**Exercise center/gymnasium** is a room or building equipped for gymnastics, exercise equipment, or indoor athletic activities.~~ ~~**Exhibit** is a room or area that is used for exhibitions that has neither fixed seating nor fixed staging.~~ ~~**Financial transaction** is a public establishment used for conducting financial transactions including the custody, loan, exchange, or issue of money, for the extension of credit, and for facilitating the transmission of funds~~ ~~**General commercial and industrial work** is a room, area, or building in which an art, craft, assembly or manufacturing operation is performed.~~ ~~**High bay**: Luminaires 25 feet or more above the floor.~~ ~~**Low bay**: Luminaires less than 25 feet above the floor.~~ ~~**Grocery sales** is a room, area, or building that has as its primary purpose the sale of foodstuffs requiring additional preparation prior to consumption.~~ ~~**Kitchen/food preparation** is a room or area with cooking facilities and/or an area where food is prepared.~~ ~~**Laundry** is a place where laundering activities occur.~~ ~~**Library** is a repository for literary materials, such as books, periodicals, newspapers, pamphlets and prints, kept for reading or reference.~~ ~~**Lobby, Hotel** is the contiguous space in a hotel/motel between the main entrance and the front desk, including reception, waiting and seating areas.~~ ~~**Lobby, Main entry** is the contiguous space in buildings~~

Term	Definition
~~OCCUPANCY TYPE *CONT.*~~	~~other than hotel/motel that is directly located by the main entrance of the building through which persons must pass, including reception, waiting and seating areas.~~ ~~**Locker/dressing room** is a room or area for changing clothing, sometimes equipped with lockers.~~ ~~**Lounge/recreation** is a room used for leisure activities which may be associated with a restaurant or bar.~~ ~~**Mall** is a roofed or covered common pedestrian area within a mall building that serves as access for two or more tenants.~~ ~~**Medical and clinical care** is a room, area, or building that does not provide overnight patient care and that is used to promote the condition of being sound in body or mind through medical, dental, or psychological examination and treatment, including, but not limited to, laboratories and treatment facilities.~~ ~~**Museum** is a space in which works of artistic, historical, or scientific value are cared for and exhibited.~~ ~~**Office** is a room, area, or building of CBC Group B Occupancy other than restaurants.~~ ~~**Parking garage** is a covered building or structure for the purpose of parking vehicles, which consists of at least a roof over the parking area, often with walls on one or more sides. Parking garages may have fences or rails in place of one or more walls. The structure has an entrance(s) and exit(s), and includes areas for vehicle maneuvering to reach the parking spaces. If the roof of a parking structure is also used for parking, the section without an overhead roof is considered a parking lot instead of a parking garage.~~ ~~**Precision commercial or industrial work** is a room, area, or building in which an art, craft, assembly or a manufacturing operation is performed involving visual tasks of small size or fine detail such as electronic assembly, fine woodworking, metal lathe operation, fine hand painting and finishing, egg processing operations, or tasks of similar visual difficulty.~~ ~~**Religious worship** is a room, area, or building for worship.~~ ~~**Restaurant** is a room, area, or building that is a food establishment as defined in Section 27520 of the Health and Safety Code.~~ ~~**Restroom** is a room or suite of rooms providing personal facilities such as toilets and washbasins.~~ ~~**Retail merchandise sales** is a room, area, or building in which the primary activity is the sale of merchandise.~~ ~~**School** is a building or group of buildings that is~~

Term	Definition
~~OCCUPANCY TYPE *CONT.*~~	~~predominately classrooms and that is used by an organization that provides instruction to students.~~ ~~**Senior housing** is housing other than Occupancy Group I that is specifically for habitation by seniors, including but not limited to independent living quarters, and assisted living quarters. Commons areas may include dining, reading, study, library or other community spaces and/or medical treatment or hospice facilities.~~ ~~**Stairs, active/inactive**, is a series of steps providing passage from one level of a building to another.~~ ~~**Support area** is a room or area used as a passageway, utility room, storage space, or other type of space associated with or secondary to the function of an occupancy that is listed in these regulations.~~ ~~**Tenant lease space** is a portion of a building intended for lease for which a specific tenant is not identified at the time of permit application.~~ ~~**Theater, motion picture**, is an assembly room, a hall, or a building with tiers of rising seats or steps for the showing of motion pictures.~~ ~~**Theater, performance**, is an assembly room, a hall, or a building with tiers of rising seats or steps for the viewing of dramatic performances, lectures, musical events and similar live performances.~~ ~~**Transportation function** is the ticketing area, waiting area, baggage handling areas, concourse, or other areas not covered by primary functions in Table 146-C in an airport terminal, bus or rail terminal or station, subway or transit station, or marine terminal.~~ ~~**Vocational room** is a room used to provide training in a special skill to be pursued as a trade.~~ ~~**Waiting area** is an area other than a hotel lobby or main entry lobby normally provided with seating and used for people waiting.~~ ~~**Wholesale showroom** is a room where samples of merchandise are displayed.~~
OCCUPANT SENSOR, LIGHTING,	is a device that automatically turns lights off soon after an area is vacated. The term occupant sensor applies to a device that controls indoor lighting systems. When the device is used to control outdoor lighting systems, it is termed a motion sensor. The device also may be called an occupancy sensor, occupant-sensing device, or vacancy sensor.
OFFICE	See *Nonresidential Functional Area or Type of Use*.
OPEN COOLING TOWER	is an open, or direct contact, cooling tower exposes water directly to the cooling atmosphere, thereby transferring the source heat load from the water directly to the air by a combination of heat and mass transfer.

Term	Definition
OPERABLE SHADING DEVICE	is a device at the interior or exterior of a building or integral with a fenestration product, which is capable of being operated, either manually or automatically, to adjust the amount of solar radiation admitted to the interior of the building.
ORIENTATION, CARDINAL	is one of the four principal directional indicators, north, east, south, and west, which are marked on a compass. Also called cardinal directions.
ORIENTATION, EAST-FACING	is oriented to within 45 degrees of true east, including 45°00'00" south of east (SE), but excluding 45°00'00" north of east (NE).
ORIENTATION, NORTH-FACING	is oriented to within 45 degrees of true north, including 45°00'00" east of north (NE), but excluding 45°00'00' west of north (NW).
ORIENTATION, SOUTH-FACING	is oriented to within 45 degrees of true south including 45°00'00" west of south (SW), but excluding 45°00'00" east of south (SE).
ORIENTATION, WEST-FACING	is oriented to within 45 degrees of true west, including 45°00'00" north of due west (NW), but excluding 45°00'00" south of west (SW).
ORNAMENTAL CHANDELIERS	are ceiling-mounted, close-to-ceiling, or suspended decorative luminaires that use glass, crystal, ornamental metals, or other decorative material and that typically are used in hotel/motels, restaurants, or churches as a significant element in the interior architecture.
ORNAMENTAL LIGHTING	See *Outdoor Lighting*
OUTDOOR AIR (OUTSIDE AIR)	is air taken from outdoors and not previously circulated in the building.
OUTDOOR LIGHTING	definitions include the following: **Building entrance** is any operable doorway in or out of a building, including overhead doors. **Building façade** is the exterior surfaces of a building, not including horizontal roofing, signs, and surfaces not visible from any reasonable viewing location. **Canopy** is a permanent structure, other than a parking garage as defined in Section 101, consisting of a roof and supporting building elements, with the area beneath at least partially open to the elements. A canopy may be freestanding or attached to surrounding structures. A canopy roof may serve as the floor of a structure above. **Carport** is a covered, open-sided structure used solely for the purpose of parking vehicles, consisting of a roof over the parking area. Typically, carports are free-standing or projected from the side of the building and are only two or fewer car lengths deep.

Term	Definition
	Hardscape is an improvement to a site that is paved ~~and~~ or has other structural features, including but not limited to, curbs, plazas, entries, parking lots, site roadways, driveways, walkways, sidewalks, bikeways, water features and pools, storage or service yards, loading docks, amphitheaters, outdoor sales lots, and private monuments and statuary.
	Landscape lighting is lighting that is recessed into ~~the ground~~ or ~~paving;~~ mounted on the ground~~;~~, paving, or raised deck, which is mounted less than 42" above grade~~;~~ or mounted onto trees or trellises, and that is intended to be aimed only at landscape features.
	Lantern is an ornamental outdoor luminaire that uses an electric lamp to replicate a pre-electric lantern, which used a flame to generate light.
	Lighting zone is a geographic area designated by the California Energy Commission that determines requirements for outdoor lighting, including lighting power densities and specific control, equipment or performance requirements. Lighting zones are numbered LZ1, LZ2, LZ3, and LZ4.
	Marquee lighting is a permanent lighting system consisting of one or more rows of many small lights, including light emitting diodes (LEDs), or fiber optic lighting, attached to a canopy.
~~OUTDOOR LIGHTING *CONT.*~~	
	~~definitions include the following:~~
	Ornamental lighting is post-top luminaires, lanterns, pendant luminaires, chandeliers, and marquee lighting.
	Outdoor lighting is all electrical lighting for parking lots, signs, building entrances, outdoor sales areas, outdoor canopies, landscape lighting, lighting for building facades and hardscape lighting.
	Outdoor sales frontage is the portion of the perimeter of an outdoor sales area immediately adjacent to a street, road, or public sidewalk.
	Outdoor sales lot is an uncovered paved area used exclusively for the display of vehicles, equipment or other merchandise for sale. All internal and adjacent access drives, walkway areas, employee and customer parking areas, vehicle service or storage areas are not outdoor sales lot areas, but are considered hardscape.
	Parking lot is an uncovered area for the purpose of parking vehicles. Parking lot is a type of hardscape.
	Paved area is an area that is paved with concrete, asphalt, stone, brick, gravel, or other improved wearing surface,

Term	Definition
	including the curb. **Pendant** is a mounting method in which the luminaire is suspended from above. **Post Top Luminaire** is an ornamental outdoor luminaire that is mounted directly on top of a lamp-post. **Principal viewing location** is anywhere along the adjacent highway, street, road or sidewalk running parallel to an outdoor sales frontage **Public monuments** are statuary, buildings, structures, and/or hardscape on public land. **Sales canopy** is a canopy specifically to cover and protect an outdoor sales area. **Stairways and Ramps.** Stairways are one or more flights of stairs with the necessary landings and platforms connecting them to form a continuous and uninterrupted passage from one level to another. An exterior stairway is open on at least one side, except for required structural columns, beams, handrails and guards. The adjoining open areas shall be either yards, courts or public ways. The other sides of the exterior stairway need not be open. Ramps are walking surfaces with a slope steeper than 5 percent.[i] **Vehicle service station** is a gasoline ~~or~~ , natural gas, diesel, or other fuel dispensing station.
OUTDOOR SALES FRONTAGE	See *Outdoor Lighting.*
OUTDOOR SALES LOT	See *Outdoor Lighting.*
OUTSIDE AIR	See *Outdoor Air.*
~~OVERALL HEAT GAIN~~	~~is the total heat gain through all portions of the building envelope calculated as specified in Section 143 (b) 2 for determining compliance with the Overall Envelope Approach.~~
~~OVERALL HEAT LOSS~~	~~is the total heat loss through all portions of the building envelope calculated as specified in Section 143 (b) 1 for determining compliance with the Overall Envelope Approach.~~
PACKAGED AIR CONDITIONER OR HEAT PUMP	is an air conditioner or heat pump that combines both the condenser and air handling capabilities in a single enclosure or package.
PANEL SIGN	See *Sign, Cabinet.*
PARKING GARAGE	See ~~*Occupancy*~~*Nonresidential Functional Area or Type of Use.*
PARKING LOT	See *Outdoor Lighting.*
PART 6	is Title 24, Part 6 of the California Code of Regulations. See *Building Energy Efficiency Standards.*

Term	Definition
PARTY PARTITION	is a wall, floor, or ceiling that separates the conditioned spaces of two different tenants.
PAVED AREA	See *Outdoor Lighting.*
PENDANT	See *Outdoor Lighting.*
PERM	is equal to 1 grain of water vapor transmitted per 1 square foot per hour per inch of mercury pressure difference.
PERMANENTLY ATTACHED	is attached with fasteners that require additional tools to remove (as opposed to clips, hooks, latches, snaps, or ties).
PERMANENTLY INSTALLED LIGHTING	includes all luminaires attached to the inside or outside of a building or site, including track and flexible lighting system; lighting attached to walls, ceilings, columns, inside or outside of permanently installed cabinets, internally illuminated case work, mounted on poles, in trees, or in the ground; attached to ceiling fans and integral to exhaust fans that are other than exhaust hoods for cooking equipment,. Permanently installed luminaires may have either plug-in or hardwired connections for electric power. Permanently installed lighting does not include portable lighting or lighting that is installed by the manufacturer in refrigerators, stoves, microwave ovens, exhaust hoods for cooking equipment, refrigerated cases, vending machines, food preparation equipment, and scientific and industrial equipment.
PHOTOCONTROL	is an electric device that detects changes in illumination levels then controls lighting load at predetermined illumination levels.
PLENUM	is an air compartment or chamber, including uninhabited crawl space, areas above a ceiling or below a floor, including air spaces below raised floors of computer/data processing centers, or attic spaces, to which one or more ducts are connected and which forms part of either the supply-air, return-air or exhaust air system, other than the occupied space being conditioned.
POOLS, ANSI/NSPI-5	is the American National Standards Institute and National Spa and Pool Institute document entitled “American National Standard for Residential Inground Swimming Pools” 2003 (ANSI/NSPI-5 2003).
POOLS, AUXILIARY POOL LOADS	are features or devices that circulate pool water in addition to that required for pool filtration, including, but not limited to, solar pool heating systems, filter backwashing, pool cleaners, waterfalls, fountains, and spas.
POOLS, BACKWASH VALVE	is a diverter valve designed to backwash filters located between the circulation pump and the filter, including, but not limited to, slide, push-pull, multi-port, and full-flow valves.
POOLS, MULTI-SPEED PUMP	is a pump capable of operating at two (2) or more speeds and includes two-speed and variable-speed pumps.

Term	Definition
POOLS, NSF/ANSI 50	is the NSF International (formerly National Sanitation Foundation) Standard and American National Standards Institute document entitled "Circulation System Components and Related Materials for Swimming Pools, Spas/Hot Tubs" 2005 (NSF/ANSI 50 – 2005).
POOLS, RESIDENTIAL	are permanently installed residential in-ground swimming pools intended to use by a single-family home for noncommercial purposes and with dimensions as defined in ANSI/NSPI-5.
POOR QUALITY LIGHTING TASKS	are visual tasks that require Illuminance Category E or greater, because of the choice of a writing or printing method that produces characters that are of small size or lower contrast than good quality alternatives that are regularly used in offices.
PORTABLE LIGHTING	is lighting with plug-in connections for electric power that is table and freestanding floor lamps, attached to modular furniture, workstation task lights, lights attached to workstation panels, movable displays, and other equipment that is not permanently installed lighting.
POST TOP LUMINAIRE	See *Outdoor Lighting*
PRECISION COMMERCIAL OR INDUSTRIAL WORK	See ~~*Occupancy*~~*Nonresidential Functional Area or Type of Use*.
PRIMARY SIDELIT DAYLIGHT AREA	See *Daylight Area, Primary Sidelit*
PRINCIPAL VIEWING LOCATION	See *Outdoor Lighting*
PRIVATE OFFICE OR WORK AREA	is an office bounded by 72-inch or higher permanent partitions and is no more than 200 square feet. See ~~*Occupancy*~~*Nonresidential Functional Area or Type of Use*.
~~P~~*PROCESS*	is an activity or treatment that is not related to the space conditioning, lighting, service water heating, or ventilating of a building as it relates to human occupancy.
PROCESS LOAD	is a load resulting from a process.
PROCESS SPACE	is a space that is thermostatically controlled to maintain a process environment temperature less than 55º F or to maintain a process environment temperature greater than 90º F for the whole space that the system serves, or that is a space with a space-conditioning system designed and controlled to be incapable of operating at temperatures above 55º F or incapable of operating at temperatures below 90º F at design conditions.
PROPOSED DESIGN	is the proposed building design which must comply with the standards before receiving a building permit. See also Energy Budget and Standard Design.
PUBLIC ADVISER	is the Public Adviser of the Commission.

Term	Definition
PUBLIC AREAS	are spaces generally open to the public at large, customers~~,~~ or congregation members, or similar spaces~~,~~ where occupants need to be prevented from controlling lights for safety, security, or business reasons.
PUBLIC MONUMENTS	See *Outdoor Lighting*
RADIANT BARRIER	is a highly reflective, low emitting material installed at the underside surface of the roof deck and the inside surface of gable ends or other exterior vertical surfaces in attics to reduce solar heat gain into the attic~~, as specified by Section 151(f)2.~~.
RAISED FLOOR	is a floor (partition) over a crawl space, or an unconditioned space, or ambient air.
READILY ACCESSIBLE	is capable of being reached quickly for operation, repair or inspection, without requiring climbing or removing obstacles, or resorting to access equipment.
REAR	See *Back*.
RECOOL	is the cooling of air that has been previously heated by space -conditioning equipment or systems serving the same building.
RECORD DRAWINGS	are drawings that document the as installed location and performance data on all lighting and space conditioning system components, devices, appliances and equipment, including but not limited to wiring sequences, control sequences, duct and pipe distribution system layout and sizes, space conditioning system terminal device layout and air flow rates, hydronic system and flow rates, and connections for the space conditioning system. Record drawings are sometimes called “as builts.”
RECOVERED ENERGY	is energy used in a building that (1) is ~~mechanically~~ recovered from space conditioning, service water heating, lighting, or process equipment after the energy has performed its original function; (2) provides space conditioning, service water heating, or lighting; and (3) would otherwise be wasted.
RECOVERY EFFICIENCY	is one measure of the efficiency of water heaters. It is required for water heating energy calculations for some types of water heaters. It is a measure of the percentage of heat from combustion of gas or oil which is transferred to the water. For non-storage type water heaters, the recovery efficiency is really a thermal efficiency.
REDUCED FLICKER OPERATION	is the operation of a light, in which the light has a visual flicker less than 30% for frequency and modulation.
REFERENCE COMPUTER PROGRAM	is the reference method against which other methods are compared. For the nonresidential standards, the reference computer program is DOE 2.1E. For the low-rise residential standards the reference computer program is CALRES
REFLECTANCE, SOLAR	is the ratio of the reflected solar flux to the incident solar flux.

Term	Definition
REFRIGERANT CHARGE	is to the amount of refrigerant that is installed or "charged" into an air conditioner or heat pump. The *refrigerant* is the working fluid. It is compressed and becomes a liquid as it enters the condenser. The hot liquid is cooled in the condenser and flows to the evaporator where it released through the expansion valve. When the pressure is released, the refrigerant expands into a gas and cools. Air is passed over the evaporator to provide the space cooling. When an air conditioner or heat pump has too much refrigerant (overcharged) the compressor may be damaged. When an air conditioner has too little refrigerant (undercharged), the efficiency of the unit is reduced. A *thermostatic expansion valve (TXV)* can mitigate the impact of improper refrigerant charge.
REFRIGERATED CASE	is a manufactured commercial refrigerator or freezer, including but not limited to display cases, reach-in cabinets, meat cases, and frozen food and soda fountain units.
REFRIGERATED SPACE	is a building or a space that is a refrigerated warehouse, walk-in cooler, or a freezer.
REFRIGERATED WAREHOUSE	is a building or a space constructed for storage of products, where mechanical refrigeration is used to maintain the space temperature at 55° F or less.
REGISTERED DOCUMENT	means the document has been submitted to a HERS provider data registry, and the registry has assigned a unique registration number to the document. The image of the registered document is accessible for printing or viewing to registered users of the provider's data registry via the provider's internet website. The document's unique registration number is embedded onto the document image by the provider's data registry automated functions
REHEAT	is the heating of air that has been previously cooled by cooling equipment or supplied by an economizer.
RELATIVE SOLAR HEAT GAIN	is the ratio of solar heat gain through a fenestration product (corrected for external shading) to the incident solar radiation. Solar heat gain includes directly transmitted solar heat and absorbed solar radiation, which is then reradiated, conducted, or convected into the space.
RELIGIOUS WORSHIP	See *Nonresidential Functional Area or Type of Use*.
RELOCATABLE PUBLIC SCHOOL BUILDING	is a relocatable building as defined by Title 24, Part 1, Section 4-314, which is subject to Title 24, Part 1, Chapter 4, Group 1.
REPAIR	is the reconstruction or renewal ~~of any part of an existing building~~ for the purpose of ~~its~~ maintenance~~. NOTE: Repairs to low-rise residential buildings are not within the scope of these standards.~~ of any component, system, or equipment of an existing building. Replacement of any component, system, or equipment for which there are requirements in the standards is considered an alteration and not a repair.

Term	Definition
RESIDENTIAL BUILDING	See "high-rise residential building" and "low-rise residential building."
~~RESIDENTIAL MANUAL~~*RESIDENTIAL COMPLIANCE MANUAL*	is the manual developed by the ~~Commission~~commission, under Section 25402.1 of the Public Resources Code, to aid designers, builders, and contractors in meeting energy efficiency standards for low-rise residential buildings.
RESIDENTIAL SPACE TYPE	is one of the following: **Bathroom** is a room or area containing a sink used for personal hygiene, toilet, shower, or a tub. **Closet** is a non-habitable room used for the storage of linens, household supplies, clothing, non-perishable food, or similar uses, and which is not a hallway or passageway. **Garage** is a non-habitable building or portion of building, attached to or detached from a residential dwelling unit, in which motor vehicles are parked. **Kitchen** is a room or area used for cooking, food storage and preparation and washing dishes, including associated counter tops and cabinets, refrigerator, stove, ovens, and floor area. **Laundry** is a non-habitable room or space which contains plumbing and electrical connections for a washing machine or clothes dryer. **Storage Building** is a non-habitable detached building used for the storage of tools, garden equipment, or miscellaneous items. **Utility Room** is a non-habitable room or building which contains only HVAC, plumbing, or electrical controls or equipment; and which is not a bathroom, closet, garage, or laundry room.
RESTAURANT	See *Nonresidential Functional Area or Type of Use*.
RESTROOM	See *Nonresidential Functional Area or Type of Use*.
RETAIL MERCHANDISE SALES	See *Nonresidential Functional Area or Type of Use*.
RIGHT SIDE	is the right side of the building as one faces the front facade from the outside (see *Front*). This designation is used to indicate the orientation of fenestration and other surfaces, especially in model homes that are constructed in multiple orientations.
ROOF	~~See *Exterior Roof/Ceiling*.~~is the outside cover of a building or structure including the structural supports, decking, and top layer that is exposed to the outside with a slope less than 60 degrees from the horizontal.
ROOF, LOW-SLOPED	is a roof that has a ratio of rise to run of 2:12 or less (9.5 degrees from the horizontal).

Term	Definition
ROOF, STEEP-SLOPED	is a roof that has a ratio of rise to run of greater than 2:12 (9.5 degrees from the horizontal).
ROOFING PRODUCT	is the top layer(s) of the roof that is exposed to the outside, which has properties including but not limited to reflectance, emittance, and mass.
RUNOUT	is piping that is no more than 12 feet long and that connects to a fixture or an individual terminal unit .
R-VALUE	is the measure of the thermal resistance of insulation or any material or building component expressed in (ft²-hr ºF)/Btu. See *Thermal Resistance*
SALES CANOPY	See *Outdoor Lighting*
SC	See *Shading Coefficient.*
SCHOOL~~:~~	See ~~*Occupancy*~~*Nonresidential Functional Area or Type of Use*.
SCIENTIFIC EQUIPMENT	is measurement, testing or metering equipment used for scientific research or investigation, including but not limited to manufactured cabinets, carts and racks.
SCONCE	is a wall mounted ornamental luminaire.
SEASONAL ENERGY EFFICIENCY RATIO (SEER)	is the total cooling output of ~~a central~~an air conditioner in Btu during its normal usage period for cooling divided by the total electrical energy input in watt-hours during the same period, as determined using the applicable test method in the Appliance Efficiency Regulations.
SECONDARY SIDELIT DAYLIGHT AREA	See *Daylight Area, Secondary Sidelit*
SENIOR HOUSING	See *Nonresidential Functional Area or Type of Use.*
SERIES FAN-POWERED TERMINAL UNIT	is a terminal unit that combines a VAV damper in series with a downstream fan which runs at all times that the terminal unit is supplying air to the space.
SERVICE WATER HEATING	is heating of water for sanitary purposes for human occupancy, other than for comfort heating.
SHADING	is the protection from heat gains because of direct solar radiation by permanently attached exterior devices or building elements, interior shading devices, glazing material, or adherent materials. ~~Permanently attached means (a) attached with fasteners that require additional tools to remove (as opposed to clips, hooks, latches, snaps, or ties); or (b) required by the CBC for emergency egress to be removable from the interior without the use of tools.~~

Term	Definition
SHADING COEFFICIENT (SC)	is the ratio of the solar heat gain through a fenestration product to the solar heat gain through an unshaded 1/8-inch-thick clear double strength glass under the same set of conditions. For nonresidential, high-rise residential, and hotel/motel buildings, this shall exclude the effects of mullions, frames, sashes, and interior and exterior shading devices. ~~See also *Solar Heat Gain Coefficient.*~~
SIDE FINS	are vertical shading elements mounted on either side of a glazed opening that can protect the glazing from lateral low angle sun penetration.
SIGN	definitions include the following: **Electronic Message Center (EMC)** is a pixilated image producing electronically controlled sign formed by any light source. Bare lamps used to create linear lighting animation sequences through the use of chaser circuits, also known as "chaser lights" are not consider an EMC. **Illuminated face** is a side of a sign that has the message on it. For an exit sign it is the side that has the word "EXIT" on it. **Sign, cabinet** is an internally illuminated sign consisting of frame and face(s), with a continuous translucent message panel, also referred to as a panel sign **Sign, channel letter** is an internally illuminated sign with multiple components, each built in the shape of an individual three dimensional letter or symbol that are each independently illuminated, with a separate translucent panel over the light source for each element. **Sign, double-faced** is a sign with two parallel opposing faces. **Sign, externally illuminated** is any sign or a billboard that is lit by a light source that is external to the sign directed towards and shining on the face of the sign. **Sign, internally illuminated** is a sign that is illuminated by a light source that is contained inside the sign where the message area is luminous, including cabinet signs and channel letter signs. **Sign, traffic** is a sign for traffic direction, warning, and roadway identification. **Sign, unfiltered** is a sign where the viewer perceives the light source directly as the message, without any colored filter between the viewer and the light source, including neon, cold cathode, and LED signs.

Term	Definition
SINGLE PACKAGE VERTICAL AIR CONDITIONER (SPVAC):	is a type of air-cooled small or large commercial package air-conditioning and heating equipment; factory assembled as a single package having its major components arranged vertically, which is an encased combination of cooling and optional heating components; is intended for exterior mounting on, adjacent interior to, or through an outside wall; and is powered by single or three-phase current. It may contain separate indoor grille(s), outdoor louvers, various ventilation options, indoor free air discharge, ductwork, wall plenum, or sleeve. Heating components may include electrical resistance, steam, hot water, gas, or no heat but may not include reverse cycle refrigeration as a heating means.
SINGLE PACKAGE VERTICAL HEAT PUMP (SPVHP):	is an SPVAC that utilizes reverse cycle refrigeration as its primary heat source, with secondary supplemental heating by means of electrical resistance, steam, hot water, or gas.[i]
SINGLE ZONE	is an HVAC system with a supply fan (and optionally a return fan) and heating and/or cooling heat exchangers (e.g. DX coil, chilled water coil, hot water coil, furnace, electric heater) that serves a single thermostatic zone. This system may or may not be constant volume.
SITE SOLAR ENERGY	is ~~natural daylighting, or~~ thermal, chemical, or electrical energy derived from direct conversion of incident solar radiation at the building site.
SITE-BUILT FENESTRATION	is fenestration designed to be field-glazed or field assembled units using specific factory cut or otherwise factory formed framing and glazing units that are manufactured with the intention of being assembled at the construction site and are provided with an NFRC label certificate for site-built fenestration. Examples of site-built fenestration include storefront systems, curtain walls, and atrium roof systems.
SKYLIGHT	is ~~glazing having~~fenestration installed on a ~~slope~~roof less than 60 degrees from the horizontal~~ with conditioned or unconditioned space below~~.
SKYLIGHT AREA	is the area of the rough opening for the skylight.
SKYLIGHT TYPE	is ~~a type~~one of ~~skylight assembly having a specific solar heat gain coefficient and U-factor, whether~~the following three types of skylights: glass mounted on a curb, glass not mounted on a curb or plastic (assumed to be mounted on a curb).
SKYLIT DAYLIGHT AREA	See *Daylight Area, Skylit*
SLAB-ON-GRADE	is an exterior concrete floor in direct contact with the earth below the building.
SMACNA	is the Sheet Metal and Air-conditioning Contractors National Association.
SMACNA RESIDENTIAL COMFORT SYSTEM INSTALLATION STANDARDS MANUAL	is the Sheet Metal Contractors' National Association document entitled "Residential Comfort System Installation Standards Manual, Seventh Edition." (1998).

Term	Definition
SOFT COAT	is a low emissivity metallic coating applied to glass, which will be installed in a fenestration product through a sputter process where molecules of metals such as stainless steel or titanium are sputtered onto the surface of glass. Soft coats generally have lower emissivity than hard coats.
SOLAR HEAT GAIN COEFFICIENT (SHGC)	is the ratio of the solar heat gain entering the space through the fenestration area to the incident solar radiation. Solar heat gain includes directly transmitted solar heat and absorbed solar radiation, which is then reradiated, conducted, or convected into the space.
SOLAR HEAT GAIN COEFFICIENT, CENTER OF GLAZING ($SHGC_C$)	is the SHGC for the center of glazing area.
SOLAR HEAT GAIN COEFFICIENT, TOTAL FENESTRATION PRODUCT (SHGC OR $SHGC_T$)	is the SHGC for the total fenestration product.
SOLAR REFLECTANCE	See *Reflectance.*
SOLAR REFLECTANCE INDEX (SRI)	is a measure of the roof's ability to reject solar heat which includes both reflectance and emittance.
SOUTH-FACING	See *Orientation.*
SPA	is a vessel that contains heated water in which humans can immerse themselves, is not a pool, and is not a bathtub.
SPACE-CONDITIONING SYSTEM	is a system that may consist of but not limited to chiller/compressor, air handler unit, cooling and heating coils, air and water cooled condenser, economizers, and the air distribution system, which provide either collectively or individually heating, ventilating, or cooling within or associated with conditioned spaces in a building.
SPACER, ALUMINUM	is a metal channel that is used either against the glass (sealed along the outside edge of the insulated glass unit), or separated from the glass by one or more beads of caulk, which is used to separate panes of glass in an insulated glass unit.
SPACER, INSULATING	is a non-metallic, relatively non-conductive material, usually of rubber compounds, that is used to separate panes of glass in an insulated glass unit.
SPACER, OTHER	is a wood, fiberglass, or composite material that is used as a spacer between panes of glass in insulated glass units.
SPACER, SQUIGGLE	is a flexible material, usually butyl, formed around a thin corrugated aluminum strip that is used as a spacer in insulated glass units.
SPECIFIC HEAT	is the quantity of heat that must be added to a unit mass of a material to increase its temperature by one degree. Typical units are Btu/ºF-lb.
SPLIT SYSTEM AIR CONDITIONER OR HEAT PUMP	~~Is~~is an air conditioner or heat pump that has physically separate condenser and air handling units that work together as a single cooling system.

Term	Definition
STAIRS, ACTIVE / INACTIVE	See ~~*Occupancy*~~*Nonresidential Functional Area or Type of Use*.
STANDARD DESIGN	is a hypothetical building that is used to calculate the custom budget for nonresidential and residential buildings. A new building or addition alone complies with the standards if the predicted source energy use of the *proposed design* is the same or less than the annual budget for space conditioning and water heating of the Standard Design. The Standard Design is substantially similar to the Proposed Design, except it is in exact compliance with the prescriptive requirements and the mandatory measures.
STANDARDS	See *Building Energy Efficiency Standards*.
STANDBY LOSS, BTU/HR	is the heat lost per hour from the stored water above room temperature. It is one of the measures of efficiency of water heaters required for water heating energy calculations for some types of water heaters. This standby loss is expressed as Btu/hr.
STANDBY LOSS, PERCENT	is the ratio of heat lost per hour to the heat content of the stored water above room temperature. It is one of the measures of efficiency of water heaters required for water heating energy calculations for some types of water heaters. Standby loss is expressed as a percentage.
STEPPED DIMMING	~~is a lighting control method that varies the light output of lamps in one or more predetermined discrete steps between full light output and off.~~See *Dimming, Stepped*.
STEPPED SWITCHING	is a lighting control method that varies the light output of a lighting system with the intent of maintaining approximately the relative uniformity of illumination by turning off alternate groups of lamps or luminaires.
STORAGE, COLD,	is a storage area within a refrigerated warehouse where space temperatures are maintained at or above 32° F.
STORAGE, COOL	is a storage area within a refrigerated warehouse where space temperatures are maintained between 32° F and 55° F.
STORAGE, FROZEN	is a storage area within a refrigerated warehouse where the space temperatures are maintained below 32° F.
SUBORDINATE OCCUPANCY	is any occupancy type, in mixed occupancy buildings, that is not the dominant occupancy. See *Dominant Occupancy, Mixed Occupancy*.
SUCTION LINE	is the refrigerant line that leads from the evaporator to the condenser in a split system air conditioner or heat pump. This line is insulated since it carries refrigerant at a low temperature.
SUPPORT AREA	See ~~*Occupancy*~~*Nonresidential Functional Area or Type of Use*.

Term	Definition
SUSPENDED FILMS	are low-e coated plastic films stretched between the elements of the spacers between panes of glazing; acts as a reflector to slow the loss of heat from the interior to the exterior.
SYSTEM	is a combination of equipment, controls, accessories, interconnecting means, or terminal elements by which energy is transformed to perform a specific function, such as space conditioning, service water heating, or lighting.
TASK LIGHTING	is lighting that is designed specifically to illuminate a task location, and that is generally confined to the task location. ~~See also *Lighting*, *General Lighting*.~~
TDV ENERGY	See *Time Dependent Valuation (TDV) Energy*.
TEMPORARY LIGHTING	is a lighting installation ~~where temporary~~with plug-in connections~~, such as cord and plug, are used for electric power, and for which the installation~~ that does not persist beyond 60 consecutive days or more than 120 days per year.
TENANT LEASE SPACE	See *Nonresidential Functional Area or Type of Use*
TENANT ~~LEASE~~ SPACE	~~See *Occupancy Type*~~is a portion of a building intended for occupancy by a single tenant.
THEATER, MOTION PICTURE	See ~~*Occupancy*~~*Nonresidential Functional Area or Type of Use*.
THEATER, PERFORMANCE:	See ~~*Occupancy*~~*Nonresidential Functional Area or Type of Use*.
THERMAL BREAK WINDOW FRAME	is metal fenestration frames that are not solid metal from the inside to the outside, but are separated in the middle by a material, usually urethane, with a lower conductivity.
THERMAL CONDUCTIVITY	is the quantity of heat that will flow through a unit area of the material per hour when the temperature difference through the material is one degree.
THERMAL EMITTANCE	See *Emittance, Thermal.*
THERMAL MASS	is solid or liquid material used to store heat for later heating use or for reducing cooling requirements.
THERMAL RESISTANCE (R)	is the resistance of a material or building component to the passage of heat in (hr. x ft.^{2} x ºF)/Btu.
THERMOSTATIC EXPANSION VALVE (TXV)	is a refrigerant metering valve, installed in an air conditioner or heat pump, which controls the flow of liquid refrigerant entering the evaporator in response to the superheat of the gas leaving it.
THROW DISTANCE	is the distance between the luminaire and the center of the plane lit by the luminaire on a display.

Term	Definition
TIME DEPENDENT VALUATION (TDV) ENERGY	is the time varying energy caused to be used ~~at~~ by the building to provide space conditioning and water heating and for specified buildings lighting~~, accounting~~. TDV energy accounts for the energy used at the building site and consumed in producing and in delivering energy to a site, including, but not limited to, power generation, transmission and distribution losses.
TITLE 24	is all of the building standards and associated administrative regulations published in Title 24 of the *California Code of Regulations*. The *Building Energy Efficiency Standards* are contained in Part 6. Part 1 contains the administrative regulations for the building standards.
TRAFFIC SIGN	See *Sign.*
U-FACTOR	is the overall coefficient of thermal transmittance of a construction assembly, in Btu/(hr. x ft.^{2} x ^{o}F), including air film resistance at both surfaces.
U~~IMC~~-FACTOR, CENTER OF GLAZING (U-FACTOR$_C$)	~~See *Unit Interior Mass Capacity*~~is the U-Factor for the center of glazing area.
U-FACTOR, TOTAL FENESTRATION PRODUCT (U-FACTOR OR U-FACTOR$_T$)	is U-Factor for the total fenestration product.
UIMC	See *Unit Interior Mass Capacity.*
UL	is the Underwriters Laboratories.
UL 1598	is the Underwriters Laboratories document entitled “Standard for Luminaires,” 2000.
UL 181	is the Underwriters Laboratories document entitled “Standard for Factory-Made Air Ducts and Air Connectors,” 1996.
UL 181A	is the Underwriters Laboratories document entitled “Standard for Closure Systems for Use With Rigid Air Ducts and Air Connectors,” 1994.
UL 181B	is the Underwriters Laboratories document entitled “Standard for Closure Systems for Use With Flexible Air Ducts and Air Connectors,” 1995.
UL 723	is the Underwriters Laboratories document entitled “Standard for Test for Surface Burning Characteristics of Building Materials,” 1996.
UL 727	is the Underwriters Laboratories document entitled “Standard for Oil-Fired Central Furnaces,” 1994.
UL 731	is the Underwriters Laboratories document entitled “Standard for Oil-Fired Unit Heaters,” 1995.
UL®	is the Underwriters Laboratories.
UNCONDITIONED SPACE	is enclosed space within a building that is not directly conditioned, or indirectly conditioned.
UNFILTERED SIGN	See *Sign.*

Term	Definition
UNIT INTERIOR MASS CAPACITY (UIMC)	is the amount of effective heat capacity per unit of thermal mass, taking into account the type of mass material, thickness, specific heat, density and surface area.
U-VALUE	See *U-factor*.
VACANCY SENSOR, LIGHTING,	is an occupant sensor for which the lights must be manually turned on but the sensor automatically turns the lights off soon after an area is vacated. The device also may be called a manual-on occupant sensor.
VAPOR BARRIER	is a material that has a permeance of one perm or less and that provides resistance to the transmission of water vapor.
VARIABLE AIR VOLUME (VAV) SYSTEM	is a space-conditioning system that maintains comfort levels by varying the volume of supply air to the zones served.
VEHICLE SERVICE STATION CANOPY	See *Outdoor Lighting.*
VENDING MACHINE	is a machine for vending and dispensing refrigerated or non-refrigerated food and beverages or general merchandise.
VENTILATION AIR	is that portion of supply air which comes from outside plus any recirculated air that has been treated to maintain the desired quality of air within a designated space. See also *Outside Air*.
VERTICAL GLAZING	See *Window*.
VERY VALUABLE MERCHANDISE	is rare or precious objects, including, but not limited to, jewelry, coins, small art objects, crystal, ~~china~~, ceramics, or silver, the selling of which involves customer inspection of very fine detail from outside of a locked case.
VINYL WINDOW FRAME	is a fenestration frame constructed with a polyvinyl chloride (PVC) which has a lower conductivity than metal and a similar conductivity to wood.
~~VISIBLE LIGHT TRANSMITTANCE (VLT)~~ *VISIBLE TRANSMITTANCE (VT)*	is the ratio (expressed as a decimal) of visible light that is transmitted through a glazing ~~material~~ to the light that strikes the material.
VISIBLE TRANSMITTANCE, CENTER OF GLAZING (VT_C)	is the VT for the center of glazing area.
VISIBLE TRANSMITTANCE, TOTAL FENESTRATION PRODUCT (VT OR VT_T)	is the VT for the total fenestration product.
VOCATIONAL ROOM	See *Nonresidential Functional Area or Type of Use*.
WAITING AREA	See Nonresidential Functional Area or Type of Use
WALL TYPE	is a type of wall assembly having a specific heat capacity, framing type, and U-factor.
WEATHERSTRIPPING	is a specially designed strip, seal or gasket attached to doors and windows to prevent infiltration and exfiltration through cracks around the openings. Weatherstripping is one of the mandatory requirements for all new residential construction. See *Infiltration, Exfiltration*.

Term	Definition
WEIGHTED AVERAGING	is an arithmetic technique for determining an average of differing values for the members of a set by weighting each value by the extent to which the value occurs. In some cases when two or more types of a building feature, material or construction assembly occur in a building, a weighted average of the different types may be sufficiently accurate to represent the energy impact of each type considered separately.
WEST-FACING	~~is oriented to within 45 degrees of true west, including 45°00'00" north of due west (NW), but excluding 45°00'00" south of west (SW).~~See *Orientation*.
WHOLESALE SHOWROOM:	See ~~*Occupancy*~~*Nonresidential Functional Area or Type of Use*.
WINDOW	is fenestration that is not a skylight.
WINDOW AREA	is the area of the surface of a window, plus the area of the frame, sash, and mullions.
WINDOW TYPE	is a window assembly having a specific solar heat gain coefficient, relative solar heat gain, and U-factor.
WINDOW WALL RATIO	is the ratio of the window area to the gross exterior wall area.
WOOD HEATER	is an enclosed wood~~-~~-burning appliance used for space heating and/or domestic water heating.
WOOD STOVE	See *Wood Heater*.
ZONAL CONTROL	is the practice of dividing a residence into separately controlled HVAC zones. This may be done by installing multiple HVAC systems that condition a specific part of the building, or by installing one HVAC system with a specially designed distribution system that permits zonal control. The Energy Commission has approved an alternative calculation method for analyzing the energy impact of zonally controlled space heating and cooling systems. To qualify for compliance credit for zonal control, specific eligibility criteria specified in the Residential ACM Manual must be met.
ZONE, CRITICAL	is a zone serving a process where reset of the zone temperature setpoint during a demand shed event might disrupt the process, including but not limited to data centers, telecom and private branch exchange (PBX) rooms, and laboratories.
ZONE, NON-CRITICAL	is a zone that is not a critical zone.
ZONE, SPACE-CONDITIONING,	is a space or group of spaces within a building with sufficiently similar comfort conditioning requirements so that comfort conditions, as specified in Section 144 (b) 3 or 150 (h), as applicable, can be maintained throughout the zone by a single controlling device.

[i] Definitions taken from the 2006 ICB.

Joint Appendix JA2 – 2008

Appendix JA2 – Reference Weather/Climate Data

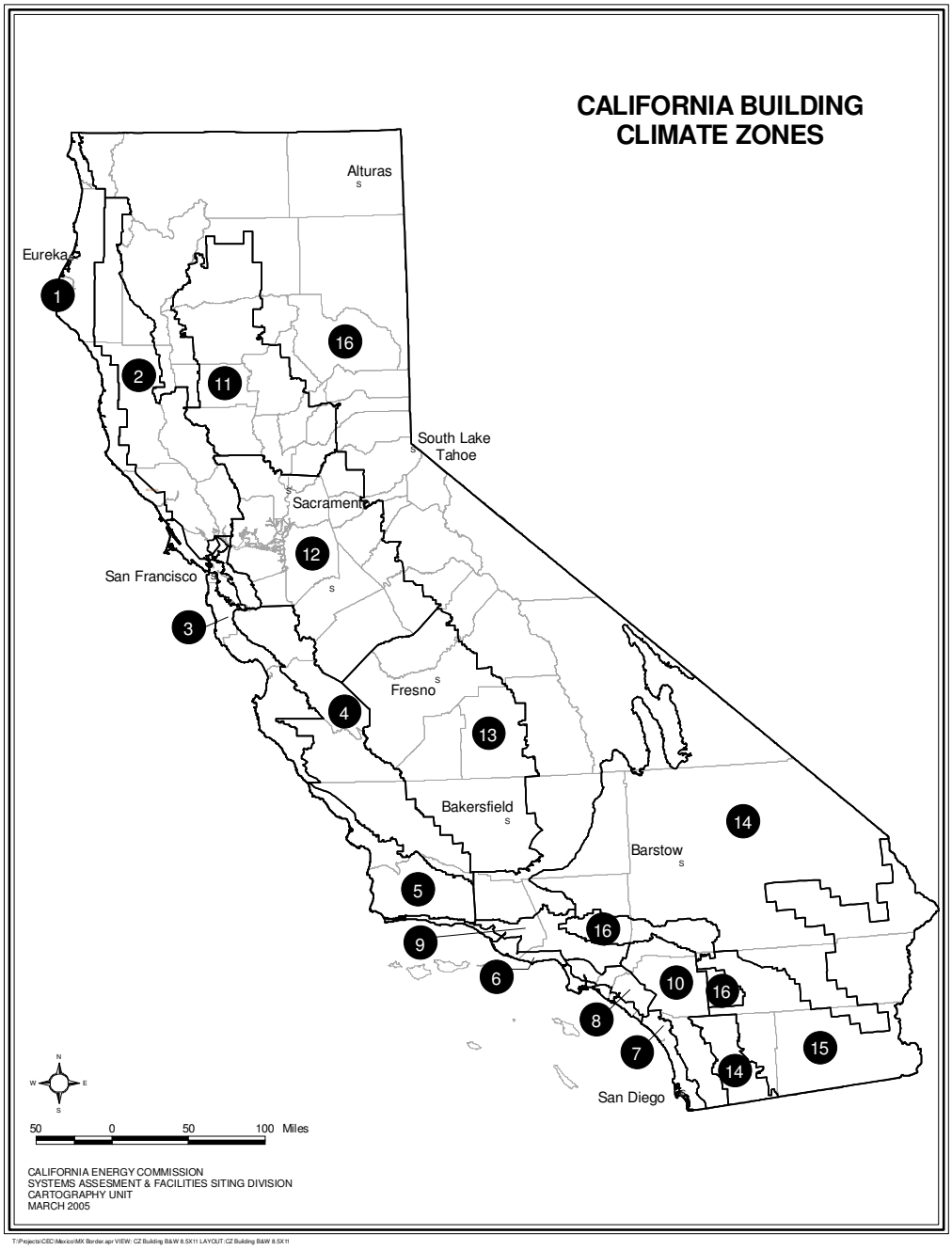

Figure2-II-1 – Climate Zone Map

JA2.1 Weather Data - General

All energy calculations used for compliance with the Standards must use the Commission's sixteen (16) official hourly weather files or modifications of these files adapted for the design day conditions in Table 2-3~~.~~. The modified weather files make the HVAC sizing and energy calculations more realistic for energy compliance simulations. These files are available in electronic form from the Commission in the WYEC2 (Weather Year for Energy Calculations) format and in DOE 2.1E packed weather data format. ~~Temperatures in the WYEC2 files for the sixteen climate zones have been adjusted to the average means and extremes of the weather data of the reliable substations in each climate zone.[1] The WYEC2 data may be adjusted for local conditions, condensed, statistically summarized or otherwise reduced, as long as:~~

~~1.The weather data used to derive the simplified or reduced data is the Commission's official hourly weather data; and,~~

~~2.The ACM program meets all of the certification tests using the reduced weather data.~~

~~Whatever weather data and/or weather data reduction methods are used, ACM approval is contingent upon approved weather data being used for all compliance runs.~~

~~There are 16 climate zones, each with 8,760 hourly records containing~~ Each weather file contains ~~raw~~ data on a variety of ambient conditions such as:

- Dry bulb temperature
- Wet bulb temperature
- Wind speed and direction
- Direct solar radiation
- Diffuse radiation

~~Each climate zone file includes the non-temperature data of a particular city whose annual climate data has been judged representative of the construction locations within that zone. The values listed by climate zone and the nominal city location for each climate zone in Table 2.3 in this section must be used for any given climate zone if the ACM does not automatically make local city weather adjustments to the files.~~

~~As indicated above the reference method uses local city ASHRAE design data to adjust the climate zone weather data. These adjustments customize the temperature data, especially the extremes, to conform to the ASHRAE design data statistics for the city in question. This makes the HVAC sizing and energy calculations more realistic for energy compliance simulations.~~

[1] See *Climate Zone Weather Data Analysis and Revision Project*, Final Consultant Report, CEC Publication # P400-92-004, for more detail.

Table 2~~1~~-1 –California Standard Climate Zone Summary

Note: The alternative weather files modified for local design conditions use the specific latitude, longitude and elevation of the selected city.

Climate Zone	City	Latitude	Longitude	Elevation
1	Arcata	40.8	124.2	43
2	Santa Rosa	38.4	122.7	164
3	Oakland	37.7	122.2	6
4	Sunnyvale	37.4	122.4	97
5	Santa Maria	34.9	120.4	236
6	Los Angeles AP	33.9	118.5	97
7	San Diego	32.7	117.2	13
8	El Toro	33.6	117.7	383
9	Burbank	34.2	118.4	655
10	Riverside	33.9	117.2	1543
11	Red Bluff	40.2	122.2	342
12	Sacramento	38.5	121.5	17
13	Fresno	36.8	119.7	328
14	China Lake	35.7	117.7	2293
15	El Centro	32.8	115.6	-30
16	Mt. Shasta	41.3	122.3	3544

JA2.1.1 Counties and Cities with Climate Zone Designations

The following pages are a listing of California counties and cities with a climate zone designation for each. This information represents an abridged version of the Commission publication *California Climate Zone Descriptions* which contains detailed survey definitions of the sixteen climate zones.

Table ~~1~~2-2 – Counties and Cities with Climate Zone Designations

City	County	CZ
A		
Abbotts Lagoon	Marin	3
Academy	Fresno	13
Acampo	San Joaquin	12
Acolita	Imperial	15
Actis	Kem	14
Acton	Los Angeles	14
Adelaida	San Luis Obispo	4
Adelanto	San Bernardino	14
Adin	Modoc	16
Adobe	Kem	13
Afton	San Bernardino	14
Ager	Siskiyou	16
Agoura Hills	Los Angeles	9
Agua Caliente Canyon	Santa Barbara	5
Agua Caliente Springs	San Diego	15
Agua Duice	Los Angeles	9
Aguanga	Riverside	10
Ahwahnee	Madera	13
Airport Lake	Inyo	14
Alameda	Alameda	3
Alamo	Contra Costa	12
Alamo River	Imperial	15
Albany	Alameda	3
Alberhill	Riverside	10
Albion	Mendocino	1
Alderpoint	Humboklt	2
Alhambra	Los Angeles	9
Alisal	Monterey	3
Alisal Slough	Monterey	3
Aliso Canyon	Los Angeles	16
Aliso Viejo	Orange	8
Alleghany	Sierra	16
Allendale	Solano	12
Allensworth	Tulare	13
Almaden A.F.S.	Santa Clara	4
Almanor	Plumas	16
Alondra Park	Los Angeles	6
Alpaugh	Tulare	13
Alpine	San Diego	10

City	County	CZ
Alta	Placer	16
Alta Loma	San Bernardino	10
Alta Sierra	Kem	16
Altadena	Los Angeles	9
Altamont	Alameda	12
Altaville	Calaveras	12
Alton	Humboklt	1
Alturas	Modoc	16
Alviso	Santa Clara	4
Amador	Amador	12
Amargosa Range	Inyo	14
Amargosa River	Inyo	14
Amboy	San Bernardino	15
Ambrose	Modoc	16
American Canyon	Napa	2
American River	Sacramento	12
American River (Silver Fork)	El Dorado	16
Amos	Imperial	15
Anacapa Island	Ventura	6
Anaheim	Orange	8
Anchor Bay	Mendocino	1
Anderson	Shasta	11
Anderson Lake	Santa Clara	4
Andrade	Imperial	15
Angel Island	Marin	3
Angels Camp	Calaveras	12
Angiola	Tulare	13
Angwin	Napa	2
Annapolis	Sonoma	1
Antelope	Sacramento	12
Antelope Center	Los Angeles	14
Antelope Lake	Plumas	16
Antelope Plain	Kem	13
Antelope Valley	Los Angeles	14
Antioch	Contra Costa	12
Anza	Riverside	16
Apache Canyon	Ventura	16
Apple Valley	San Bernardino	14
Applegate	Placer	11
Aptos	Santa Cruz	3
Araz Wash	Imperial	15
Arbuckle	Colusa	11
Arcadia	Los Angeles	9
Arcata	Humboklt	1
Arcata Bay	Humboklt	1
Arden Town	Sacramento	12
Argus	San Bernardino	14
Argus Peak	Inyo	16
Argus Range	Inyo	16
Arlington	Riverside	10
Armona	Kings	13
Arnold	Calaveras	16
Arnold	Mendocino	2
Aromas	Monterey	3
Arrowhead Junction	San Bernardino	14
Arroyo Dos Picachos	San Benito	4
Arroyo Grande	San Luis Obispo	5
Arroyo Hondo	Fresno	13
Arroyo Hondo	Santa Clara	4
Arroyo Salada	Imperial	15
Arroyo Seco	Monterey	4
Artesia	Los Angeles	8
Artois	Glenn	11
Arvin	Kem	13
Ash Mountain	Tulare	13
Ashland	Alameda	3
Aspen Valley	Tuolumne	16
Asti	Sonoma	2
Atascadero	San Luis Obispo	4
Atherton	San Mateo	3
Athlone	Merced	12
Atolia	San Bernardino	14
Atwater	Merced	12
Auberry	Fresno	13
Auburn	Placer	11
Auburn Ravine	Sutter	11
Aukum	El Dorado	12
Avalon	Los Angeles	6
Avawatz Mountains	San Bernardino	14
Avenal	Kings	13
Avila Beach	San Luis Obispo	5
Avocado Heights	Los Angeles	16
Azusa	Los Angeles	9
B		
Badger	Tulare	13
Bagby	Mariposa	12
Bagdad	San Bernardino	15
Baker	San Bernardino	14
Bakersfield	Kem	13
Balch	San Bernardino	14
Bald Eagle Mountain	Plumas	16
Baldwin Park	Los Angeles	9
Ballarat	Inyo	14
Ballico	Merced	12
Bangor	Butte	11
Banning	Riverside	15
Banta	San Joaquin	12
Bard	Imperial	15
Bardsdale	Ventura	9
Barkerville	Lake	2
Barkley Mountain	Tehama	16
Barona	San Diego	10
Barrett Dam	San Diego	10
Barrett Junction	San Diego	10
Barstow	San Bernardino	14
Bartle	Siskiyou	16
Bartlett	Inyo	16
Bartlett Springs	Lake	2
Bass Lake	Madera	16
Bassett	Los Angeles	9

City	County	CZ
Baxter	Placer	16
Bayley	Modoc	16
Bayliss	Glenn	11
Bayside	Humboklt	1
Baywood Park	San Luis Obispo	5
Beale Air Force Base	Yuba	11
Bear Buttes	Humboklt	2
Bear River	Amador	16
Bear River	Humboklt	1
Bear River	Sutter	11
Bear River	Yuba	11
Bear Valley	Mariposa	12
Beardsley Lake	Tuolumne	16
Beaumont	Riverside	10
Beckwourth	Plumas	16
Beckwourth Pass	Lassen	16
Beckwourth Pass	Plumas	16
Beegum	Shasta	11
Belden	Plumas	16
Bell	Los Angeles	8
Bell Gardens	Los Angeles	8
Bell Mountain	San Bernardino	14
Bell Mountain Wash	San Bernardino	14
Bell Springs	Mendocino	2
Bell Station	Santa Clara	4
Bella Vista	Shasta	11
Bellflower	Los Angeles	8
Bellota	San Joaquin	12
Belmont	San Mateo	3
Belvedere	Marin	3
Ben Hur	Mariposa	12
Ben Lomond	Santa Cruz	3
Benbow	Humboklt	2
Bend	Tehama	11
Benicia	Solano	12
Bennetts Well	Inyo	14
Benton	Mono	16
Benton Hot Springs	Mono	16
Berenda	Madera	13
Berkeley	Alameda	3
Berry Creek	Butte	11
Berryessa	Santa Clara	4
Berryessa Lake	Napa	2
Berryessa Peak	Napa	2/12
Berryessa Peak	Yolo	2/12
Beswick	Siskiyou	16
Bethany	San Joaquin	12
Bethel Island	Contra Costa	12
Betteravia	Santa Barbara	5
Beverly Hills	Los Angeles	9
Bieber	Lassen	16
Big Bar	Trinity	16
Big Basin	Santa Cruz	3
Big Bear City	San Bernardino	16
Big Bear Lake	San Bernardino	16
Big Bend	Butte	16
Big Bend	Shasta	16
Big Bend	Sonoma	2
Big Creek	Fresno	16
Big Lagoon	Humboklt	1
Big Lake	Shasta	16
Big Maria Mountains	Riverside	15
Big Mountains	Sonoma	2
Big Oak Flat	Tuolumne	12
Big Pine	Inyo	16
Big Pines	Los Angeles	16
Big Rock Wash	Los Angeles	14
Big Sage Reservoir	Modoc	16
Big Springs	Siskiyou	16
Big Sur	Monterey	4
Big Sur River (North Fork)	Monterey	4
Big Tujungs Canyon	Los Angeles	16
Big Valley Mountains	Lassen	16
Big Valley Mountains	Modoc	16
Biggs	Butte	11
Bijou	El Dorado	16
Biola	Fresno	13
Birds Landing	Solano	12
Bishop	Inyo	16
Bissell	Kem	14
Bitterwater	San Benito	4
Black Bear	Siskiyou	16
Black Butte	Glenn	16
Black Butte Reservoir	Glenn	11
Black Butte Reservoir	Tehama	11
Black Butte River	Mendocino	16
Black Canyon Wash	San Bernardino	14
Black Meadow Landing	San Bernardino	15
Black Mountain	Fresno	13
Black Point	Marin	2
Blackhawk	Contra Costa	12
Blackwells Corner	Kem	13
Blairsden	Plumas	16
Blocksburg	Humboklt	2
Bloomfield	Sonoma	2
Bloomington	San Bernardino	10
Blossom	Tehama	11
Blue Canyon	Placer	16
Blue Lake	Humboklt	1
Blunt	Tehama	11
Blythe	Riverside	15
Boca	Nevada	16
Boca Reservoir	Nevada	16
Bodega	Sonoma	1
Bodega Bay	Marin	3
Bodega Bay	Sonoma	1
Bodega Head	Sonoma	1
Bodfish	Kem	16
Bodie	Mono	16
Bolam	Siskiyou	16
Bolinas	Marin	3
Bollibokka Mountain	Shasta	16

City	County	CZ
Bolsa Knolls	Monterey	3
Bombay Beach	Imperial	15
Bonadella Ranchos – Madera	Fresno	13
Bonanza King	Trinity	16
Bonds Corner	Imperial	15
Bonita	Madera	13
Bonny Doon	Santa Cruz	3
Bonsall	San Diego	10
Boonville	Mendocino	2
Bootjack	Mariposa	12
Boron	Kem	14
Borrego	San Diego	15
Borrego Springs	San Diego	15
Bostonia	San Diego	10
Boulder Creek	Santa Cruz	3
Boulevard	San Diego	14
Bowles	Fresno	13
Bowman	Placer	11
Box Canyon	Riverside	15
Boyes Hot Springs	Sonoma	2
Bradbury	Los Angeles	9
Bradley	Monterey	4
Brannan Island	Sacramento	12
Branscomb	Mendocino	1
Brant	San Bernardino	14
Brawley	Imperial	15
Bray	Siskiyou	16
Brea	Orange	8
Breckenridge Mountain	Kem	16
Brentwood	Contra Costa	12
Briceburg	Mariposa	12
Briceland	Humboklt	2
Bridge House	Sacramento	12
Bridgeport	Mono	16
Bridgeport Reservoir	Mono	16
Bridgeville	Humboklt	2
Briones Reservoir	Contra Costa	12
Brisbane	San Mateo	3
Bristol Lake	San Bernardino	15
Bristol Mountains	San Bernardino	14
Broderick	Yolo	12
Brookdale	Santa Cruz	3
Brooks Ranch	Yolo	12
Brown	Kem	14
Browns Valley	Yuba	11
Brownsville	Yuba	11
Bruhel Point	Mendocino	1
Brush Creek	Butte	16
Bryman	San Bernardino	14
Bryson	Monterey	4
Bryte	Yolo	12
Buck Meadows	Mariposa	16
Buckeye	Shasta	11
Buckhorn Lake	Kem	14
Bucks Lake	Plumas	16
Budweiser Wash	San Bernardino	14

City	County	CZ
Buellton	Santa Barbara	5
Buena Park	Orange	8
Buena Vista	Amador	12
Buena Vista Lake Bed	Kem	13
Bull Creek	Humboklt	1
Bull Spring Wash	San Bernardino	14
Bullion Mountains	San Bernardino	14
Buntingville	Lassen	16
Burbank	Los Angeles	9
Burbeck	Mendocino	2
Burdell	Marin	2
Burlingame	San Mateo	3
Burney	Shasta	16
Burney Mountain	Shasta	16
Burnt Ranch	Trinity	16
Burrelield	Fresno	13
Burson	Calaveras	12
Butler Valley	Humboklt	1
Butte City	Glenn	11
Butte Meadows	Butte	16
Butte Valley	Siskiyou	16
Buttonwillow	Kem	13
Byron	Contra Costa	12

C

City	County	CZ
Cabazon	Riverside	15
Cabrillo National Monument	San Diego	7
Cachuma Lake	Santa Barbara	5
Cadiz	San Bernardino	15
Cadiz Lake	San Bernardino	15
Cadiz Valley	San Bernardino	15
Cady Mountains	San Bernardino	14
Cahto Peak	Mendocino	2
Cahuilla	Riverside	16
Cajon Junction	San Bernardino	16
Cajon Summit	San Bernardino	16
Calabasas	Los Angeles	9
Calada	San Bernardino	14
Calaveras Reservoir	Alameda	12/4
Calaveras Reservoir	Santa Clara	12/4
Calaveras River	San Joaquin	12
Calaveritas	Calaveras	12
Calders Corner	Kem	13
Calexico	Imperial	15
Calflax	Fresno	13
Caliente	Kem	16
Caliente Range	San Luis Obispo	4
California City	Kem	14
California Hot Springs	Tulare	16
California Valley	San Luis Obispo	4
Calimesa	Riverside	10
Calipatria	Imperial	15
Calistoga	Napa	2
Callahan	Siskiyou	16
Calneva	Lassen	16

City	County	CZ
Calpella	Mendocino	2
Calpine	Sierra	16
Calwa	Fresno	13
Camanche Reservoir	Amador	12
Camanche Reservoir	Calaveras	12
Camarillo	Ventura	6
Cambria	San Luis Obispo	5
Cameron Park	El Dorado	12
Camino	El Dorado	12
Camino	San Bernardino	14
Camp Angelus	San Bernardino	16
Camp Far West Reservoir	Yuba	11
Camp Meeker	Sonoma	2
Camp Nelson	Tulare	16
Camp Pardee	Calaveras	12
Camp Pendleton	San Diego	10
Camp Richardson	El Dorado	16
Camp Roberts	Monterey	4
Campbell	Santa Clara	4
Campo	San Diego	14
Campo Seco	Calaveras	12
Camptonville	Yuba	16
Canby	Modoc	16
Canoga Park	Los Angeles	9
Cantil	Kem	14
Canyon Lake	Riverside	10
Canyondam	Plumas	16
Capay	Yolo	12
Cape Mendocino	Humboklt	1
Cape San Martin	Monterey	4
Capetown	Humboklt	1
Capistrano Beach	Orange	6
Capitan	Santa Barbara	6
Capitola	Santa Cruz	3
Caples Lake	Alpine	16
Carbona	San Joaquin	12
Carbondale	Amador	12
Cardiff-by-the-Sea	San Diego	7
Caribou	Plumas	16
Carlotta	Humboklt	1
Carlsbad	San Diego	7
Carmel Highlands	Monterey	3
Carmel Valley	Monterey	3
Carmel-by-the-Sea	Monterey	3
Carmichael	Sacramento	12
Carnelian Bay	Placer	16
Carpinteria	Santa Barbara	6
Carr Butte	Modoc	16
Carrizo Plain	San Luis Obispo	4
Carrizo Wash	Imperial	15
Carrville	Trinity	16
Carson	Los Angeles	6
Carson River (East Fork)	Alpine	16
Carson River (West Fork)	Alpine	16
Cartago	Inyo	16
Caruthers	Fresno	13

City	County	CZ
Casa de Oro, Mount Helix	San Diego	10
Cascade Range	Siskiyou	16
Casitas Springs	Ventura	9
Casmalia	Santa Barbara	5
Caspar	Mendocino	1
Cassel	Shasta	16
Castaic	Los Angeles	9
Castella	Shasta	16
Castle Air Force Base	Merced	12
Castro Valley	Alameda	3
Castroville	Monterey	3
Caswell	Los Angeles	16
Cathedral City	Riverside	15
Catheys Valley	Mariposa	12
Catlett	Sutter	11
Cayton	Shasta	16
Cayucos	San Luis Obispo	5
Cazadero	Sonoma	1
Cecilville	Siskiyou	16
Cedar Grove	Fresno	16
Cedar Ridge	Nevada	11
Cedar Wash	San Bernardino	14
Cedarville	Modoc	16
Centerville	Fresno	13
Centerville	Humboklt	1
Centerville	Shasta	11
Centerville Power House	Butte	11
Central Valley	Shasta	11
Ceres	Stanislaus	12
Cerritos	Los Angeles	8
Cerro Alto	San Luis Obispo	4
Cerro Gordo Peak	Inyo	16
Chalfant	Mono	16
Challenge	Yuba	16
Chambless	San Bernardino	15
Chanchelulla Peak	Trinity	16
Charter Oak	Los Angeles	9
Chatsworth	Los Angeles	9
Chemurgic	Stanislaus	12
Cherokee	Butte	11
Cherry Lake	Tuolumne	16
Cherry Valley	Riverside	10
Cherryland	Alameda	3
Chester	Plumas	16
Chicago Park	Nevada	11
Chico	Butte	11
Chidago Canyon	Mono	16
Chilcoot	Plumas	16
China Lake	Kem	14
China Lake	San Bernardino	14
China Peak	Trinity	16
Chinese Camp	Tuolumne	12
Chino	San Bernardino	10
Chino Hills	San Bernardino	10
Chiriaco Summit	Riverside	14
Chloride City	Inyo	16

City	County	CZ
Cholame	San Luis Obispo	4
Cholame Hills	Monterey	4
Chowchilla	Madera	13
Chowchilla Canal	Madera	13
Chrome	Glenn	11
Chualar	Monterey	3
Chubbuck	San Bernardino	15
Chuckwalla Mountains	Riverside	14
Chuckwalla Valley	Riverside	15
Chula Vista	San Diego	7
Cima	San Bernardino	14
Cisco	Placer	16
Citrus Heights	Sacramento	12
City Terrace	Los Angeles	9
Clair Engle Lake	Trinity	16
Claraville	Kem	16
Claremont	Los Angeles	9
Clark Mountain	San Bernardino	14
Clarksburg	Yolo	12
Clarksville	El Dorado	12
Clavey River	Tuolumne	16
Clay	Sacramento	12
Clayton	Contra Costa	12
Clear Creek	Lassen	16
Clear Lake Reservoir	Modoc	16
Clearlake	Lake	2
Clearlake Highlands	Lake	2
Clearlake Oaks	Lake	2
Clearlake Park	Lake	2
Clements	San Joaquin	12
Cleone	Mendocino	1
Clio	Plumas	16
Clipper Gap	Placer	11
Clipper Mills	Butte	16
Cloverdale	Shasta	11
Cloverdale	Sonoma	2
Clovis	Fresno	13
Clyde	Imperial	15
Coachella	Riverside	15
Coachella Valley	Riverside	15
Coalinga	Fresno	13
Coarsegold	Madera	13
Cobb	Lake	2
Coburn	Monterey	4
Codora	Glenn	11
Cohasset	Butte	11
Cold Springs	Tuolumne	16
Coleville	Mono	16
Colfax	Placer	11
College City	Colusa	11
Collegeville	San Joaquin	12
Collierville	San Joaquin	12
Collinsville	Solano	12
Colma	San Mateo	3
Coloma	El Dorado	12
Colorado River	San Bernardino	15

City	County	CZ
Colton	San Bernardino	10
Columbia	Tuolumne	12
Colusa	Colusa	11
Colusa Basin Drainage Canal	Yolo	12
Colusa Trough	Colusa	11
Commerce	Los Angeles	8
Comptche	Mendocino	1
Compton	Los Angeles	8
Concepcion	Santa Barbara	6
Concord	Contra Costa	12
Condrey Mountain	Siskiyou	16
Conejo	Fresno	13
Conner	Kem	13
Constantia	Lassen	16
Cooks Station	Amador	16
Cool	El Dorado	12
Copco	Siskiyou	16
Copperopolis	Calaveras	12
Corcoran	Kings	13
Corcoran Reservoir	Kings	13
Cordelia	Solano	12
Cornell	Los Angeles	6
Cornell	Modoc	16
Corning	Tehama	11
Corning Canal	Tehama	11
Corona	Riverside	10
Corona Del Mar	Orange	6
Coronado	San Diego	7
Corral Hollow	Alameda	12
Corral Hollow	San Joaquin	12
Corralitos	Santa Cruz	3
Corte Madera	Marin	2
Coso Hot Springs	Inyo	16
Coso Junction	Inyo	16
Coso Peak	Inyo	16
Coso Range	Inyo	16
Costa Mesa	Orange	6
Cosumnes River	Sacramento	12
Cotati	Sonoma	2
Coto De Caza	Orange	8
Cottage Grove	Siskiyou	16
Cottonwood	Shasta	11
Cottonwood Canyon	Inyo	14/16
Cottonwood Mountains	Inyo	16
Cottonwood Wash	San Bernardino	14
Cougar	Siskiyou	16
Coulterville	Mariposa	12
Country Club	San Joaquin	12
Courtland	Sacramento	12
Courtright Reservoir	Fresno	16
Covelo	Mendocino	2
Covina	Los Angeles	9
Covington Mill	Trinity	16
Cow Head Lake	Modoc	16
Cowtrack Mountain	Mono	16
Coyote	Santa Clara	4

City	County	CZ
Coyote Lake	San Bernardino	14
Coyote Wash	Imperial	15
Cranmore	Sutter	11
Crannell	Humboklt	1
Crater Mountain	Lassen	16
Crescent City	Del Norte	1
Crescent Mills	Plumas	16
Cressey	Merced	12
Crestline	San Bernardino	16
Creston	San Luis Obispo	4
Crestview	Mono	16
Crockett	Contra Costa	12
Cromberg	Plumas	16
Cross Roads	San Bernardino	15
Crows Landing	Stanislaus	12
Crucero	San Bernardino	14
Crystal Springs Reservoir	San Mateo	3
Cucamonga	San Bernardino	10
Cudahy	Los Angeles	8
Cuddeback Lake	San Bernardino	14
Cuddy Canyon	Kem	16
Cuddy Canyon	Ventura	16
Cuesta Pass	San Luis Obispo	4
Culver City	Los Angeles	8
Cummings	Mendocino	2
Cunningham	Sonoma	2
Cupertino	Santa Clara	4
Curtis	Siskiyou	16
Cutler	Tulare	13
Cutten	Humboklt	1
Cuyama	Santa Barbara	4
Cuyama Valley	San Luis Obispo	4
Cuyama Valley	Santa Barbara	4
Cuyamaca	San Diego	7
Cuyamaca Peak	San Diego	14
Cypress	Orange	8
D		
Daggett	San Bernardino	14
Dairyland	Madera	13
Dairyville	Tehama	11
Dale Lake	San Bernardino	14
Dales	Tehama	11
Dalton	Modoc	16
Daly City	San Mateo	3
Dana	Shasta	16
Dana Point	Orange	6
Danby	San Bernardino	14
Danby Lake	San Bernardino	15
Danville	Contra Costa	12
Dardanelle	Tuolumne	16
Darrah	Mariposa	12
Darwin	Inyo	16
Darwin Wash	Inyo	16
Daulton	Madera	13

City	County	CZ
Davenport	Santa Cruz	3
Davis	Yolo	12
Davis Creek	Modoc	16
Dawes	San Bernardino	14
Day	Modoc	16
Dayton	Butte	11
De Luz	San Diego	10
De Sabla	Butte	11
Deadwood	Trinity	16
Death Valley	Inyo	14
Death Valley Junction	Inyo	14
Death Valley Wash	Inyo	14
Dedrick	Trinity	16
Deep Canyon	Riverside	15
Deep Springs	Inyo	16
Deep Springs Lake	Inyo	16
Deep Water Ship Channel	Solano	12
Deep Water Ship Channel	Yolo	12
Deer Creek Power House	Nevada	16
Deetz	Siskiyou	16
Del Aire	Los Angeles	6
Del Dios	San Diego	10
Del Loma	Trinity	16
Del Mar	San Diego	7
Del Paso Heights	Sacramento	12
Del Rey	Fresno	13
Del Rey Oaks	Monterey	3
Del Rosa	San Bernardino	16
Delano	Kem	13
Delevan	Colusa	11
Delhi	Merced	12
Delleker	Plumas	16
Delta	Shasta	16
Denair	Stanislaus	12
Denny	Trinity	16
Denverton	Solano	12
Derby Acres	Kem	13
Descanso	San Diego	14
Desert	San Bernardino	14
Desert Beach	Riverside	15
Desert Center	Riverside	15
Desert Hot Springs	Riverside	15
Desert Shores	Imperial	15
Desert View Highland	Los Angeles	14
Devils Canyon	Los Angeles	16
Devils Den	Kem	13
Devils Playground	San Bernardino	14
Devils Playground Wash	San Bernardino	14
Devore	San Bernardino	10
Di Giorgio	Kem	13
Diablo	Contra Costa	12
Diablo Range	Santa Clara	4
Diamond Bar	Los Angeles	9
Diamond Mountains	Lassen	16
Diamond Mountains	Plumas	16
Diamond Springs	El Dorado	12

City	County	CZ
Dillon Beach	Marin	3
Dinkey Creek	Fresno	16
Dinsmores	Humboklt	2
Dinuba	Tulare	13
Discovery Bay	Contra Costa	12
Dixie Mountain	Plumas	16
Dixieland	Imperial	15
Dixon	Solano	12
Dobbins	Yuba	11
Dolomite	Inyo	16
Dominguez	Los Angeles	8
Donner Pass	Nevada	16
Donner Pass	Placer	16
Dorrington	Calaveras	16
Dorris	Siskiyou	16
Dos Cabezas	San Diego	15
Dos Palos	Merced	12
Dos Rios	Mendocino	2
Douglas City	Trinity	16
Downey	Los Angeles	8
Downie River	Sierra	16
Downieville	Sierra	16
Doyle	Lassen	16
Dozler	Solano	12
Drake	Santa Barbara	6
Drakes Bay	Marin	3
Drakes Estero	Marin	3
Drakesbad	Plumas	16
Dry Canyon	Ventura	16
Drytown	Amador	12
Duarte	Los Angeles	9
Dublin	Alameda	12
Ducor	Tulare	13
Dudleys	Mariposa	12
Duguynos Canyon	San Diego	15
Dulzura	San Diego	10
Duncan Canyon	Placer	16
Duncans Mills	Sonoma	1
Dunlap	Fresno	13
Dunmovin	Inyo	16
Dunnigan	Yolo	12
Dunsmuir	Siskiyou	16
Durham	Butte	11
Durmid	Riverside	15
Dutch Flat	Placer	16
Duttons Landing	Napa	2
Dwinnell Reservoir	Siskiyou	16
E		
Eagle Crags	San Bernardino	14
Eagle Lake	Lassen	16
Eagle Lake Resort	Lassen	16
Eagle Mountain	Riverside	14
Eagle Mountains	Riverside	14
Eagle Peak	Modoc	16

City	County	CZ
Eagleville	Modoc	16
Earlimart	Tulare	13
Earp	San Bernardino	15
East Biggs	Butte	11
East Compton	Los Angeles	8
East Hemet	Riverside	10
East Highlands	San Bernardino	10
East Irvine	Orange	8
East La Mirada	Los Angeles	9
East Los Angeles	Los Angeles	9
East Mesa	Imperial	15
East Nicolaus	Sutter	11
East Palo Alto	San Mateo	3
East Park Reservoir	Colusa	11
East Pasadena	Los Angeles	16
East Porterville	Tulare	13
East Quincy	Plumas	16
East San Gabriel	Los Angeles	9
East Walker River	Mono	16
East Whittier	Los Angeles	9
Easton	Fresno	13
Ebbetts Pass	Alpine	16
Echo	Mendocino	2
Echo Canyon	Inyo	14
Echo Lake	El Dorado	16
Echo Summit	El Dorado	16
Eder	Placer	16
Edgemont	Riverside	10
Edgewood	Siskiyou	16
Edison	Kem	13
Edna	San Luis Obispo	5
Edwards Air Force Base	Kem	14
Eel Rock	Humboklt	2
El Cajon	San Diego	10
El Capitan Reservoir	San Diego	14
El Centro	Imperial	15
El Cerrito	Contra Costa	3
El Dorado	El Dorado	12
El Dorado Hills	El Dorado	12
El Granada	San Mateo	3
El Mirage	San Bernardino	14
El Mirage Lake	San Bernardino	14
El Monte	Los Angeles	9
El Nido	Merced	12
El Paso de Robles	San Luis Obispo	4
El Paso Mountains	Kem	14
El Portal	Mariposa	16
El Rio	Ventura	6
El Segundo	Los Angeles	6
El Sobrante	Contra Costa	3
El Toro	Orange	8
El Verano	Sonoma	2
Elders Corner	Placer	11
Elderwood	Tulare	13
Electra Power House	Amador	12
Elizabeth Lake Canyon	Los Angeles	16

City	County	CZ
Elk	Mendocino	1
Elk Bayou	Tulare	13
Elk Creek	Glenn	11
Elk Grove	Sacramento	12
Elk River	Humboklt	1
Elk River (North Fork)	Humboklt	1
Elk River (South Fork)	Humboklt	1
Elk Valley	Del Norte	16
Elkhorn Slough	Monterey	3
Elmira	Solano	12
Elsinore	Riverside	10
Elverta	Sacramento	12
Emerald Bay	Orange	6
Emerson Lake	San Bernardino	14
Emeryville	Alameda	3
Emigrant Canyon	Inyo	16
Emigrant Gap	Placer	16
Empire	Stanislaus	12
Encanto	San Diego	10
Encinitas	San Diego	7
Encino	Los Angeles	9
Enterprise	Shasta	11
Erickson	Siskiyou	16
Escalon	San Joaquin	12
Escondido	San Diego	10
Esparto	Yolo	12
Essex	San Bernardino	14
Estero Bay	San Luis Obispo	5
Estrella	San Luis Obispo	4
Estrella River	San Luis Obispo	4
Etiwanda	San Bernardino	14
Etna	Siskiyou	16
Etsel Ridge	Mendocino	16
Ettersburg	Humboklt	1
Eugene	Stanislaus	12
Eureka	Humboklt	1
Eureka Valley	Inyo	16
Exeter	Tulare	13
F		
Fair Oaks	Sacramento	12
Fairfax	Marin	2
Fairfield	Solano	12
Fairmead	Madera	13
Fairmont	Los Angeles	14
Fairview	Tulare	16
Fairville	Sonoma	2
Fales Hot Springs	Mono	16
Falk	Humboklt	1
Fall River	Shasta	16
Fall River Mills	Shasta	16
Fallbrook	San Diego	10
Fallen Leaf Lake	El Dorado	16
Fallon	Marin	3
Famoso	Kem	13

City	County	CZ
Fandango Pass	Modoc	16
Farallon Island	San Francisco	1
Farmersville	Tulare	13
Farmington	San Joaquin	12
Fawnskin	San Bernardino	16
Feather Falls	Butte	16
Feather River	Sutter	11
Feather River (Middle Fork)	Butte	16
Feather River (North Fork)	Butte	16
Fellows	Kem	13
Felton	Santa Cruz	3
Fenner	San Bernardino	14
Fenner Valley	San Bernardino	14
Ferguson Lake	Imperial	15
Fern	Shasta	11
Fernbridge	Humboklt	1
Fernbrook	San Diego	10
Ferndale	Humboklt	1
Fiddletown	Amador	12
Fieldbrook	Humboklt	1
Fields Landing	Humboklt	1
Figarden	Fresno	13
Fillmore	Ventura	9
Finley	Lake	2
Firebaugh	Fresno	13
Fish Camp	Mariposa	16
Fish Springs	Inyo	16
Five Points	Fresno	13
Fleming Fish & Game	Lassen	16
Fletcher	Modoc	16
Florence	Los Angeles	8
Florence Lake	Fresno	16
Florence Peak	Tulare	16
Florin	Sacramento	12
Floriston	Nevada	16
Flournoy	Tehama	11
Flynn	San Bernardino	14
Folsom	Sacramento	12
Fontana	San Bernardino	10
Foothill Farms	Sacramento	12
Forbestown	Butte	16
Ford City	Kem	13
Ford Dry Lake	Riverside	15
Forest	Sierra	16
Forest Falls	San Bernardino	16
Forest Glen	Trinity	16
Forest Hill Divide	Placer	16
Forest Knolls	Marin	2
Forest Ranch	Butte	11
Foresthill	Placer	16
Forestville	Sonoma	2
Forks of Salmon	Siskiyou	16
Fort Baker	Marin	3
Fort Bidwill	Modoc	16
Fort Bragg	Mendocino	1
Fort Dick	Del Norte	1

City	County	CZ
Fort Goff	Siskiyou	16
Fort Jones	Siskiyou	16
Fort MacArthur	San Diego	7
Fort Ord	Monterey	3
Fort Ross	Sonoma	1
Fort Seward	Humboklt	2
Fortuna	Humboklt	1
Fossil Canyon	San Bernardino	14
Foster City	San Mateo	3
Fountain Springs	Tulare	13
Fountain Springs Gulch	Tulare	13
Fountain Valley	Orange	6
Fourth Crossing	Calaveras	12
Fouts Springs	Colusa	11
Fowler	Fresno	13
Foxen Canyon	Santa Barbara	5
Franklin	Sacramento	12
Franklin Well	Inyo	14
Frazier Mountain	Ventura	16
Frazier Park	Kem	16
Fredonyer Peak	Lassen	16
Freedom	Santa Cruz	3
Freel Peak	Alpine	16
Freel Peak	El Dorado	16
Freeman Junction	Kem	14
Freeport	Sacramento	12
Freestone	Sonoma	2
Fremont	Alameda	3
Fremont Peak	San Bernardino	14
Fremont Valley	Kem	14
Fremont Wash	San Bernardino	14
French Camp	San Joaquin	12
French Corral	Nevada	11
French Gulch	Shasta	11
Frenchman Lake	Plumas	16
Freshwater	Humboklt	1
Fresno	Fresno	13
Fresno Slough	Fresno	13
Friant	Fresno	13
Friant Dam	Madera	13
Fried Liver Wash	Riverside	14
Frink	Imperial	15
Fruto	Glenn	11
Fullerton	Orange	8
Fulton	Sonoma	2
Funeral Park	Inyo	14
Furnace Creek Wash	Inyo	14
G		
Galt	Sacramento	12
Ganns	Calaveras	16
Garberville	Humboklt	2
Garden Acres	San Joaquin	12
Garden Grove	Orange	8
Garden Valley	El Dorado	12

City	County	CZ
Gardena	Los Angeles	8
Garey	Santa Barbara	5
Garlock	Kem	14
Gas Point	Shasta	11
Gasquet	Del Norte	16
Gaviota	Santa Barbara	6
Gaviota Pass	Santa Barbara	6
Gazelle	Siskiyou	16
Genesee	Plumas	16
George A.F.B.	San Bernardino	14
Georgetown	El Dorado	12
Gerber	Tehama	11
Geyserville	Sonoma	2
Giant Forest	Tulare	16
Gibson Peak	Trinity	16
Gibsonville	Sierra	16
Gillespie Field	Solano	12
Gillman Hot Springs	Riverside	10
Gilroy	Santa Clara	4
Girvan	Shasta	11
Glacier	Inyo	16
Glamis	Imperial	15
Glasgow	San Bernardino	14
Glass Mountain	Mono	16
Glen Avon	Riverside	10
Glen Ellen	Sonoma	2
Glenburg	Shasta	16
Glencoe	Calaveras	12
Glendale	Los Angeles	9
Glendora	Los Angeles	9
Glenhaven	Lake	2
Glenn	Glenn	11
Glenn Colusa Canal	Colusa	11
Glennville	Kem	16
Goffs	San Bernardino	14
Gold Canyon	Kem	16
Gold Rock Rch	Imperial	15
Gold Run	Placer	16
Golden Gate	Marin	3
Golden Gate	San Francisco	3
Golden Hills	Kem	16
Goldstone	San Bernardino	14
Goldstone Lake	San Bernardino	14
Goleta	Santa Barbara	6
Gonzales	Monterey	3
Goodyears Bar	Sierra	16
Goose Lake	Modoc	16
Goosenest	Siskiyou	16
Gorda	Monterey	3
Gordon Mountain	Del Norte	16
Gordons Well	Imperial	15
Gorman	Los Angeles	16
Goshen	Tulare	13
Goumaz	Lassen	16
Granada Hills	Los Angeles	9
Grand Terrace	San Bernardino	10

City	County	CZ
Grangeville	Kings	13
Granite Bay	Placer	11
Granite Chief	Placer	16
Granite Mountains	San Bernardino	14
Graniteville	Nevada	16
Grant Grove	Tulare	16
Grant Lake	Mono	16
Grapevine	Kem	13
Grass Lake	Siskiyou	16
Grass Valley	Nevada	11
Graton	Sonoma	2
Grayson	Stanislaus	12
Green Valley	Los Angeles	16
Green Valley Lake	San Bernardino	16
Greenacres	Kem	13
Greenfield	Kem	13
Greenfield	Monterey	4
Greenhorn Mountains	Kem	16
Greenhorn Mountains	Tulare	16
Greenview	Siskiyou	16
Greenville	Plumas	16
Greenwater Range	Inyo	14
Greenwood	El Dorado	12
Greenwood	Glenn	11
Grenada	Siskiyou	16
Gridley	Butte	11
Grimes	Colusa	11
Grizzly Bay	Solano	12
Grizzly Flat	El Dorado	16
Grommet	San Bernardino	15
Grossmont	San Diego	7
Grouse Mountain	Modoc	16
Groveland	Tuolumne	12
Grover Beach	San Luis Obispo	5
Grover City	San Luis Obispo	5
Grover Hot Springs	Alpine	16
Guadalupe	Santa Barbara	5
Gualala	Mendocino	1
Gualala River (South Fork)	Mendocino	1
Guatay	San Diego	14
Guerneville	Sonoma	2
Guernsey	Kings	13
Guinda	Yolo	12
Gulf of the Farallones	Marin	3
Gulf of the Farallones	San Francisco	3
Gustine	Merced	12
H		
Hacienda	Sonoma	2
Hacienda Heights	Los Angeles	9
Hackamore	Modoc	16
Haiwee Reservoir	Inyo	16
Hales Grove	Mendocino	1
Half Dome	Mariposa	16
Half Moon Bay	San Mateo	3

City	County	CZ
Halloran Springs	San Bernardino	14
Halls Flat	Lassen	16
Hambone	Siskiyou	16
Hamburg	Siskiyou	16
Hamilton A.F.B.	Marin	2
Hamilton City	Glenn	11
Hammonton	Yuba	11
Hanford	Kings	13
Happy Camp	Siskiyou	16
Harbinson Canyon	San Diego	10
Harbor City	Los Angeles	8
Harden Flat	Tuolumne	16
Hardwick	Kings	13
Harmony	San Luis Obispo	5
Harper Lake	San Bernardino	14
Harris	Humboklt	2
Hart	San Bernardino	14
Hat Creek	Shasta	16
Hathaway Pines	Calaveras	16
Havasu Lake	San Bernardino	15
Havilah	Kem	16
Hawaiian Gardens	Los Angeles	8
Hawes	San Bernardino	14
Hawkinsville	Siskiyou	16
Hawthorne	Los Angeles	8
Hayden Hill	Lassen	16
Hayfield	Riverside	14
Hayfield Lake	Riverside	14
Hayfork	Trinity	16
Hayfork Bally	Trinity	16
Hayward	Alameda	3
Healdsburg	Sonoma	2
Hearst	Mendocino	2
Heber	Imperial	15
Hector	San Bernardino	14
Helena	Trinity	16
Helendale	San Bernardino	14
Helm	Fresno	13
Hemet	Riverside	10
Henderson Village	San Joaquin	12
Henleyville	Tehama	11
Henshaw Dam	San Diego	10
Herald	Sacramento	12
Hercules	Contra Costa	3
Herlong	Lassen	16
Hermosa Beach	Los Angeles	6
Herndon	Fresno	13
Hesperia	San Bernardino	14
Hetch Hetchy Junction	Tuolumne	12
Hetch Hetchy Reservoir	Tuolumne	16
Hi Vista	Los Angeles	14
Hickman	Stanislaus	12
Hidden Hills	Los Angeles	9
Hidden Springs	Los Angeles	16
Hidden Valley	Placer	11
Higgins Corner	Nevada	11

City	County	CZ
High Peak	Glenn	11
Highgrove	Riverside	10
Highland	San Bernardino	10
Highland Park	Los Angeles	9
Highland Peak	Alpine	16
Highway City	Fresno	13
Hillcrest Center	Kem	16
Hills Ferry	Stanislaus	12
Hillsborough	San Mateo	3
Hilmar	Merced	12
Hilt	Siskiyou	16
Hinkley	San Bernardino	14
Hiouchi	Del Norte	1
Hobart Mills	Nevada	16
Hobergs	Lake	2
Hodge	San Bernardino	14
Hog Canyon	San Luis Obispo	4
Hollenbeck	Modoc	16
Hollister	San Benito	4
Hollywood	Los Angeles	9
Hollywood-by-the-Sea	Ventura	6
Holmes	Humboklt	1
Holt	San Joaquin	12
Holtville	Imperial	15
Home Gardens	Riverside	10
Homeland	Riverside	10
Homer	San Bernardino	14
Homer Wash	San Bernardino	14
Homewood	Placer	16
Honcut	Butte	11
Honda	Santa Barbara	5
Honey Lake	Lassen	16
Honeydew	Humboklt	1
Honker Bay	Solano	12
Hood	Sacramento	12
Hooker	Tehama	11
Hoopa	Humboklt	2
Hopeton	Merced	12
Hopland	Mendocino	2
Hornbrook	Siskiyou	16
Hornitos	Mariposa	12
Horse Creek	Siskiyou	16
Horse Flat	Del Norte	16
Horse Lake	Lassen	16
Hotlum	Siskiyou	16
Huasna	San Luis Obispo	5
Huasna River	San Luis Obispo	5
Hughson	Stanislaus	12
Humboldt Bay	Humboklt	1
Hume	Fresno	16
Humphreys Station	Fresno	13
Huntington Beach	Orange	6
Huntington Lake	Fresno	16
Huntington Park	Los Angeles	8
Hupa Mountain	Humboklt	1
Huron	Fresno	13

City	County	CZ
Hyampom	Trinity	16
Hydesville	Humboklt	1
I		
Idlewild	Del Norte	1
Idria	San Benito	4
Idyllwild	Riverside	16
Igo	Shasta	11
Imperial	Imperial	15
Imperial Beach	San Diego	7
Imperial Dam	Imperial	15
Imperial Reservoir	Imperial	15
Imperial Valley	Imperial	15
Inca	Riverside	15
Independence	Inyo	16
Indian Wells	Riverside	15
Indian Wells Valley	Kem	14
Indio	Riverside	15
Industry	Los Angeles	9
Inglenook	Mendocino	1
Inglewood	Los Angeles	8
Ingomar	Merced	12
Ingot	Shasta	11
Inskip	Butte	16
Inskip Hill	Tehama	11
Inverness	Marin	3
Inwood	Shasta	11
Inyo Mountains	Inyo	16
Inyokern	Kem	14
Ione	Amador	12
Iowa Hill	Placer	16
Iris	Imperial	15
Irish Hills	San Luis Obispo	5
Iron Mountain	Shasta	11
Irvine	Orange	8
Irwin	Merced	12
Irwindale	Los Angeles	9
Isabella Reservoir	Kem	16
Isla Vista	Santa Barbara	6
Island Mountain	Trinity	2
Isleton	Sacramento	12
Ivanhoe	Tulare	13
Ivanpah	San Bernardino	14
Ivanpah Lake	San Bernardino	14
Ivanpah Valley	San Bernardino	14
Ivesta	Fresno	13
J		
Jackson	Amador	12
Jackson Meadows Reservoir	Nevada	16
Jackson Meadows Reservoir	Sierra	16
Jacksonville	Tuolumne	12
Jacumba	San Diego	14
Jacumba Mountains	San Diego	15

City	County	CZ
Jalama	Santa Barbara	5
Jamesan	Fresno	13
Jamesburg	Monterey	4
Jamestown	Tuolumne	12
Jamul	San Diego	10
Janesville	Lassen	16
Jasmin	Kem	13
Java	San Bernardino	15
Jellico	Lassen	16
Jenner	Sonoma	1
Jenny Lind	Calaveras	12
Jerome	Siskiyou	16
Jess Valley	Modoc	16
Jimtown	Sonoma	2
Johannesburg	Kem	14
John Wayne AP	Orange	6
Johnsondale	Tulare	16
Johnsons	Humboklt	1
Johnstonville	Lassen	16
Johnsville	Plumas	16
Jolon	Monterey	4
Jonesville	Butte	16
Josephine	Sutter	11
Joshua Tree	San Bernardino	14
Julian	San Diego	14
Junction City	Trinity	16
June Lake	Mono	16
Juniper Hills	Los Angeles	14
Junipero Serra Peak	Monterey	4

K

City	County	CZ
Kalser Peak	Fresno	16
Kandra	Modoc	16
Karlo	Lassen	16
Kaweah	Tulare	13
Kaweah River (Middle Fork)	Tulare	16
Kearsarge	Inyo	16
Kecks Corner	Kem	13
Keddie	Plumas	16
Keddie Ridge	Plumas	16
Keeler	Inyo	16
Keene	Kem	16
Kekawaka	Trinity	2
Kelsey	El Dorado	12
Kelseyville	Lake	2
Kelso	San Bernardino	14
Kelso Wash	San Bernardino	14
Kentfield	Marin	2
Kenwood	Sonoma	2
Keough Hot Springs	Inyo	16
Kephart	Modoc	16
Kerman	Fresno	13
Kern River (South Fork)	Kem	16
Kern River Channel	Kings	13
Kernville	Kem	16
Keswick	Shasta	11
Kettenpom	Trinity	2
Kettleman City	Kings	13
Kettleman Hills	Kings	13
Keyes	Stanislaus	12
King City	Monterey	4
King Range	Humboklt	1
Kings Beach	Placer	16
Kings River	Fresno	13
Kings River	Kings	13
Kings River (Middle Fork)	Fresno	16
Kings River (North Fork)	Fresno	16
Kings River (South Fork)	Fresno	16
Kingsburg	Fresno	13
Kingston Peak	San Bernardino	14
Kingston Wash	San Bernardino	14
Kinyon	Siskiyou	16
Kirkville	Sutter	11
Kirkwood	Sutter	11
Kismet	Madera	13
Klamath	Del Norte	1
Klamath Glen	Del Norte	1
Klamath Mountains	Siskiyou	16
Klamath River	Siskiyou	16
Klamathon	Siskiyou	16
Klondike	San Bernardino	14
Kneeland	Humboklt	1
Knights Ferry	Stanislaus	12
Knights Landing	Yolo	12
Knightsen	Contra Costa	12
Knob	Shasta	16
Knowles	Madera	13
Knoxville	Napa	2
Koehn Lake	Kem	14
Korbel	Humboklt	1
Kramer Junction	San Bernardino	14
Kyburz	El Dorado	16

L

City	County	CZ
L.L. Anderson Reservoir	Placer	16
La Barr	Nevada	11
La Canada Flintridge	Los Angeles	9
La Crescenta	Los Angeles	9
La Grange	Stanislaus	12
La Habra	Orange	9
La Habra Heights	Los Angeles	9
La Honda	San Mateo	3
La Jolla	San Diego	7
La Mesa	San Diego	7
La Mirada	Los Angeles	9
La Palma	Orange	8
La Panza Range	San Luis Obispo	4
La Porte	Plumas	16
La Puente	Los Angeles	9
La Quinta	Riverside	15

City	County	CZ
La Riviera	Sacramento	12
La Selva Beach	Santa Cruz	3
La Verne	Los Angeles	9
La Vina	Madera	13
Ladera Heights	Los Angeles	9
Lafayette	Contra Costa	12
Laguna Beach	Orange	6
Laguna Dam	Imperial	15
Laguna Hills	Orange	6/8
Laguna Niguel	Orange	6
Lake Almanor	Plumas	16
Lake Alpine	Alpine	16
Lake Arrowhead	San Bernardino	16
Lake Berryessa	Napa	2
Lake Britton	Shasta	16
Lake Cachuma	Santa Barbara	5
Lake Casitas	Ventura	9
Lake City	Modoc	16
Lake Crowley	Mono	16
Lake Davis	Plumas	16
Lake Del Valley	Alameda	12
Lake Earl	Del Norte	1
Lake Eleanor	Tuolumne	16
Lake Elsinore	Riverside	10
Lake Forest	Orange	8
Lake Havasu	San Bernardino	15
Lake Henessey	Napa	2
Lake Henshaw	San Diego	14
Lake Isabella	Kem	16
Lake Kaweah	Tulare	13
Lake Los Angeles	Los Angeles	14
Lake Mathews	Riverside	10
Lake McClure	Mariposa	12
Lake Mendocino	Mendocino	2
Lake Mountain	Siskiyou	16
Lake Oroville	Butte	11
Lake Perris	Riverside	10
Lake Pillsbury	Lake	2
Lake Spaulding	Nevada	16
Lake Success	Tulare	13
Lake Tahoe	El Dorado	16
Lake Tahoe	Placer	16
Lake Wyandotte	Butte	11
Lakehead	Shasta	16
Lakeland Village	Riverside	10
Lakeport	Lake	2
Lakeshore	Fresno	16
Lakeside	San Diego	10
Lakeview	Kem	13
Lakeview	Riverside	10
Lakeville	Sonoma	2
Lakewood	Los Angeles	8
Lamoine	Shasta	16
Lamont	Kem	13
Lanare	Fresno	13
Lancaster	Los Angeles	14

City	County	CZ
Landers	San Bernardino	14
Lane Mountain	San Bernardino	14
Lanfair Valley	San Bernardino	14
Larksfield-Wikiup	Sonoma	2
Larkspur	Marin	2
Las Cruces	Santa Barbara	5
Las Flores	San Diego	7
Las Plumas	Butte	11
Lassen Peak	Shasta	16
Last Chance Canyon	Kem	14
Last Chance Range	Inyo	16
Lathrop	San Joaquin	12
Laton	Fresno	13
Latrobe	El Dorado	12
Lava Beds	Modoc	16
Lavic	San Bernardino	14
Lavic Lake	San Bernardino	14
Lawndale	Los Angeles	8
Laws	Inyo	16
Le Grand	Merced	12
Leach Lake	San Bernardino	14
Leavitt	Lassen	16
Leavitt Peak	Mono	16
Leavitt Peak	Tuolumne	16
Lebec	Kem	16
Lee Vining	Mono	16
Lee Wash	Inyo	16
Leech Lake Mountain	Mendocino	16
Leesville	Colusa	11
Leggett	Mendocino	1
Lemon Grove	San Diego	7
Lemoncove	Tulare	13
Lemoore	Kings	13
Lennox	Los Angeles	8
Lenwood	San Bernardino	14
Leona Valley	Los Angeles	14
Leucadia	San Diego	7
Lewiston	Trinity	16
Lewiston Lake	Trinity	16
Liberty Farms	Solano	12
Libfarm	Solano	12
Likely	Modoc	16
Lincoln	Placer	11
Lincoln Village	San Joaquin	12
Linda	Yuba	11
Linda Vista	San Diego	7
Lindcove	Tulare	13
Linden	San Joaquin	12
Lindsay	Tulare	13
Litchfield	Lassen	16
Little Dixie Wash	Kem	14
Little Grass Valley Reservoir	Plumas	16
Little Kern River	Tulare	16
Little Lake	Inyo	16
Little Panoche	Fresno	13
Little River	Humboklt	1

City	County	CZ
Little River	Mendocino	1
Little Rock Wash	Los Angeles	4
Little Shasta	Siskiyou	16
Little Shasta River	Siskiyou	16
Little Truckee River	Sierra	16
Little Valley	Lassen	16
Little Walker River	Mono	16
Littlerock	Los Angeles	14
Live Oak	Santa Cruz	3
Live Oak	Sutter	11
Live Oak Springs	San Diego	14
Livermore	Alameda	12
Livingston	Merced	12
Llanada	San Benito	4
Llano	Los Angeles	14
Lockeford	San Joaquin	12
Lockhart	San Bernardino	14
Lockwood	Monterey	4
Loco	Inyo	16
Lodgepole	Lassen	16
Lodi	San Joaquin	12
Lodoga	Colusa	11
Loert Otay Reservoir	San Diego	10
Logandale	Glenn	11
Loleta	Humboklt	1
Loma Linda	San Bernardino	10
Loma Mar	San Mateo	3
Loma Prieta	Santa Clara	4
Loma Rica	Yuba	11
Lomita	Los Angeles	6
Lomo	Butte	16
Lomo	Sutter	11
Lompoc	Santa Barbara	5
Lone Pine	Inyo	16
Lone Tree Canyon	Kem	16
Long Barn	Tuolumne	16
Long Beach	Los Angeles	6/8
Longvale	Mendocino	2
Lonoak	Monterey	4
Lookout	Modoc	16
Lookout Junction	Modoc	16
Loomis	Placer	11
Loon Lake Reservoir	El Dorado	16
Lopez Lake	San Luis Obispo	5
Loraine	Kem	16
Los Alamitos	Orange	8
Los Alamos	Santa Barbara	5
Los Altos	Santa Clara	4
Los Altos Hills	Santa Clara	4
Los Angeles	Los Angeles	8/9
Los Banos	Merced	12
Los Banos Reservoir	Merced	12
Los Berros Canyon	San Luis Obispo	5
Los Gatos	Santa Clara	4
Los Molinoss	Tehama	11
Los Nietos	Los Angeles	9
Los Olivos	Santa Barbara	5
Los Osos	San Luis Obispo	5
Los Serranos	San Bernardino	10
Lost Hills	Kem	13
Lost River	Modoc	16
Lostman Spring	Inyo	16
Lotus	El Dorado	12
Lower Bear River Reservoir	San Diego	16
Lower Klamath Lake	Siskiyou	16
Lower Lake	Lake	2
Lower Lake	Modoc	16
Lowrey	Tehama	11
Loyalton	Sierra	16
Lucas Vly-Marinwood	Sonoma	2
Lucerne	Lake	2
Lucerne Lake	San Bernardino	14
Lucerne Valley	San Bernardino	14
Lucia	Monterey	3
Ludlow	San Bernardino	14
Lynwood	Los Angeles	8
Lyonsville	Tehama	16
Lytle Creek	San Bernardino	16
Lytton	Sonoma	2
M		
Macdoel	Siskiyou	16
Madeline	Lassen	16
Madeline Plains	Lassen	16
Madera	Madera	13
Madera Acres	Madera	13
Madera Canal	Madera	13
Madison	Yolo	12
Magalia	Butte	11
Mail Ridge	Humboklt	2
Malaga	Fresno	13
Malibu	Los Angeles	6
Mammoth	Modoc	16
Mammoth Lakes	Mono	16
Mammoth Pool Reservoir	Fresno	16
Mammoth Pool Reservoir	Madera	16
Mammoth Wash	Imperial	15
Manchester	Mendocino	1
Manhattan Beach	Los Angeles	6
Manix	San Bernardino	14
Manley Peak	Inyo	16
Manteca	San Joaquin	12
Manton	Tehama	16
Manzanita Lake	Shasta	16
Maple Creek	Humboklt	1
Marble Canyon	Inyo	16
March A.F.B.	Riverside	10
Mare Island Naval Facility	Solano	3
Margarita Peak	San Diego	10
Maricopa	Kem	13
Marin City	Marin	3

City	County	CZ
Marina	Monterey	3
Marina del Rey	Los Angeles	9
Mariposa	Mariposa	12
Markleeville	Alpine	16
Markley Cove	Napa	2
Marshall	Marin	3
Martell	Amador	12
Martinez	Contra Costa	12
Martinez Canyon	Riverside	15
Marysville	Yuba	11
Mason Station	Lassen	16
Massack	Plumas	16
Mather	Tuolumne	16
Mather Air Force Base	Sacramento	12
Matheson	Shasta	11
Matterhorn Peak	Mono	16
Matterhorn Peak	Tuolumne	16
Mattole River	Humboklt	1
Mattole River (North Fork)	Humboklt	1
Mattole River (South Fork)	Humboklt	1
Maxwell	Colusa	11
May	Siskiyou	16
Mayacmas Mountains	Lake	2
Maywood	Los Angeles	8
McArthur	Modoc	16
McArthur	Shasta	16
McCann	Humboklt	2
McClellan Air Force Base	Sacramento	12
McCloud	Siskiyou	16
McCloud River	Shasta	16
McCoy Wash	Riverside	15
McDonald Peak	Lassen	16
McFarland	Kem	13
McGee Canyon	Mono	16
McKinleyville	Humboklt	1
McKittrick	Kem	13
McMillan Canyon	San Luis Obispo	4
Meadow Lakes	Fresno	16
Meadow Valley	Plumas	16
Meadow Vista	Placer	11
Meares	Modoc	16
Mecca	Riverside	15
Meeks Bay	El Dorado	16
Meiners Oaks	Ventura	9
Meiss Lake	Siskiyou	16
Melones Reservoir	Calaveras	12
Melones Reservoir	Tuolumne	12
Mendocino	Mendocino	1
Mendota	Fresno	13
Menlo Park	San Mateo	3
Mentone	San Bernardino	10
Merced	Merced	12
Merced Falls	Merced	12
Merced River	Merced	12
Merced River (South Fork)	Mariposa	16
Meridian	Sutter	11

City	County	CZ
Merle Collins Reservoir	Yuba	11
Mesa Grande	San Diego	14
Mesaville	Riverside	15
Mesquite Lake	San Bernardino	14
Mettler	Kem	13
Metz	Monterey	4
Meyers	El Dorado	16
Michigan Bluff	Placer	16
Middle Alkali Lake	Modoc	16
Middle River	San Joaquin	12
Middle River Town	San Joaquin	12
Middle Tuolumne River	Tuolumne	16
Middle Yuba River	Nevada	16
Middle Yuba River	Yuba	16
Middletown	Lake	2
Midland	Riverside	15
Midpines	Mariposa	16
Midway	Alameda	12
Midway	San Bernardino	14
Midway Well	Inyo	14
Midwell Well	Imperial	14
Milford	Lassen	16
Mill Creek	Tehama	16
Mill Valley	Marin	3
Millbrae	San Mateo	3
Miller Spring	Inyo	14
Millerton Lake	Fresno	13
Millerton Lake	Madera	13
Milligan	San Bernardino	15
Millville	Shasta	11
Milo	Tulare	13
Milpitas	Santa Clara	4
Milton	Calaveras	12
Mina	Mendocino	2
Mineral	Tehama	16
Mineral King	Tulare	16
Minneola	San Bernardino	14
Mira Canyon	Los Angeles	9
Mira Loma	Riverside	10
Miracle Hot Springs	Kem	16
Miramar	San Mateo	3
Miramar Naval Air Station	San Diego	7
Miramonte	Fresno	13
Miranda	Humboklt	2
Mission Bay	San Diego	7
Mission Viejo	Orange	8
Mitchell Caverns	San Bernardino	14
Mi-Wuk Village	Tuolumne	12
Moccasin	Plumas	16
Moccasin	Tuolumne	12
Modesto	Stanislaus	12
Modesto Reservoir	Stanislaus	12
Modjeska	Orange	8
Moffett Field Naval Air Station	Santa Clara	4
Mojave	Kem	14
Mojave River	San Bernardino	14

City	County	CZ
Mojave River Forks Reservoir	San Bernardino	14
Mokelumne Hill	Calaveras	12
Mokelumne River	San Joaquin	12
Monmouth	Fresno	13
Mono Hot Springs	Fresno	16
Mono Lake	Mono	16
Monolith	Kem	16
Monrovia	Los Angeles	9
Monson	Tulare	13
Monta Vista	Santa Clara	4
Montague	Siskiyou	16
Montalvo	Ventura	6
Montara	San Mateo	3
Montclair	San Bernardino	10
Monte Nido	Los Angeles	6
Monte Rio	Sonoma	2
Monte Sereno	Santa Clara	4
Montebello	Los Angeles	9
Montecito	Santa Barbara	6
Monterey	Monterey	3
Monterey Bay	Monterey	3
Monterey Bay	Santa Cruz	3
Monterey Park	Los Angeles	9
Montezuma	Solano	12
Montezuma Slough	Solano	12
Montgomery Creek	Shasta	16
Monticello Dam	Solano	2
Montpelier	Stanislaus	12
Montrose	Los Angeles	9
Monument Peak	San Diego	14
Moon Lake	Lassen	16
Moorpark	Ventura	9
Morada	San Joaquin	12
Moraga	Contra Costa	12
Morales Canyon	San Luis Obispo	4
Morena VIllage	San Diego	14
Moreno Valley	Riverside	10
Morgan Hill	Santa Clara	4
Mormon Bar	Mariposa	12
Mormon Slough	San Joaquin	12
Morongo Valley	San Bernardino	14
Morrison Slough	Sutter	11
Morro Bay	San Luis Obispo	5
Moss Beach	San Mateo	3
Moss Landing	Monterey	3
Mount Baldy	San Bernardino	16
Mount Bullion	Mariposa	12
Mount Carmel	Monterey	4
Mount Center	Riverside	16
Mount Darwin	Fresno	16
Mount Darwin	Inyo	16
Mount Diablo	Contra Costa	12
Mount Eddy	Siskiyou	16
Mount Eddy	Trinity	16
Mount Eden	Alameda	3
Mount Hamilton	Santa Clara	4

City	County	CZ
Mount Hebron	Siskiyou	16
Mount Hermon	Santa Clara	3
Mount Hoffman	Siskiyou	16
Mount Konocti	Lake	2
Mount Laguna	San Diego	14
Mount Lassic	Humboklt	2
Mount Lyell	Madera	16
Mount Lyell	Mono	16
Mount Morgan	Inyo	16
Mount Patterson	Mono	16
Mount Pinchot	Fresno	16
Mount Pinos	Ventura	16
Mount Saint Helena	Napa	2
Mount Saint Helena	Sonoma	2
Mount San Antonio	Los Angeles	16
Mount San Antonio	San Bernardino	16
Mount San Jacinto	Riverside	16
Mount Shasta	Siskiyou	16
Mount Signal	Imperial	15
Mount Vida	Modoc	16
Mount Whitney	Inyo	16
Mount Whitney	Tulare	16
Mount Wilson	Los Angeles	16
Mountain Gate	Shasta	11
Mountain Meadows Reservoir	Lassen	16
Mountain Pass	San Bernardino	14
Mountain Ranch	Calaveras	12
Mountain Spring	Imperial	15
Mountain View	Santa Clara	4
Mugginsville	Siskiyou	16
Murphys	Calaveras	12
Murrieta	Riverside	10
Muscoy	San Bernardino	10
Myers Flat	Humboklt	2
N		
Nacimiento Reservoir	San Luis Obispo	4
Nacimiento River	San Luis Obispo	4
Napa	Napa	2
Napa Junction	Napa	2
Naples	Santa Barbara	6
Nashmead	Mendocino	2
National City	San Diego	7
Navarro	Mendocino	2
Navelencia	Fresno	13
Needles	San Bernardino	15
Nelson	Butte	11
Neuralia	Kem	14
Nevada City	Nevada	11
New Almaden	Santa Clara	4
New Auberry	Fresno	13
New Bullards Bar Reservoir	Yuba	16
New Cuyama	Santa Barbara	4
New Don Pedro Reservoir	Tuolumne	12
New Exchequer Dam	Mariposa	12

City	County	CZ
New Hogan Reservoir	Calaveras	12
New London	Tulare	13
New River	Trinity	16
Newark	Alameda	3
Newberry Springs	San Bernardino	14
Newbury Park	Ventura	9
Newcastle	Placer	11
Newell	Modoc	16
Newhall	Los Angeles	9
Newman	Stanislaus	12
Newport Bay	Orange	6
Newport Beach	Orange	6
Newville	Glenn	11
Nicasio	Marin	2
Nice	Lake	2
Nicholls Warm Springs	Riverside	15
Nicolaus	Sutter	11
Nightingale	Riverside	16
Niland	Imperial	15
Nimbus	Sacramento	12
Nipomo	San Luis Obispo	5
Nipton	San Bernardino	14
Nopah Range	Inyo	14
Norco	Riverside	10
Nord	Butte	11
Norden	Nevada	16
North Auburn	Placer	11
North Bloomfield	Nevada	16
North Columbia	Nevada	11
North Edwards	Kem	14
North Fork	Madera	16
North Highlands	Sacramento	12
North Hollywood	Los Angeles	9
North Palm Springs	Riverside	15
North Sacramento	Sacramento	12
North San Juan	Nevada	11
North Yolla Bolly Mountains	Tehama	16
North Yuba River	Yuba	16
Northridge	Los Angeles	9
Northspur	Mendocino	2
Norton AFB	San Bernardino	10
Norvell	Lassen	16
Norwalk	Los Angeles	8
Notleys Landing	Monterey	3
Novato	Marin	2
Nubieber	Lassen	16
Nuevo	Riverside	10
O		
Oak Grove	San Diego	14
Oak Ridge	Ventura	9
Oak Run	Shasta	11
Oak View	Ventura	9
Oakdale	Stanislaus	12
Oakhurst	Madera	13
Oakland AP	Alameda	3
Oakley	Contra Costa	12
Oakville	Napa	2
Oasis	Mono	16
Oasis	Riverside	15
Obie	Shasta	16
O'Brien	Shasta	16
Observation Peak	Lassen	16
Occidental	Sonoma	2
Ocean Beach	San Diego	7
Ocean View	Sonoma	1
Oceano	San Luis Obispo	5
Oceanside	San Diego	7
Ocotillo	Imperial	15
Ocotillo Wells	San Diego	15
Ogilby	Imperial	15
Oildale	Kem	13
Oilfields	Fresno	13
Ojai	Ventura	9
Olancha	Inyo	16
Olancha Peak	Inyo	16
Olancha Peak	Tulare	16
Old Dale	San Bernardino	14
Old River	Contra Costa	12
Old River	Kem	13
Old River	San Joaquin	12
Old Station	Shasta	16
Olema	Marin	3
Olinda	Shasta	11
Olivehurst	Yuba	11
Omo Ranch	El Dorado	16
O'Neals	Madera	13
O'Neill Forebay	Merced	12
Ono	Shasta	11
Ontario	San Bernardino	10
Onyx	Kem	16
Opal Cliffs	Santa Cruz	3
Orange	Orange	8
Orange Cove	Fresno	13
Orangevale	Sacramento	12
Orchard Peak	Kem	13
Orcutt	Santa Barbara	5
Ord Mountain	San Bernardino	14
Ordbend	Glenn	11
Oregon House	Yuba	11
Oregon Peak	Yuba	16
Orestimba Peak	Stanislaus	12
Orick	Humboklt	1
Orinda	Contra Costa	12
Orita	Imperial	15
Orland	Glenn	11
Orleans	Humboklt	2
Oro Fino	Siskiyou	16
Oro Grande	San Bernardino	14
Oro Grande Wash	San Bernardino	14
Oro Loma	Fresno	13

City	County	CZ
Orosi	Tulare	13
Oroville	Butte	11
Oroville East	Butte	11
Otay	San Diego	7
Outingdale	El Dorado	12
Owens Lake	Inyo	16
Owens River	Inyo	16
Owens Valley	Inyo	16
Owenyo	Inyo	16
Owlshead Mountains	Inyo	14
Owlshead Mountains	San Bernardino	14
Oxalis	Fresno	13
Oxford	Solano	12
Oxnard	Ventura	6
Oxnard Beach	Ventura	6
P		
Pacheco	Contra Costa	12
Pacheco Pass	Santa Clara	4
Pacific	El Dorado	16
Pacific Beach	San Diego	7
Pacific Grove	Monterey	3
Pacific Palisades	Los Angeles	6
Pacifica	San Mateo	3
Pacoima	Los Angeles	16
Pacoima Canyon	Los Angeles	16
Pahrump Valley	Inyo	14
Paicines	San Benito	4
Paiute Canyon	Inyo	16
Pala	San Diego	10
Palen Lake	Riverside	15
Palen Mountains	Riverside	15
Palermo	Butte	11
Palm Canyon	Riverside	15
Palm City	San Diego	7
Palm Desert	Riverside	15
Palm Desert Country	Riverside	15
Palm Springs	Riverside	15
Palm Wash	Imperial	15
Palm Wells	San Bernardino	14
Palmdale AP	Los Angeles	14
Palo Alto	Santa Clara	4
Palo Cedro	Shasta	11
Palo Verde	Imperial	15
Palo Verde Valley	Riverside	15
Paloma	Calaveras	12
Palomar Mountain	San Diego	14
Palos Verdes Estates	Los Angeles	6
Panamint	Inyo	16
Panamint Range	Inyo	16
Panamint Springs	Inyo	14
Panamint Valley	Inyo	14
Panoche	San Benito	4
Panorama City	Los Angeles	9
Paradise	Butte	11

City	County	CZ
Paraiso Springs	Monterey	4
Paramount	Los Angeles	8
Pardee Reservoir	Amador	12
Pardee Reservoir	Calaveras	12
Parker Dam	San Bernardino	15
Parkfield	Monterey	4
Parkway-South Sacramento	Sacramento	12
Parlier	Fresno	13
Pasadena	Los Angeles	9
Paskenta	Tehama	11
Paso Robles AP	San Luis Obispo	4
Patrick Creek	Del Norte	16
Patricks Point	Humboklt	1
Patterson	Stanislaus	12
Paulsell	Stanislaus	12
Pauma Valley	San Diego	10
Paxton	Plumas	16
Paynes Creek	Tehama	11
Peanut	Trinity	16
Pearblossom	Los Angeles	14
Pearland	Los Angeles	14
Pebble Beach	Monterey	3
Pedley	Riverside	10
Pendleton M.C.B.	San Diego	7
Penn Valley	Nevada	11
Penngrove	Sonoma	2
Pennington	Sutter	11
Penryn	Placer	11
Pentz	Butte	11
Pepperwood	Humboklt	1
Perez	Modoc	16
Perris	Riverside	10
Pescadero	San Mateo	3
Petaluma	Sonoma	2
Petaluma River	Marin	2
Petaluma River	Sonoma	2
Peters	San Joaquin	12
Petrolia	Humboklt	1
Phelan	San Bernardino	14
Phillipsville	Humboklt	2
Philo	Mendocino	2
Picacho	Imperial	15
Picacho Wash	Imperial	15
Pico Rivera	Los Angeles	9
Piedmont	Alameda	3
Piedra PO	Fresno	13
Pierce	Siskiyou	16
Piercy	Mendocino	2
Pieta	Mendocino	2
Pigeon Point	San Mateo	3
Pillar Point	San Mateo	3
Pilot Hill	El Dorado	12
Pilot Peak	Mariposa	16
Pilot Peak	Nevada	11
Pilot Peak	Plumas	16
Pilot Peak	Tuolumne	16

City	County	CZ
Pine Canyon	Fresno	13
Pine Canyon	Monterey	4
Pine Canyon	San Luis Obispo	4
Pine Canyon	Santa Barbara	5
Pine Flat	Tulare	16
Pine Grove	Amador	12
Pine Mountain	San Luis Obispo	4
Pine Mountain	Ventura	16
Pine Ridge	Fresno	16
Pine Valley	San Diego	14
Pinecrest	Tuolumne	16
Pinedale	Fresno	13
Pinehurst	Fresno	16
Pinkham Wash	Riverside	15
Pinnacles NM	San Bernardino	14
Pinole	Contra Costa	3
Pinon Hills	San Bernardino	14
Pinto Mountains	Riverside	14
Pinto Wash	Imperial	15
Pinto Wash	Riverside	14
Pioneer	Amador	16
Pioneer Point	San Bernardino	14
Pioneertown	San Bernardino	14
Pipes Wash	San Bernardino	14
Piru	Ventura	9
Pismo Beach	San Luis Obispo	5
Pit River (North Fork)	Modoc	16
Pit River (South Fork)	Modoc	16
Pit River (town)	Lassen	16
Pittsburg	Contra Costa	12
Pittville	Shasta	16
Piute Valley	San Bernardino	14
Piute Wash	San Bernardino	14
Pixley	Tulare	13
Placentia	Orange	8
Placerville	El Dorado	12
Plainsburg	Merced	12
Plainview	Tulare	13
Planada	Merced	12
Plantation	Sonoma	1
Plasse	Amador	16
Plaster City	Imperial	15
Platina	Shasta	11
Pleasant Grove	Inyo	16
Pleasant Hill	Contra Costa	12
Pleasant Hill	Sutter	11
Pleasanton	Alameda	12
Plumas	Lassen	16
Plymouth	Amador	12
Point Arena	Mendocino	1
Point Arguello	Santa Barbara	5
Point Bonita	Marin	3
Point Buchon	San Luis Obispo	5
Point Conception	Santa Barbara	6
Point Delgada	Humboklt	1
Point Dume	Los Angeles	6
Point Fermin	Los Angeles	6
Point La Jolla	San Diego	7
Point Lobos	Monterey	3
Point Loma	San Diego	7
Point Mugu	Ventura	6
Point Mugu Naval Missile Center	Ventura	6
Point Piedras Blancas	San Luis Obispo	5
Point Pleasant	Sacramento	12
Point Reyes	Marin	3
Point Reyes Station	Marin	3
Point Saint George	Del Norte	1
Point Sal	Santa Barbara	5
Point Sur	Monterey	3
Pollock Pines	El Dorado	16
Pomona	Los Angeles	9
Pond	Kem	13
Pondosa	Siskiyou	16
Pope Valley	Napa	2
Poplar	Tulare	13
Porcupine Wash	Riverside	14
Port Chicago	Contra Costa	12
Port Hueneme	Ventura	6
Porterville	Tulare	13
Portola	Plumas	16
Portola Valley	San Mateo	3
Posey	Tulare	13
Posts	Monterey	3
Potrero	San Diego	14
Potter Valley	Mendocino	2
Poway Valley	San Diego	10
Powell Canyon	Monterey	4
Pozo	San Luis Obispo	4
Prado Flood Control Basin	Riverside	10
Prado Flood Control Basin	San Bernardino	10
Prather	Fresno	13
Presidio of San Francisco	San Francisco	3
Preston Peak	Siskiyou	16
Priest Valley	Monterey	4
Princeton	Colusa	11
Proberta	Tehama	11
Project City	Shasta	11
Providence Mountains	San Bernardino	14
Prunedale	Monterey	3
Pulga	Butte	16
Purdy	Sierra	16
Purisma Hills	Santa Barbara	5
Putah South Canal	Solano	12
Pyramid Lake	Los Angeles	16
Q		
Quail Valley	Riverside	10
Quartz Hill	Los Angeles	14
Quartz Peak	Imperial	15
Quatal Canyon	Ventura	16
Quedow Mountain	Tulare	13

City	County	CZ
Quincy	Plumas	16
R		
Racherby	Yuba	11
Rag Gulch	Kem	13
Rail Road Flat	Calaveras	12
Railroad Canyon Reservoir	Riverside	10
Rainbow	San Diego	10
Raisin City	Fresno	13
Raker & Thomas Reservoir	Modoc	16
Ramona	San Diego	10
Ranch	Mendocino	1
Ranchita	San Diego	14
Rancho Bernardo	San Diego	10
Rancho Cordova	Sacramento	12
Rancho Cucamonga	San Bernardino	10
Rancho Mirage	Riverside	15
Rancho Palos Verdes	Los Angeles	6
Rancho San Diego	San Diego	10
Rancho Santa Fe	San Diego	7
Rancho Santa Margarita	Orange	8
Randsburg	Kem	14
Ravendale	Lassen	16
Raymond	Madera	13
Red Bank	Tehama	11
Red Bluff	Tehama	11
Red Mountain	Del Norte	16
Red Mountain	San Bernardino	14
Red Top	Madera	13
Red Wall Canyon	Inyo	16
Redcrest	Humboklt	1
Redding	Shasta	11
Redlands	San Bernardino	10
Redman	Los Angeles	14
Redondo Beach	Los Angeles	6
Redway	Humboklt	2
Redwood City	San Mateo	3
Redwood Estates	Santa Clara	4
Redwood Valley	Mendocino	2
Reedley	Fresno	13
Reliz Canyon	Monterey	4
Renegade Canyon	Inyo	16
Requa	Del Norte	1
Rescue	El Dorado	12
Reseda	Los Angeles	9
Reynolds	Mendocino	2
Rhodes Wash	Inyo	14
Rialto	San Bernardino	10
Rice	San Bernardino	15
Rice Valley	Riverside	15
Richardson Grove	Humboklt	2
Richardson Springs	Butte	11
Richfield	Tehama	11
Richgrove	Tulare	13
Richmond	Contra Costa	3

City	County	CZ
Richvale	Butte	11
Ridge	Mendocino	2
Ridgecrest	Kem	14
Riggs Wash	San Bernardino	14
Rio Del Mar	Santa Cruz	3
Rio Dell	Humboklt	1
Rio Linda	Sacramento	12
Rio Nido	Sonoma	2
Rio Oso	Sutter	11
Rio Vista	Solano	12
Ripley	Riverside	15
Ripon	San Joaquin	12
Ripperdan	Madera	13
River Pines	Amador	12
River Springs Lakes	Mono	16
Riverbank	Stanislaus	12
Riverbank Army Depot	Stanislaus	12
Riverdale	Fresno	13
Riverside	Riverside	10
Roaring River	Fresno	16
Robbins	Sutter	11
Robla	Sacramento	12
Rocklin	Placer	11
Rockport	Mendocino	1
Rockville	Solano	12
Rodeo	Contra Costa	3
Rogers Lake	Kem	14
Rohnert Park	Sonoma	2
Rohnerville	Humboklt	1
Rolinda	Fresno	13
Rolling Hills	Los Angeles	6
Rolling Hills Estates	Los Angeles	6
Romoland	Riverside	10
Rosamond	Kem	14
Rosamond Lake	Kem	14
Rosamond Lake	Los Angeles	14
Roseland	Sonoma	2
Rosemead	Los Angeles	9
Rosemont	Sacramento	12
Roseville	Placer	11
Rosewood	Tehama	11
Ross	Marin	2
Rossmoor	Orange	8
Rough and Ready	Nevada	11
Round Mountain	Shasta	16
Rovana	Inyo	16
Rowland Heights	Los Angeles	9
Rubicon River	El Dorado	16
Rubicon River	Placer	16
Rubidoux	Riverside	10
Rumsey	Yolo	12
Running Springs	San Bernardino	16
Russian Peak	Siskiyou	16
Ruth	Trinity	16
Rutherford	Napa	2
Ryan	Inyo	14

City	County	CZ
Ryde	Sacramento	12
S		
Sacramento AP	Sacramento	12
Sacramento Army Depot	Sacramento	12
Saddle Mountain	El Dorado	16
Sage	Riverside	10
Sage Hen	Lassen	16
Saint Bernard	Tehama	16
Saint Helena	Napa	2
Saint Johns River	Tulare	13
Saint Mary's College	Contra Costa	12
Salida	Stanislaus	12
Salinas	Monterey	3
Saline Valley	Inyo	16
Salmon Mountain	Humboklt	16
Salmon Mountain	Siskiyou	16
Salmon River	Siskiyou	16
Salmon River (East Fork)	Siskiyou	16
Salmon River (North Fork)	Siskiyou	16
Salmon River (South Fork)	Siskiyou	16
Salt Lake	Inyo	16
Salt River	Humboklt	1
Salt Springs Reservoir	Amador	16
Salt Springs Reservoir	Calaveras	16
Salt Springs Valley Reservoir	Calaveras	12
Saltdale	Kem	14
Saltmarsh	San Bernardino	15
Salton City	Imperial	15
Salton Sea	Imperial	15
Salton Sea	Riverside	15
Saltus	San Bernardino	15
Salyer	Trinity	16
Samoa	Humboklt	1
San Andreas	Calaveras	12
San Andreas Lake	San Mateo	3
San Anselmo	Marin	2
San Antonio Canyon	Los Angeles	16
San Antonio Mission	Monterey	4
San Antonio Reservoir	Alameda	12
San Antonio Reservoir	Monterey	4
San Antonio River	Monterey	4
San Antonio River (North Fork)	Monterey	4
San Ardo	Monterey	4
San Benito	San Benito	4
San Benito Mountain	San Benito	4
San Benito River	San Benito	4
San Bernardino	San Bernardino	10
San Bernardino Mountains	San Bernardino	16
San Bruno	San Mateo	3
San Buenaventura	Ventura	6
San Carlos	San Mateo	3
San Clemente	Orange	6
San Clemente Island	Los Angeles	6
San Diego	San Diego	7/10
San Diego Bay	San Diego	7
San Diego Naval Hospital	San Diego	7
San Diego Naval Station	San Diego	7
San Dimas	Los Angeles	9
San Felipe	San Diego	14
San Felipe	Santa Clara	4
San Fernando	Los Angeles	9
San Fernando Valley	Los Angeles	9
San Francisco	San Francisco	3
San Francisco Bay	San Francisco	3
San Gabriel	Los Angeles	9
San Gabriel Mountains	Los Angeles	16
San Gabriel River (West Fork)	Los Angeles	16
San Gorgonio Mountain	San Bernardino	16
San Gorgonio Pass	Riverside	15
San Gorgonio River	Riverside	15
San Gregorio	San Mateo	3
San Jacinto	Riverside	10
San Jacinto Mountains	Riverside	15
San Jacinto River	Riverside	10
San Joaquin	Fresno	13
San Joaquin River (East Fork)	Madera	16
San Joaquin River (Middle Fork)	Madera	16
San Joaquin River (North Fork)	Madera	16
San Joaquin River (South Fork)	Madera	16
San Joaquin River (West Fork)	Madera	16
San Jose	Santa Clara	4
San Juan Bautista	San Benito	4
San Juan Capistrano	Orange	6
San Leandro	Alameda	3
San Lorenzo	Alameda	3
San Lorenzo River	Santa Cruz	3
San Lucas	Monterey	4
San Luis Holding Reservoir	Merced	12
San Luis Obispo	San Luis Obispo	5
San Luis Obispo Bay	San Luis Obispo	5
San Luis Rey	San Diego	7
San Luis Rey River (West Fork)	San Diego	14
San Marcos	San Diego	10
San Marino	Los Angeles	9
San Martin	Santa Clara	4
San Mateo	San Mateo	3
San Mateo Canyon	San Diego	10
San Miguel	San Luis Obispo	4
San Miguel Island	Santa Barbara	6
San Nicholas Island	Ventura	6
San Onofre	San Diego	7
San Onofre Canyon	San Diego	10
San Pablo	Contra Costa	3
San Pasqual	San Diego	10
San Pedro	Los Angeles	6
San Pedro Bay	Los Angeles	6
San Quentin	Marin	2
San Rafael	Marin	2
San Rafael Mountain	Santa Barbara	5
San Ramon	Contra Costa	12

City	County	CZ
San Simeon	San Luis Obispo	5
San Timoteo Canyon	Riverside	10
San Vicente Reservoir	San Diego	10
San Ysidro	San Diego	7
San Ysidro Mountains	San Diego	10
Sand City	Monterey	3
Sand Hills	Imperial	15
Sandberg	Los Angeles	16
Sandia	Imperial	15
Sands	San Bernardino	14
Sanel Mountain	Mendocino	2
Sanger	Fresno	13
Sanitarium	Napa	2
Santa Ana	Orange	8
Santa Barbara	Santa Barbara	6
Santa Barbara Island	Santa Barbara	6
Santa Catalina Island	Los Angeles	6
Santa Clara	Santa Clara	4
Santa Clara River	Ventura	6/9
Santa Clara Valley	Santa Clara	4
Santa Clarita	Los Angeles	9
Santa Cruz	Santa Cruz	3
Santa Cruz Island	Santa Barbara	6
Santa Cruz Mountains	Santa Cruz	3
Santa Fe Springs	Los Angeles	9
Santa Margarita	San Luis Obispo	4
Santa Margarita Lake	San Luis Obispo	4
Santa Maria	Santa Barbara	5
Santa Maria River	San Luis Obispo	5
Santa Maria River	Santa Barbara	5
Santa Maria Valley	Santa Barbara	5
Santa Monica	Los Angeles	6
Santa Monica Bay	Los Angeles	6
Santa Monica Mountains	Los Angeles	6
Santa Paula	Ventura	9
Santa Rita Park	Merced	12
Santa Rosa	Sonoma	2
Santa Rosa Islands	Santa Barbara	6
Santa Rosa Mountains	Riverside	15
Santa Susana	Ventura	9
Santa Venetia	Marin	2
Santa Ynez	Santa Barbara	5
Santa Ynez Mountains	Santa Barbara	5
Santa Ynez River	Santa Barbara	5
Santa Ysabel	San Diego	14
Santee	San Diego	10
Santiago Reservoir	Orange	8
Saratoga	Santa Clara	4
Sardine Peak	Sierra	16
Sargent	Santa Clara	4
Sargent Canyon	Monterey	4
Saticoy	Ventura	6
Sattley	Sierra	16
Saugus	Los Angeles	6
Sausalito	Marin	3
Sawtooth Peak	Inyo	16

City	County	CZ
Sawyers Bar	Siskiyou	16
Scarface	Modoc	16
Scheelite	Inyo	16
Schellville	Sonoma	2
Scotia	Humboklt	1
Scott Bar	Siskiyou	16
Scott Bar Mountains	Siskiyou	16
Scott Mountains	Trinity	16
Scott River	Siskiyou	16
Scott River (East Fork)	Siskiyou	16
Scotts	Lassen	16
Scotts Valley	Santa Cruz	3
Scottys Castle	Inyo	16
Sea Cliff	Ventura	6
Seal Beach	Orange	6
Searles	Kem	14
Searles Lake	San Bernardino	14
Seaside	Monterey	3
Sebastopol	Sonoma	2
Seeley	Imperial	15
Seiad Valley	Siskiyou	16
Selma	Fresno	13
Senator Wash	Imperial	15
Seneca	Plumas	16
Sepulveda	Los Angeles	9
Sepulveda Dam	Los Angeles	9
Sequoia	Humboklt	2
Sespe	Ventura	9
Seven Oaks	San Bernardino	16
Shadow Valley	San Bernardino	14
Shafter	Kem	13
Shandon	San Luis Obispo	4
Sharpe Army Depot	San Joaquin	12
Shasta	Shasta	11
Shasta Bally	Shasta	11
Shasta Lake	Shasta	16
Shasta River	Siskiyou	16
Shasta Springs	Siskiyou	16
Shasta Valley	Siskiyou	16
Shaver Lake	Fresno	16
Shedd Canyon	San Luis Obispo	4
Sheep Canyon	Inyo	14
Sheep Mountain	Siskiyou	16
Sheep Ranch	Calaveras	12
Sheldon	Sacramento	12
Shelter Cove	Humboklt	1
Sheridan	Placer	11
Sherman Oaks	Los Angeles	9
Sherman Peak	Tulare	16
Shingle Springs	El Dorado	12
Shingletown	Shasta	16
Shively	Humboklt	1
Shoshone	Inyo	14
Sidewinder Mountain	San Bernardino	14
Sierra Army Depot	Lassen	16
Sierra Buttes	Sierra	16

City	County	CZ
Sierra City	Sierra	16
Sierra Madre	Los Angeles	9
Sierra Nevada	Madera	16
Sierra Valley	Plumas	16
Sierra Valley	Sierra	16
Sierraville	Sierra	16
Signal Hill	Los Angeles	6
Silver City	Tulare	16
Silver Creek	Fresno	13
Silver Lake	Amador	16
Silver Lake	San Bernardino	14
Silverado	Orange	8
Silverwood Lake	San Bernardino	16
Simi Valley	Ventura	9
Simmler	San Luis Obispo	4
Siskiyou Mountains	Del Norte	16
Siskiyou Mountains	Siskiyou	16
Sisquoc	Santa Barbara	5
Sisquoc River	Santa Barbara	5
Sites	Colusa	11
Skaggs Springs	Sonoma	2
Skedaddle Mountains	Lassen	16
Skidoo	Inyo	16
Slate Range	Inyo	14
Slate Range	San Bernardino	14
Sleepy Valley	Los Angeles	9
Sloat	Plumas	16
Sloughhouse	Sacramento	12
Smartville	Yuba	11
Smith River	Del Norte	1
Smith River (Middle Fork)	Del Norte	16
Smith River (North Fork)	Del Norte	16
Smith River (South Fork)	Del Norte	16
Smithflat	El Dorado	12
Smoke Tree Wash	Riverside	14
Snake River	Sutter	11
Snelling	Merced	12
Snowden	Siskiyou	16
Soda Lake	San Bernardino	14
Soda Lake	San Luis Obispo	4
Soda Mountains	San Bernardino	14
Soda Springs	Nevada	16
Soda Springs	Sonoma	1
Solana Beach	San Diego	7
Soledad	Monterey	3
Solemint	Los Angeles	9
Solromar	Ventura	6
Solvang	Santa Barbara	5
Somerset	El Dorado	12
Somes Bar	Siskiyou	16
Somis	Ventura	6
Sonoma	Sonoma	2
Sonoma Mountain	Sonoma	2
Sonora	Tuolumne	12
Sonora Pass	Mono	16
Sonora Pass	Tuolumne	16

City	County	CZ
Soquel	Santa Cruz	3
Soulsbyville	Tuolumne	12
Sourdough Spring	Inyo	16
South Dos Palos	Merced	12
South El Monte	Los Angeles	9
South Entry Yosemite	Tuolumne	16
South Fork	Humboklt	1
South Gate	Los Angeles	8
South Laguna	Orange	6
South Lake Tahoe	El Dorado	16
South Oroville	Butte	11
South Pasadena	Los Angeles	9
South San Francisco	San Mateo	3
South San Gabriel	Los Angeles	9
South Turlock	Stanislaus	12
South Whittier	Los Angeles	9
South Yolla Bolly Mountains	Tehama	16
South Yuba City	Sutter	11
Spangler	San Bernardino	14
Spanish Mountain	Fresno	16
Spanish Spring	Inyo	16
Spence	Monterey	3
Spreckels	Monterey	3
Spring Garden	Plumas	16
Spring Valley	San Diego	10
Springville	Tulare	13
Spyrock	Mendocino	2
Squaw Valley	Fresno	13
Squaw Valley (Olympic Valley)	Placer	16
Squirrel Inn	San Bernardino	14
Stacy	Lassen	16
Stampede Reservoir	Sierra	16
Standard	Tuolumne	12
Standish	Lassen	16
Stanford	Santa Clara	4
Stanislaus	Calaveras	16
Stanislaus River (Middle Fork)	Tuolumne	16
Stanton	Orange	8
Stent	Tuolumne	12
Stevens	Kem	13
Stevinson	Merced	12
Stewarts Point	Sonoma	1
Stinson Beach	Marin	3
Stirling City	Butte	16
Stockton	San Joaquin	12
Stony Gorge Reservoir	Glenn	11
Stonyford	Colusa	11
Storrie	Plumas	16
Stovepipe Wells	Inyo	14
Stratford	Kings	13
Strathmore	Tulare	13
Strawberry	Tuolumne	16
Strawberry Valley	Yuba	16
Studio City	Los Angeles	9
Suisun Bay	Contra Costa	12
Suisun Bay	Solano	12

City	County	CZ
Suisun City	Solano	12
Sulphur Springs	Ventura	9
Sultana	Tulare	13
Summerland	Santa Barbara	6
Summit City	Shasta	11
Sun City	Riverside	10
Sun Valley	Los Angeles	9
Suncrest	San Diego	10
Sunland	Los Angeles	9
Sunnymead	Riverside	10
Sunnyvale	Santa Clara	4
Sunnyvale Air Force Station	Santa Clara	4
Sunol	Alameda	12
Sunset Beach	Orange	6
Superior Lake	San Bernardino	14
Superstition Mountain	Imperial	15
Surf	Santa Barbara	5
Surfside	Orange	6
Surprise Valley	Modoc	16
Susan River	Lassen	16
Susanville	Lassen	16
Sutter	Sutter	11
Sutter Buttes	Sutter	11
Sutter Bypass	Sutter	11
Sutter Creek	Amador	12
Svedal	Santa Clara	4
Swanton	Santa Cruz	3
Sweetwater Reservoir	San Diego	10
Sycamore	Colusa	11
Sylmar	Los Angeles	9
T		
Taft	Kem	13
Taft Heights	Kem	13
Tagus	Tulare	13
Tahoe City	Placer	16
Tahoe Pines	Placer	16
Tahoe Vista	Placer	16
Tahoma	Placer	16
Tajiguas	Santa Barbara	6
Talmage	Mendocino	2
Tamalpais-Homestead Valley	Marin	3
Tambo	Yuba	11
Tarzana	Los Angeles	6
Tassajara	Contra Costa	2
Tassajara Hot Springs	Monterey	4
Tatu	Mendocino	2
Taylor Canyon	San Luis Obispo	4
Taylor Peak	Humboklt	1
Taylorsville	Plumas	16
Teagle Wash	San Bernardino	14
Teakettle Junction	Inyo	16
Tecate	San Diego	14
Tecnor	Siskiyou	16
Tecopa	Inyo	14

City	County	CZ
Tehachapi	Kem	16
Tehachapi Mountains	Kem	16
Tehachapi Pass	Kem	16
Tehama	Tehama	11
Tejon Pass	Los Angeles	16
Tejon Rancho	Los Angeles	16
Telescope Peak	Inyo	16
Temecula	Riverside	10
Temescal Wash	Riverside	10
Temple City	Los Angeles	9
Templeton	San Luis Obispo	4
Tennant	Siskiyou	16
Tepusquet Canyon	Santa Barbara	5
Tequspuet Peak	Santa Barbara	5
Terminous	San Joaquin	12
Terminus Dam	Tulare	13
Termo	Lassen	16
Terra Bella	Tulare	13
Thermal	Riverside	15
Thermalito	Butte	11
Thermalito Afterbay	Butte	11
Thermalito Forebay	Butte	11
Thomas A. Edison Lake	Fresno	16
Thomas Mountain	Riverside	16
Thompson Canyon	Monterey	4
Thornton	San Joaquin	12
Thousand Oaks	Ventura	9
Thousand Palms	Riverside	15
Three Points	Los Angeles	14
Three Rivers	Tulare	13
Three Rocks	Fresno	13
Tiburon	Marin	3
Tiefort Mountains	San Bernardino	14
Tierra del Sol	San Diego	14
Tiger Creek Power House	Amador	12
Tiger Creek Power House	Butte	11
Tijuana River	San Diego	7
Tinemaha Reservoir	Inyo	16
Tioga Pass	Mono	16
Tioga Pass	Tuolumne	16
Tionesta	Modoc	16
Tipton	Tulare	13
Titus Canyon	Inyo	16
Tobias Peak	Tulare	16
Tollhouse	Fresno	13
Tomales	Marin	3
Tomales Bay	Marin	3
Toms Place	Mono	16
Topanga	Los Angeles	6
Topanga Beach	Los Angeles	6
Topanga Canyon	Los Angeles	6
Topaz	Mono	16
Topaz Lake	Mono	16
Torrance	Los Angeles	6
Trabuco Canyon	Orange	8
Tracy Carbona	San Joaquin	12

City	County	CZ
Tranquillity	Fresno	13
Traver	Tulare	13
Travis A. F.B.	Solano	12
Treasure Island Naval Station	San Francisco	3
Tremont	Solano	12
Tres Pinos	San Benito	4
Trigo	Madera	13
Trimmer	Fresno	16
Trinidad	Humboklt	1
Trinidad Head	Humboklt	1
Trinity Alps	Trinity	16
Trinity Center	Trinity	16
Trinity Dam	Trinity	16
Trinity Mountains	Shasta	16
Trinity Mountains	Trinity	16
Trinity River (East Fork)	Trinity	16
Trona	San Bernardino	14
Trowbridge	Sutter	11
Troy	Placer	16
Truckee	Nevada	16
Truckee River	Nevada	16
Tucker Canyon	San Luis Obispo	4
Tudor	Sutter	11
Tujunga	Los Angeles	9
Tulare	Tulare	13
Tulare Lake Bed	Kings	13
Tule Canal	Yolo	12
Tule Lake Sump	Siskiyou	16
Tule Mountain	Lassen	16
Tule River	Kings	13
Tule Wash	Imperial	15
Tulelake	Siskiyou	16
Tuolumne	Tuolumne	12
Tuolumne Meadows	Tuolumne	16
Tuolumne River (North Fork)	Tuolumne	16
Tuolumne River (South Fork)	Tuolumne	16
Tupman	Kem	13
Turk	Fresno	13
Turlock	Stanislaus	12
Turlock Lake	Stanislaus	12
Turner	San Joaquin	12
Turntable Creek	Plumas	16
Turntable Creek	Shasta	11
Turtle Mountains	San Bernardino	14
Tustin	Orange	8
Tustin Foothills	Orange	8
Tuttle	Merced	12
Tuttletown	Tuolumne	12
Twain	Plumas	16
Twain Harte	Tuolumne	12
Twentynine Palms	San Bernardino	14
Twin Bridges	El Dorado	16
Twin Cities	Sacramento	12
Twin Lakes	Mono	16
Twin Lakes	Santa Cruz	3
Twitchell Reservoir	Santa Barbara	5

City	County	CZ
Two Rock	Sonoma	2
U		
U.S. Navy Training Center	San Diego	7
U.S.M.C. Air Station, El Toro	Orange	8
U.S.M.C. Recruit Depot,	San Diego	7
U.S.N. Air Field, El Centro	Imperial	15
U.S.N. Air Station, Alameda	Alameda	3
U.S.N. Air Station, Imperial	San Diego	7
U.S.N. Air Station, Lemoore	Kings	13
U.S.N. Air Station, Los Alamitos	Orange	8
U.S.N. Air Station, North Island	San Diego	7
U.S.N. Communication Station	San Joaquin	12
U.S.N. Construction Battalion	Ventura	6
U.S.N. Facility, Point Sur	Monterey	3
U.S.N. Facility, San Bruno	San Mateo	3
U.S.N. Facility, San Clement Is.	Los Angeles	6
U.S.N. Facility, San Nicolas Is.	Ventura	6
U.S.N. Facility, Sunnyvale	Santa Clara	4
U.S.N. Facility, Vallejo	Solano	3
U.S.N. Reservation, Point Loma	San Diego	7
U.S.N. Shipyard, Long Beach	Los Angeles	6
U.S.N. Supply Center, Oakland	Alameda	3
U.S.N. Weapons Station, Conc.	Contra Costa	12
U.S.N. Weapons Station, Seal	Orange	6
UCLA	Los Angeles	9
Ukiah	Mendocino	2
Union City	Alameda	3
Union Valley Reservoir	El Dorado	16
Unnamed Wash	Imperial	15
Upland	San Bernardino	10
Upper Lake	Lake	2
Upper Lake	Modoc	16
Upper San Leandro Reservoir	Alameda	3
Usona	Mariposa	13
V		
Vacaville	Solano	12
Vade	El Dorado	16
Val Verde Park	Los Angeles	9
Valencia	Los Angeles	9
Valinda	Los Angeles	9
Valle Vista	Riverside	10
Vallecito	Calaveras	12
Vallejo	Solano	3
Valley Center	San Diego	10
Valley Ford	Sonoma	2
Valley Home	Stanislaus	12
Valley Springs	Calaveras	12
Valley Wells	Inyo	14
Valyermo	Los Angeles	14
Van Nuys	Los Angeles	9
Vandenberg Air Force Base	Santa Barbara	5
Vandenburg Village	Santa Barbara	5

City	County	CZ
Venice	Los Angeles	6
Ventupopa	Santa Barbara	4
Ventura	Ventura	6
Verdugo Mountains	Los Angeles	9
Vermilion Valley Dam	Fresno	16
Vernalis	San Joaquin	12
Vernon	Los Angeles	8
Verona	Sutter	11
Victor	San Joaquin	12
Victorville	San Bernardino	14
Vidal	San Bernardino	15
Vidal Junction	San Bernardino	15
Vidal Valley	San Bernardino	15
Vidal Wash	San Bernardino	15
View Park	Los Angeles	9
Viewland	Lassen	16
Villa Park	Orange	8
Vina	Tehama	11
Vinagre Wash	Imperial	15
Vincent	Los Angeles	14
Vine Hill	Contra Costa	3
Vineyard Canyon	Monterey	4
Vinton	Plumas	16
Viola	Shasta	16
Visalia	Tulare	13
Vista	San Diego	7
Volcano	Amador	12
Volcanoville	El Dorado	16
Volta	Merced	12
Vorden	Sacramento	12
W		
Waddington	Humboklt	1
Walker Pass	Kem	16
Wallace	Calaveras	12
Walnut	Los Angeles	9
Walnut Creek	Contra Costa	12
Walnut Grove	Sacramento	12
Walnut Park	Los Angeles	8
Warner Mountains	Modoc	16
Warner Springs	San Diego	14
Warnersville	Stanislaus	12
Wasco	Kem	13
Washington	Nevada	16
Waterford	Stanislaus	12
Waterloo	San Joaquin	12
Watson Wash	San Bernardino	14
Watsonville	Santa Cruz	3
Waucoba Mountain	Inyo	16
Waucoba Wash	Inyo	16
Waukena	Tulare	13
Wawona	Mariposa	16
Weaverville	Trinity	16
Weed	Siskiyou	16
Weed Patch	Kem	13
Weimar	Placer	11
Weitchpec	Humboklt	2
Weldon	Kem	16
Wendel	Lassen	16
Weott	Humboklt	1
West Athens	Los Angeles	8
West Carson	Los Angeles	6
West Compton	Los Angeles	8
West Covina	Los Angeles	9
West Hollywood	Los Angeles	9
West Mesa	Imperial	15
West Modesto	Stanislaus	12
West Pittsburg	Contra Costa	12
West Point	Calaveras	12
West Puente Valley	Los Angeles	9
West Sacramento	Yolo	12
West Walker River	Mono	16
West Whittier-Los Nietos	Los Angeles	9
Westend	San Bernardino	14
Westhaven	Fresno	13
Westhaven	Humboklt	1
Westlake Village	Los Angeles	9
Westley	Stanislaus	12
Westminster	Orange	6
Westmont	Los Angeles	8
Westmorland	Imperial	15
Westport	Mendocino	1
Westwood	Lassen	16
Whale Rock Reservoir	San Luis Obispo	5
Wheatland	Yuba	11
Wheeler Ridge	Kem	13
Wheeler Springs	Ventura	16
Whipple Mountains	San Bernardino	15
Whiskeytown	Shasta	11
Whiskeytown Lake	Shasta	11
White Horse	Modoc	16
White Mountain Peak	Mono	16
White Mountains	Inyo	16
White Mountains	Mono	16
White River (Town)	Tulare	13
White Rock	Sacramento	12
White Water	Riverside	15
White Wolf	Tuolumne	16
Whitehorn	Humboklt	1
Whitehorse Flat Reservoir	Modoc	16
Whitewater River (North Fork)	San Bernardino	16
Whitewater River (South Fork)	San Bernardino	16
Whitley Gardens	San Luis Obispo	4
Whitney	Placer	11
Whittier	Los Angeles	9
Whittier Narrows Dam	Los Angeles	9
Wiest	Imperial	15
Wilbur Springs	Colusa	11
Wildomar	Riverside	10
Wildrose RS	Inyo	16
Williams	Colusa	11

City	County	CZ
Williams Peak	Mendocino	2
Willits	Mendocino	2
Willlow Creek	Humboklt	2
Willow Brook	Los Angeles	8
Willow Creek Camp	Inyo	16
Willow Ranch	Modoc	16
Willow Springs	Kem	14
Willow Wash	San Bernardino	14
Willowbrook	Los Angeles	8
Willows	Glenn	11
Wilseyville	Calaveras	12
Wilsona Gardens	Los Angeles	14
Wilsonia	Tulare	16
Wilton	Sacramento	12
Winchester	Riverside	10
Windsor	Sonoma	2
Wingate Wash	Inyo	14
Winston Wash	San Bernardino	14
Winterhaven	Imperial	15
Winters	Yolo	12
Winton	Merced	12
Wishin	Madera	16
Wishin Reservoir	Fresno	16
Wister	Imperial	15
Wofford Heights	Kem	16
Woodacre	Marin	2
Woodbridge	San Joaquin	12
Woodcrest	Riverside	10
Woodfords	Alpine	16
Woodlake	Tulare	13
Woodland	Yolo	12
Woodland Hills	Los Angeles	9
Woodleaf	Yuba	16
Woodman	Mendocino	2
Woodside	San Mateo	3
Woodville	Tulare	13
Woody	Kem	13
Wrightwood	San Bernardino	16
Wunpost	Monterey	4
Wyandotte	Butte	11
Wynola	San Diego	14
Wyntoon	Siskiyou	16
Y		
Yermo	San Bernardino	14
Yettem	Tulare	13
Yolo	Yolo	12
Yolo Bypass	Solano	12
Yolo Bypass	Yolo	12
Yorba Linda	Orange	8
Yorkville	Mendocino	2
Yosemite Valley	Mariposa	16
Yosemite Village	Mariposa	16
Yountville	Napa	2
Yreka	Siskiyou	16
Yuba City	Sutter	11
Yucaipa	San Bernardino	10
Yucca Mountain	Tulare	16
Yucca Valley	San Bernardino	14
Yuha Desert	Imperial	15
Z		
Zamora	Yolo	12
Zenia	Trinity	2
Zuma Canyon	Los Angeles	6

JA2.2 California Design Location Data

The data contained in the following table was obtained through a joint effort by the Southern California Chapter and the Golden Gate Chapter of ASHRAE. It is reprinted here with the written permission of Southern California Chapter ASHRAE, Inc. The values for 1.0% drybulb and 1.0% mean coincident wetbulb (MCWB) are interpolated.[2] ~~These values are intended to be used with the~~

The data in Table 2-3 is developed from A full listing of design location data for California is contained in the ASHRAE publication *SPCDX, Climate Data for Region X, Arizona, California, Hawaii, and Nevada* (ISBN 200021, May 1982) and *Supplement to Climatic Data for Region X, Arizona, California, Hawaii, Nevada* (ISBN 20002956, November 1994). The publication may be ordered from:

Order Desk
Building News
10801 National Blvd.
Los Angeles, CA 90064
(888) 264-7483 or (310) 474-7771
http://www.bnibooks.com

[2] The interpolation formula is 2.0%value + 0.6667 (0.5%Value – 2.0% value + 0.5).

Table ~~1~~2-3 – Design Day Data for California Cities

						Cooling											Heating			
						0.1%		0.5%		1.0%		2.0%								
County	City	Climate Zone	Latitude	Elevation (ft)	Longitude	DB	MCWB	DB	MCWB	DB	MCWB	DB	MCWB	Design Wetbulb 0.1%	Design Wetbulb 0.5%	Outdoor Daily Range	Winter Median of Extremes	Design Drybulb (0.2%)	Design Drybulb (0.6%)	HDD*
Alameda	Alameda NAS	3	37.8	15	122.3	88	65	82	64	80	64	76	62	~~73~~66	~~34~~64	21	35	~~31~~38	~~34~~40	2507
Alameda	Albany	3	37.9	40	122.3	88	65	83	64	81	64	77	62	66	64	16	30	35	38	
Alameda	Ashland	3	37.7	45	122.1	92	66	86	65	85	64	81	62	68	66	24	26	31	34	977
Alameda	Berkeley	3	37.9	345	122.3	90	64	83	63	81	63	76	61	~~70~~66	~~68~~64	16	33	~~33~~37	~~36~~40	2950
Alameda	Castro Valley	3	37.6	177	122.2	93	67	87	67	85	67	80	65	69	68	25	24	29	32	
Alameda	Cherryland	3	37.5	100		93	67	86	66	84	66	79	64	~~72~~69	~~70~~67	24	26	31	~~34~~37	
Alameda	Dublin	12	37.7	200	121.5	99	69	93	67	91	67	86	65	70	68	35	24	29	32	
Alameda	Fremont	3	37.5	56	122.0	94	67	88	65	86	65	81	63	69	67	24	25	30	33	
Alameda	Hayward	3	37.7	530	122.1	92	66	86	65	85	64	81	62	~~77~~68	~~75~~66	24	26	~~29~~31	~~32~~34	2909
Alameda	Livermore	12	37.7	490	122.0	100	69	95	68	93	68	88	67	~~73~~71	~~71~~70	35	22	~~29~~25	~~32~~28	3012
Alameda	Newark	3	37.5	10	122.0	94	68	89	67	87	67	82	65	~~68~~70	~~66~~68	24	29	~~21~~34	~~25~~36	
Alameda	Oakland AP	3	37.7	6	122.2	91	66	84	64	82	64	77	62	~~73~~67	~~71~~65	20	32	~~28~~34	~~32~~37	2909
Alameda	Oakland Museum	3	37.8	30	122.2	96	68	89	66	87	65	82	63	~~67~~69	~~65~~67	20	31	~~34~~33	~~37~~36	
Alameda	Piedmont	3	37.8	325	122.0	96	68	89	66	87	65	82	63	70	68	23	31	33	36	
Alameda	Pleasanton	12	37.6	350	121.8	97	68	94	67	93	67	89	65	70	68	35	24	29	32	
Alameda	San Leandro	3	37.7	45	122.2	89	67	83	64	81	64	76	62	~~66~~69	~~64~~66	22	28	~~25~~33	~~28~~35	
Alameda	San Lorenzo	3	37.7	45	122.1	89	67	83	64	81	64	76	62	~~66~~69	~~64~~66	23	28	~~25~~33	~~28~~36	
Alameda	Union City	3	37.6	5	122.1	90	67	87	66	85	65	81	63	69	67	20	25	30	33	
Alameda	Upper San Leandro	3	37.8	394		93	67	87	66	85	65	80	63	~~70~~69	~~68~~67	22	28	~~24~~33	~~27~~35	
Alpine	Woodfords	16	38.8	5671	119.8	92	59	89	58	88	58	84	56	~~74~~63	~~72~~61	32	0	~~32~~5	~~35~~12	6047
Amador	Electra PH	12	38.3	715	120.7	106	70	102	69	101	69	98	68	73	71	41	23	~~38~~28	~~41~~31	2858
Amador	Ione	12	38.3	298	120.9	101	70	97	68	95	68	91	67	~~75~~72	~~71~~70	38	23	~~22~~28	~~26~~31	
Amador	Tiger Creek PH	12	38.5	2355	120.5	100	66	96	65	95	65	92	63	~~67~~69	~~65~~67	36	20	~~34~~26	~~36~~29	3795
Amador/Calaveras	Salt Springs PH	16	38.5	3700	120.2	95	62	92	61	91	61	87	59	~~69~~66	~~66~~64	27	19	~~33~~25	~~35~~28	3857
Butte	Centerville PH	11	39.8	522	121.7	105	70	100	68	99	68	96	67	~~65~~72	~~63~~70	40	25	~~6~~30	~~13~~33	2895
Butte	Chico Exp Sta	11	39.7	205	121.8	105	70	102	69	100	69	96	68	72	~~70~~71	37	22	~~31~~27	~~34~~30	2878

						Cooling											Heating			
						0.1%		0.5%		1.0%		2.0%								
County	City	Climate Zone	Latitude	Elevation (ft)	Longitude	DB	MCWB	DB	MCWB	DB	MCWB	DB	MCWB	Design Wetbulb 0.1%	Design Wetbulb 0.5%	Outdoor Daily Range	Winter Median of Extremes	Design Drybulb (0.2%)	Design Drybulb (0.6%)	HDD*
Butte	De Sabla	11	39.9	2713	121.6	97	66	94	64	92	64	88	62	~~74~~68	~~71~~66	35	18	~~30~~24	~~34~~27	4237
Butte	Las Plumas	11	39.7	506		104	71	101	70	100	70	96	68	73	71	32	24	29	32	
Butte	Oroville East	11	39.5	171		106	71	104	70	102	70	98	69	74	72	37	25	30	33	1385
Butte	Oroville RS	11	39.5	300	121.6	106	71	104	70	102	70	98	69	74	72	37	25	30	33	
Butte	Palermo	11	39.4	154	121.5	106	71	104	70	102	70	98	69	74	72	37	25	30	33	1170
Butte	Paradise	11	39.8	1750	121.6	102	69	99	67	98	67	94	66	~~74~~71	~~71~~69	34	25	~~33~~30	~~36~~33	
Butte	South Oroville	11	39.5	174	121.6	106	71	104	70	102	70	98	69	74	72	37	25	30	33	1385
Butte	Thermalito	11	37.9	25	121.6	106	71	104	70	102	70	98	69	74	72	37	25	30	33	
Calaveras	Camp Pardee	12	38.2	658	120.9	106	71	103	70	102	70	98	69	~~70~~74	~~68~~72	36	27	~~26~~32	~~29~~35	2812
Colusa	Colusa	11	39.2	60	122.0	103	72	100	70	98	70	94	68	74	~~72~~71	36	23	~~33~~29	~~35~~31	2793
Colusa	East Park Res	11	39.4	1205	122.5	101	69	97	68	96	68	92	66	~~68~~71	~~66~~69	38	19	~~31~~25	~~34~~28	3455
Colusa	Williams	11	39.2	85	122.2	104	71	100	70	98	70	94	68	~~68~~73	~~66~~71	36	24	~~20~~29	~~24~~32	
Colusa	Willows	11	39.5	140		104	71	100	70	98	70	94	68	~~71~~73	~~69~~71	36	22	28	31	2836
Contra Costa	Alamo	12	37.9	410	122.9	102	69	97	68	96	68	92	66	72	70	30	23	28	31	
Contra Costa	Antioch	12	38.0	60	121.8	102	70	97	68	95	68	91	66	~~69~~70	~~66~~69	34	22	~~30~~28	~~33~~31	2627
Contra Costa	Blackhawk	12	37.7	10		88	65	82	64	80	64	76	62	66	64	21	35	38	40	977
Contra Costa	Brentwood	12	37.9	71	121.7	102	70	97	68	95	67	89	65	71	68	34	27	32	35	
Contra Costa	Clayton	12	38.0	60	121.9	102	70	97	68	95	67	89	65	71	68	34	27	32	35	
Contra Costa	Concord	12	38.0	195	112.0	102	70	97	68	95	67	89	65	~~74~~71	~~72~~68	34	27	~~33~~32	35	3035
Contra Costa	Crockett	12	38.0	9	122.2	96	68	90	66	89	66	85	64	~~66~~70	~~64~~67	23	28	~~20~~33	~~24~~36	
Contra Costa	Danville	12	37.8	368	122.0	102	69	97	68	96	68	92	66	72	70	30	23	28	31	977
Contra Costa	Discovery Bay	12	38.1	10	121.6	102	70	97	68	95	67	89	65	71	68	34	27	32	35	
Contra Costa	El Cerrito	3	37.8	70	122.3	91	66	84	64	81	64	75	62	68	65	17	30	35	38	
Contra Costa	El Sobrante	3	37.9	55	122.3	91	66	87	65	86	65	82	64	69	67	25	30	35	38	823
Contra Costa	Hercules	3	38.0	15	122.3	91	66	87	65	86	65	82	64	69	67	25	30	35	38	823
Contra Costa	Lafayette	12	37.9	535	122.1	100	69	94	67	92	67	87	66	71	69	32	24	29	32	
Contra Costa	Martinez FS	12	38.0	40	122.1	99	67	94	66	92	66	88	65	~~72~~71	~~70~~69	36	28	~~29~~33	~~31~~35	
Contra Costa	Moraga	12	37.8	600	122.2	99	68	93	66	91	66	86	64	70	68	27	21	26	29	
Contra Costa	Mount Diablo	12	37.9	2100	121.9	101	68	96	66	93	66	87	65	~~61~~68	59	28	27	~~10~~32	~~14~~35	4600

						Cooling											Heating			
						0.1%		0.5%		1.0%		2.0%								
County	City	Climate Zone	Latitude	Elevation (ft)	Longitude	DB	MCWB	DB	MCWB	DB	MCWB	DB	MCWB	Design Wetbulb 0.1%	Design Wetbulb 0.5%	Outdoor Daily Range	Winter Median of Extremes	Design Drybulb (0.2%)	Design Drybulb (0.6%)	HDD*
Contra Costa	Oakley	12	38.0	20	121.7	102	70	97	68	95	68	91	66	70	69	34	22	28	31	
Contra Costa	Orinda	12	37.9	550	122.2	99	68	93	66	91	66	86	64	70	68	32	21	26	29	
Contra Costa	Pinole	3	38.0	10	122.3	91	66	87	65	86	65	82	64	69	67	25	30	35	38	
Contra Costa	Pittsburg	12	38.0	50	121.8	102	70	97	68	95	68	90	67	72	70	34	26	32	35	
Contra Costa	Pleasant Hill	12	37.9	102	122.0	96	68	93	67	92	67	88	65	70	68	34	25	30	33	
Contra Costa	Port Chicago ND	12	38.0	50	122.0	98	69	94	68	92	68	88	66	~~74~~71	~~72~~69	34	28	~~32~~33	~~35~~36	
Contra Costa	Richmond	3	37.9	55	121.6	88	65	84	64	82	64	77	62	~~74~~67	~~72~~65	17	31	~~33~~36	~~35~~38	2684
Contra Costa	Rodeo	3	38.1	15	122.3	93	67	90	66	88	66	84	64	70	68	23	28	33	36	823
Contra Costa	Saint Mary's College	12	37.8	623	122.1	98	69	93	68	91	68	86	66	~~73~~71	~~71~~69	28	21	~~35~~27	~~37~~30	3543
Contra Costa	San Pablo	3	37.6	30	122.3	90	65	84	63	82	63	77	61	~~72~~69	~~70~~66	17	29	~~31~~34	~~34~~37	
Contra Costa	San Ramon	12	37.7	360	122.0	99	69	93	67	91	67	86	65	70	68	35	24	29	32	1369
Contra Costa	Walnut Creek	12	37.9	245	122.1	100	69	94	67	92	67	87	66	74	72	32	23	33	35	
Contra Costa	West Pittsburg	12	38.0	12	121.9	102	70	97	68	95	68	90	67	72	70	34	26	32	35	
Del Norte	Crescent City	1	41.8	40	124.2	75	61	69	59	68	59	65	58	~~72~~61	~~70~~60	18	28	~~28~~33	~~31~~36	4445
Del Norte	Elk Valley	16	42.0	1705	123.7	96	65	90	63	88	63	84	61	~~73~~67	~~71~~65	39	16	~~34~~23	~~36~~27	5404
Del Norte	Idlewild	1	41.9	1250	124.0	103	68	96	66	95	66	92	65	~~72~~69	~~71~~67	40	18	~~30~~24	~~32~~27	
Del Norte	Klamath	1	41.5	25	124.1	79	62	71	60	70	60	66	58	~~75~~64	~~73~~61	18	26	~~30~~31	~~34~~33	4509
El Dorado	Cameron Park	12	38.6	1800	121.0	101	67	98	66	97	66	93	65	70	68	42	20	26	29	2235
El Dorado	El Dorado Hills	12	38.6	673		103	70	100	69	98	69	94	67	72	71	36	24	30	34	
El Dorado	Georgetown RS	12	38.9	3001	120.8	98	64	95	63	94	63	90	61	~~70~~68	~~68~~66	31	18	~~23~~24	~~26~~27	
El Dorado	Placerville	12	38.7	1890	120.8	101	67	98	66	97	66	93	65	~~73~~70	~~71~~68	42	20	~~34~~26	~~37~~29	4086
El Dorado	Placerville IFG	12	38.7	2755	120.8	100	66	97	65	96	65	92	64	~~70~~69	~~68~~67	42	23	~~26~~28	~~29~~31	
El Dorado	South Lake Tahoe	16	38.9	6200	120.0	85	56	82	55	79	55	71	54	60	58	33	-2	3	10	
Fresno	Auberry	13	37.1	2140	119.5	102	69	98	67	97	66	95	64	~~74~~71	~~72~~69	36	21	~~30~~27	~~34~~30	3313
Fresno	Bonadella Ranchos – Madera Rancho	13	36.8	270		105	72	101	70	100	70	96	68	~~0~~74	~~0~~72	40		~~0~~29	~~0~~32	1273
Fresno	Calwa	13	36.8	330	119.8	105	73	101	71	100	70	97	68	75	73	34	23	27	29	
Fresno	Clovis	13	36.8	404	119.7	105	72	102	70	101	70	98	68	~~71~~74	~~68~~72	36	22	~~32~~28	~~35~~32	
Fresno	Coalinga	13	36.2	671	120.4	103	70	98	70	97	70	93	69	~~74~~73	72	34	23	~~33~~28	~~35~~31	2592
Fresno	Five Points	13	36.4	285	120.2	103	71	99	70	97	70	93	68	73	71	36	21	~~32~~27	~~35~~30	

						Cooling											Heating			
						0.1%		0.5%		1.0%		2.0%								
County	City	Climate Zone	Latitude	Elevation (ft)	Longitude	DB	MCWB	DB	MCWB	DB	MCWB	DB	MCWB	Design Wetbulb 0.1%	Design Wetbulb 0.5%	Outdoor Daily Range	Winter Median of Extremes	Design Drybulb (0.2%)	Design Drybulb (0.6%)	HDD*
Fresno	Fresno AP	13	36.8	328	119.7	104	73	101	71	100	70	97	68	~~69~~75	~~67~~73	34	24	~~30~~28	~~33~~30	2650
Fresno	Friant Gov Camp	13	37.0	410	119.7	106	72	103	70	102	70	100	68	~~75~~74	~~73~~72	40	23	28	~~30~~31	2768
Fresno	Huntington Lake	16	37.2	7020	119.2	80	55	77	54	76	53	73	51	~~71~~58	~~69~~56	25	3	~~38~~11	~~41~~16	7632
Fresno	Kerman	13	36.6	216	120.1	105	73	101	71	100	70	97	68	75	73	34	24	28	30	1262
Fresno	Kingsburg	13	36.4	297	119.6	104	73	101	71	100	71	97	69	75	73	36	24	30	34	1300
Fresno	Lakeshore	16	40.9	1075	119.2	104	69	100	68	99	68	95	66	71	69	28	29	34	36	
Fresno	Little Panoche	13	36.8	677		100	68	94	67	92	67	86	66	~~74~~71	~~72~~69	33	23	~~29~~28	~~32~~31	
Fresno	Mendota	13	36.7	169	120.4	105	73	101	71	100	70	97	68	75	73	34	24	28	30	1273
Fresno	Miramonte	13	34.4	750	119.1	102	71	97	69	95	69	91	68	73	71	38	25	29	32	771
Fresno	Orange Cove	13	36.6	431	119.3	104	71	100	69	99	69	97	68	~~72~~73	~~70~~71	38	25	~~37~~30	~~40~~33	2684
Fresno	Parlier	13	36.6	320	119.5	104	73	101	71	100	70	97	68	75	73	38	24	30	34	1262
Fresno	Reedley	13	36.6	344	119.7	104	71	101	70	100	70	96	68	74	72	40	24	30	34	
Fresno	Sanger	13	36.7	364	119.6	105	72	101	70	100	70	96	68	~~70~~74	~~68~~72	37	24	~~29~~30	~~32~~34	
Fresno	Selma	13	36.6	305	119.6	104	73	101	71	100	70	97	68	75	73	38	24	30	34	
Glenn	Orland	11	39.8	254	122.2	105	71	102	70	101	70	97	68	~~70~~73	~~68~~71	36	22	~~26~~28	~~29~~31	2824
Glenn	Stony Gorge Res	11	39.6	791	122.5	104	70	99	69	97	69	93	67	72	70	37	21	~~28~~27	30	3149
Humboldt	Alderpoint	2	40.2	460	123.6	100	69	95	67	94	67	90	65	~~66~~70	~~64~~68	39	21	~~35~~27	~~38~~30	3424
Humboldt	Arcata	1	41.0	218	124.1	75	61	69	59	68	59	65	58	~~73~~61	~~71~~60	11	28	~~36~~31	~~38~~33	5029
Humboldt	Butler Valley (Korbel)	1	40.7	420	123.9	91	66	86	64	85	64	81	62	67	65	22	20	~~5~~26	~~12~~29	
Humboldt	Eureka	1	40.8	43	124.2	75	61	69	59	68	59	65	58	~~72~~61	~~70~~60	11	30	~~31~~35	~~34~~38	4679
Humboldt	Ferndale	1	40.5	1445	124.3	76	57	66	56	65	56	62	54	~~69~~59	~~67~~57	12	28	~~32~~33	35	
Humboldt	Fortuna	1	40.6	100	124.2	75	61	69	59	68	59	65	58	61	60	11	30	35	38	2000
Humboldt	Hoopa	2	41.0	360	123.7	100	67	92	66	91	66	87	64	~~70~~69	~~68~~67	25	23	~~33~~28	~~35~~31	
Humboldt	McKinleyville	1	40.9	33	124.1	75	61	69	59	68	59	65	58	61	60	11	28	31	33	1995
Humboldt	Orick Prairie Creek	1	41.4	161	124.0	80	61	75	60	74	60	70	59	~~74~~63	~~71~~61	23	25	30	~~34~~33	4816
Humboldt	Orleans	2	41.3	403	123.5	104	70	97	68	95	68	91	66	~~73~~71	~~71~~69	42	21	~~28~~27	~~31~~30	3628
Humboldt	Scotia	1	40.5	139	124.4	78	61	74	60	73	60	69	58	~~68~~63	~~66~~61	19	28	~~21~~33	~~25~~35	3954
Humboldt	Shelter Cove	1	40.0	110	124.1	80	61	73	60	72	59	68	57	~~72~~63	~~70~~61	15	34	~~34~~39	~~36~~41	
Humboldt	Willow Creek	2	41.0	461	123.0	104	70	98	68	96	68	92	66	~~72~~71	~~70~~69	35	22	~~39~~28	~~42~~31	

						Cooling											Heating			
						0.1%		0.5%		1.0%		2.0%								
County	City	Climate Zone	Latitude	Elevation (ft)	Longitude	DB	MCWB	DB	MCWB	DB	MCWB	DB	MCWB	Design Wetbulb 0.1%	Design Wetbulb 0.5%	Outdoor Daily Range	Winter Median of Extremes	Design Drybulb (0.2%)	Design Drybulb (0.6%)	HDD*
Humbolt	Richardson Grove	2	40.0	500	123.8	96	67	92	66	91	66	87	64	~~74~~69	~~72~~67	28	25	~~33~~30	~~35~~33	
Imperial	Brawley 2 SW	15	33.0	-100	115.6	113	74	110	73	109	73	105	73	~~72~~81	~~70~~79	32	25	~~28~~30	~~31~~33	1204
Imperial	Calexico	15	32.7	12	115.5	114	74	110	73	109	73	106	71	81	79	28	26	31	34	
Imperial	El Centro	15	32.8	-30	115.6	115	74	111	73	110	73	107	73	~~74~~81	~~72~~79	34	26	~~34~~35	~~36~~38	1212
Imperial	Gold Rock Rch	15	32.9	485		113	73	110	72	109	72	106	70	~~70~~79	~~68~~77	28	31	~~18~~36	~~23~~38	
Imperial	Imperial AP	15	32.8	-59	115.6	114	74	110	73	109	73	106	72	~~67~~81	~~65~~79	31	26	~~16~~31	~~21~~34	1060
Imperial	Imperial CO	15	32.9	-64		112	73	108	72	107	72	104	71	~~71~~80	~~69~~78	31	29	~~39~~34	~~41~~36	976
Inyo	Bishop AP	16	37.4	4108	118.4	103	61	100	60	99	60	97	58	~~64~~65	~~62~~63	40	5	~~3~~12	~~7~~16	4313
Inyo	Death Valley	14	36.5	-194	116.9	121	77	118	76	117	76	114	74	~~68~~81	~~66~~79	28	27	~~24~~33	~~27~~37	1147
Inyo	Deep Springs Clg	16	37.5	5225	118.0	98	60	95	59	94	59	92	58	~~81~~64	~~79~~62	35	-3	~~33~~2	~~37~~8	
Inyo	Haiwee	16	36.1	3825	118.0	102	65	99	64	98	64	95	62	~~73~~68	~~71~~66	27	15	~~36~~22	~~38~~26	3700
Inyo	Independence	16	36.8	3950	118.2	104	61	101	60	100	60	97	60	~~80~~65	~~78~~63	31	12	~~34~~19	~~36~~24	
Inyo	Wildrose RS	16	36.3	4100		100	64	97	63	96	63	93	61	~~74~~68	~~72~~66	33	13	~~28~~20	~~30~~24	
Kern	Alta Sierra	16	35.7	6500	118.6	87	62	84	61	83	61	80	59	65	63	32	-4	1	8	2428
Kern	Arvin	13	35.2	445	118.8	106	71	102	69	101	69	98	68	74	72	30	26	29	32	
Kern	Bakersfield AP	13	35.4	475	119.1	106	71	102	70	101	70	98	68	~~77~~74	~~75~~72	34	26	~~28~~31	~~31~~35	2185
Kern	Blackwells Corner	13	35.6	644	119.9	99	68	94	66	93	66	89	65	~~66~~71	~~64~~69	31	23	~~38~~28	~~40~~32	
Kern	Boron AFS	14	35.1	3015	117.6	106	70	103	69	102	69	98	68	~~70~~73	~~68~~71	35	18	~~32~~23	~~34~~26	3000
Kern	Buttonwillow	13	35.4	269	119.5	103	71	99	70	98	70	95	68	~~67~~74	~~65~~72	36	20	26	29	2621
Kern	California City	14	35.1	2400	118.0	107	69	104	68	103	68	99	66	72	70	33	10	17	22	2572
Kern	Cantil	14	35.3	2010	118.0	111	71	107	71	106	71	103	70	74	~~72~~73	32	12	~~30~~19	~~33~~24	
Kern	Delano	13	35.8	323	119.3	106	71	102	70	101	70	98	69	74	72	36	22	25	28	
Kern	Edwards AFB	14	34.9	2316	117.9	107	69	104	68	103	68	99	66	~~73~~72	~~71~~70	35	10	~~35~~17	~~37~~22	3123
Kern	Glennville	16	35.7	3140	118.7	97	67	94	66	93	66	90	64	~~73~~70	~~71~~68	43	11	~~35~~18	~~37~~23	4423
Kern	Golden Hills	16	35.1	4000		97	66	93	65	92	65	89	64	69	67	33	13	20	24	
Kern	Greenacres	13	35.3	400	119.1	106	71	102	70	101	70	98	68	74	72	34	26	31	35	934
Kern	Hillcrest Center	16	35.4	500		106	71	102	70	101	70	98	68	74	72	34	26	31	35	
Kern	Inyokern NAS	14	35.7	2440	117.8	110	71	106	68	105	68	102	66	~~70~~75	~~68~~71	37	15	~~40~~22	~~42~~26	2772
Kern	Kern River PH 3	16	35.8	2703	118.6	103	69	100	68	99	68	96	66	~~75~~72	~~73~~70	34	19	~~35~~25	~~37~~28	2891

						Cooling											Heating			
						0.1%		0.5%		1.0%		2.0%								
County	City	Climate Zone	Latitude	Elevation (ft)	Longitude	DB	MCWB	DB	MCWB	DB	MCWB	DB	MCWB	Design Wetbulb 0.1%	Design Wetbulb 0.5%	Outdoor Daily Range	Winter Median of Extremes	Design Drybulb (0.2%)	Design Drybulb (0.6%)	HDD*
Kern	Lamont	13	35.3	500	120.0	106	72	102	71	101	71	98	69	75	73	34	26	32	35	
Kern	Maricopa	13	35.1	675	119.4	106	71	102	70	101	70	98	68	74	~~71~~72	29	25	30	33	2302
Kern	McFarland	13	35.6	350	119.2	106	71	102	70	101	70	98	69	74	72	36	22	25	28	1162
Kern	Mojave	14	35.1	2735	118.2	106	68	102	67	101	67	98	66	~~70~~71	~~68~~69	35	16	~~34~~22	~~36~~26	3012
Kern	Oildale	13	35.5	450	119.0	106	71	102	70	101	70	98	68	~~70~~74	~~68~~72	34	26	~~37~~31	~~39~~35	
Kern	Randsburg	14	35.3	3570	117.7	105	67	102	66	101	66	97	65	~~71~~70	~~67~~68	30	19	~~37~~25	~~40~~28	2922
Kern	Ridgecrest	14	35.6	2340	117.8	110	70	106	68	105	68	102	66	75	71	35	15	22	26	
Kern	Rosamond	14	34.8	2326	118.2	106	68	102	67	101	67	98	66	71	69	35	16	22	26	1455
Kern	Shafter	13	35.5	345	119.2	106	71	102	70	101	70	98	68	74	~~71~~72	28	24	~~33~~29	~~36~~32	2185
Kern	Taft	13	35.1	987	119.5	106	71	102	70	101	70	98	68	74	72	34	26	31	35	934
Kern	Tehachapi	16	35.1	3975	118.5	97	66	93	65	92	65	89	64	~~74~~69	~~71~~67	33	13	~~32~~20	~~35~~24	4494
Kern	Wasco	13	35.6	333	119.3	105	71	101	70	100	70	97	68	~~71~~74	~~69~~72	36	23	~~22~~28	~~26~~31	2466
Kings	Avenal	13	36.0	550	120.1	103	70	98	70	97	70	93	69	73	72	34	23	28	31	
Kings	Corcoran	13	36.1	200	119.7	106	72	102	71	101	71	98	70	74	~~72~~73	36	22	~~33~~28	~~35~~31	2666
Kings	Hanford	13	36.3	242	119.7	102	71	99	70	98	70	94	68	73	~~70~~71	37	22	~~30~~28	~~32~~31	2736
Kings	Kern River PH 1	13	35.5	970	118.8	106	72	103	71	102	71	99	69	75	73	26	30	~~28~~35	~~30~~37	1878
Kings	Kettleman Stn	13	36.1	508	120.1	104	71	100	70	98	70	93	68	~~72~~74	~~70~~72	31	26	~~25~~31	~~28~~34	2180
Kings	Lemoore NAS	13	36.3	228	120.0	104	72	101	71	100	71	97	69	74	72	37	19	~~30~~25	~~33~~28	2960
Lake	Clearlake Highlands	2	39.0	1360	122.7	101	69	97	68	95	67	89	65	71	~~68~~69	36	15	~~32~~22	~~35~~26	
Lake	Lakeport	2	39.0	1347	122.9	97	67	93	66	92	65	88	63	~~74~~69	~~72~~67	41	20	~~27~~26	~~30~~29	3728
Lake	Upper Lake RS	2	39.2	1347	123.0	98	68	95	67	94	66	91	64	73	71	39	18	34	36	
Lassen	Doyle	16	40.0	4390	120.1	96	63	93	62	92	61	88	59	~~68~~66	~~66~~64	42	0	~~20~~5	~~24~~12	
Lassen	Fleming Fish & Game	16	40.4	4000	120.3	96	62	93	61	92	61	88	59	~~73~~66	~~71~~64	40	-3	~~27~~2	~~30~~8	
Lassen	Lodgepole	16	36.6	6735	118.7	84	57	80	56	80	56	78	54	~~72~~60	~~70~~58	26	-4	~~28~~1	~~31~~7	
Lassen	Susanville AP	16	40.4	4148	120.6	98	62	95	61	94	61	90	59	~~70~~66	~~68~~64	38	-1	~~34~~4	~~36~~11	6233
Los Angeles	Agoura Hills	9	34.2	700	118.8	103	70	96	68	94	68	90	66	73	71	29	27	31	34	
Los Angeles	Alhambra	9	34.0	483	118.1	100	71	96	70	94	70	90	68	73	71	25	30	35	37	
Los Angeles	Alondra Park	6	33.9	50	118.3	91	69	86	68	85	68	81	66	71	69	17	35	40	42	
Los Angeles	Altadena	9	34.2	1200	118.1	99	68	94	67	92	67	88	66	~~65~~72	~~63~~70	31	32	~~1~~37	~~8~~39	1920

						Cooling											Heating			
						0.1%		0.5%		1.0%		2.0%								
County	City	Climate Zone	Latitude	Elevation (ft)	Longitude	DB	MCWB	DB	MCWB	DB	MCWB	DB	MCWB	Design Wetbulb 0.1%	Design Wetbulb 0.5%	Outdoor Daily Range	Winter Median of Extremes	Design Drybulb (0.2%)	Design Drybulb (0.6%)	HDD*
Los Angeles	Arcadia	9	34.2	475	118.0	100	69	96	68	95	68	91	67	73	71	30	31	36	38	
Los Angeles	Artesia	8	33.8	50	118.1	99	71	91	70	89	70	85	68	73	71	23	33	37	40	
Los Angeles	Avalon	6	33.4	25	118.3	83	64	75	62	73	62	69	60	~~74~~68	~~72~~66	11	37	~~32~~41	~~35~~44	2204
Los Angeles	Avocado Heights	16	34.2	550	118.0	101	69	97	68	95	68	91	68	~~73~~74	72	30	28	~~28~~32	~~31~~35	741
Los Angeles	Azusa	9	34.1	605	118.2	101	70	97	69	95	69	91	68	74	72	36	31	36	38	
Los Angeles	Baldwin Park	9	34.0	394	118.0	100	69	96	69	94	69	90	68	73	72	32	31	36	38	
Los Angeles	Bell	8	33.9	143	118.2	97	70	91	69	89	69	85	67	72	70	22	33	38	41	
Los Angeles	Bell Gardens	8	33.9	160	118.2	97	70	91	69	87	67	78	62	72	70	24	29	37	40	
Los Angeles	Bellflower	8	33.8	73	118.1	98	70	91	69	89	69	85	67	72	70	21	32	37	40	
Los Angeles	Beverly Hills	9	34.1	268	118.2	94	69	88	68	87	68	83	66	71	69	20	39	43	46	
Los Angeles	Burbank AP	9	34.2	699	118.4	101	70	96	68	94	68	90	67	72	70	28	29	~~35~~34	~~38~~36	1701
Los Angeles	Burbank Vly Pump	9	34.2	655	118.4	101	69	96	68	94	68	90	66	72	70	28	29	34	36	1678
Los Angeles	Calabasas	9	34.2	1100	118.6	102	71	98	70	97	70	93	69	~~70~~73	~~68~~71	26	26	~~31~~30	~~34~~33	2348
Los Angeles	Canoga Park	9	34.2	790	118.6	104	71	99	70	97	70	93	69	~~71~~74	~~69~~72	38	25	~~23~~30	~~27~~33	1884
Los Angeles	Carson	6	33.8	60	118.3	96	69	88	68	86	68	82	66	71	69	19	33	38	40	
Los Angeles	Cerritos	8	33.9	34	118.1	99	71	92	69	90	69	85	68	~~65~~73	~~63~~71	23	33	~~6~~38	~~13~~40	
Los Angeles	Charter Oak	9	34.1	600	117.9	101	70	97	69	95	69	91	68	74	72	34	29	34	36	
Los Angeles	Chatsworth	9	34.2	964	118.6	98	69	93	68	91	68	87	66	72	70	38	26	31	34	664
Los Angeles	Claremont	9	34.1	1201	117.8	101	69	97	68	95	68	91	66	~~74~~73	~~72~~71	34	29	~~26~~34	~~29~~36	2049
Los Angeles	Commerce	8	33.9	175	118.2	98	69	92	68	90	68	86	67	~~74~~72	~~72~~70	23	33	~~33~~37	~~35~~39	
Los Angeles	Compton	8	33.9	71	118.2	97	69	90	68	88	68	83	67	~~74~~72	~~72~~70	21	33	~~33~~37	~~35~~39	1606
Los Angeles	Covina	9	34.1	575	117.9	101	70	97	69	95	69	91	68	~~72~~74	~~70~~72	34	29	~~28~~34	~~31~~36	
Los Angeles	Cudahy	8	33.9	130	118.2	98	70	91	69	89	69	85	67	72	70	21	33	37	39	
Los Angeles	Culver City	8	34.0	106	118.4	96	70	88	69	87	69	83	67	72	70	18	35	~~37~~40	~~39~~42	1515
Los Angeles	Del Aire	6	34.0	100		91	69	84	67	83	67	79	66	71	69	15	37	40	42	383
Los Angeles	Diamond Bar	9	34.0	880	117.8	101	69	97	68	96	68	92	66	73	71	33	28	33	35	
Los Angeles	Downey	8	33.9	110	118.0	98	71	90	70	88	70	84	68	73	71	21	32	37	39	
Los Angeles	Duarte	9	34.1	500	118.0	100	69	96	68	94	68	90	67	73	71	33	31	36	38	
Los Angeles	East Compton	8	34.0	71		97	69	90	68	88	68	83	67	72	70	21	33	37	39	436

						Cooling											Heating			
						0.1%		0.5%		1.0%		2.0%								
County	City	Climate Zone	Latitude	Elevation (ft)	Longitude	DB	MCWB	DB	MCWB	DB	MCWB	DB	MCWB	Design Wetbulb 0.1%	Design Wetbulb 0.5%	Outdoor Daily Range	Winter Median of Extremes	Design Drybulb (0.2%)	Design Drybulb (0.6%)	HDD*
Los Angeles	East La Mirada	9	33.9	115		99	70	91	69	89	69	85	68	73	71	26	31	36	38	
Los Angeles	East Los Angeles	9	34.0	250	118.3	99	69	92	68	90	68	86	67	72	70	21	38	41	43	
Los Angeles	East Pasadena	16	34.2	864	118.1	99	69	94	68	92	68	88	67	73	71	30	32	37	40	452
Los Angeles	East San Gabriel	9	34.1	450		99	70	94	69	92	69	88	68	73	71	30	30	35	37	431
Los Angeles	El Monte	9	34.1	271	118.0	101	71	97	70	95	70	91	68	73	71	30	31	36	39	
Los Angeles	El Segundo	6	33.9	105	118.4	91	69	84	68	83	68	79	66	71	69	14	37	~~34~~40	~~37~~42	
Los Angeles	Encino	9	34.2	750	118.5	103	71	98	69	96	69	92	67	74	71	27	28	33	36	664
Los Angeles	Fairmont	14	34.7	3060	118.4	100	67	96	66	95	66	92	65	~~73~~71	~~71~~69	22	22	~~30~~28	~~33~~31	3330
Los Angeles	Florence-Graham	8	34.0	175		98	69	90	68	88	68	84	67	72	70	19	35	40	43	
Los Angeles	Gardena	8	33.9	40	118.3	92	69	85	68	84	68	80	66	71	69	18	32	37	39	
Los Angeles	Glendale	9	34.2	563	118.3	101	70	96	68	94	68	90	67	~~72~~73	~~69~~71	28	30	~~28~~35	~~31~~37	
Los Angeles	Glendora	9	34.1	822	117.9	102	69	98	68	96	68	92	67	73	71	35	30	35	37	
Los Angeles	Granada Hills	6	34.4	1032	118.5	100	70	95	68	93	68	89	66	73	70	37	28	31	34	664
Los Angeles	Hacienda Hts	9	34.0	300	118.0	100	69	96	68	94	68	90	67	73	71	28	31	36	38	
Los Angeles	Hawaiian Gardens	8	33.8	75	118.1	97	70	91	69	89	69	84	67	72	70	23	32	37	39	
Los Angeles	Hawthorne	8	33.9	70	118.4	92	69	85	68	84	68	80	66	71	69	16	37	40	42	
Los Angeles	Hermosa Beach	6	33.9	16	118.4	92	69	84	68	82	68	78	66	71	69	12	38	42	45	
Los Angeles	Hollywood	9	34.0	384	118.4	96	70	89	69	87	69	83	67	72	70	20	36	41	44	
Los Angeles	Huntington Park	8	34.0	175	118.0	98	70	90	69	88	69	84	67	~~58~~72	~~56~~70	20	38	~~11~~42	~~16~~45	
Los Angeles	Inglewood	8	33.9	105	118.0	92	68	85	67	84	67	80	65	70	68	15	37	40	42	
Los Angeles	La Canada-Flintridge	9	34.2	1365	118.0	99	69	95	68	93	68	88	66	~~73~~72	~~71~~70	30	32	~~25~~36	~~28~~38	
Los Angeles	La Crescenta-Montrose	9	34.2	1565	118.0	98	69	94	68	92	68	87	66	72	70	33	31	35	37	
Los Angeles	La Habra Heights	9	34.0	400	118.0	100	69	94	68	92	68	87	67	72	70	27	30	35	37	
Los Angeles	La Mirada	9	33.9	115	118.0	99	70	91	69	89	69	85	68	73	71	26	31	36	38	
Los Angeles	La Puente	9	34.0	320	118.0	101	71	97	70	95	70	91	69	74	72	28	31	36	38	
Los Angeles	La Verne	9	34.1	1235	118.0	101	69	97	68	95	68	91	67	73	71	34	29	34	36	
Los Angeles	Ladera Heights	9	34.1	100		91	67	84	67	83	67	79	66	71	69	14	37	40	42	383
Los Angeles	Lake Los Angeles	14	34.7	2300	117.8	106	68	102	67	101	67	98	66	72	70	35	12	17	20	1455
Los Angeles	Lakewood	8	33.9	45	118.0	98	70	90	68	88	68	84	66	72	70	22	33	37	40	

						Cooling											Heating			
						0.1%		0.5%		1.0%		2.0%								
County	City	Climate Zone	Latitude	Elevation (ft)	Longitude	DB	MCWB	DB	MCWB	DB	MCWB	DB	MCWB	Design Wetbulb 0.1%	Design Wetbulb 0.5%	Outdoor Daily Range	Winter Median of Extremes	Design Drybulb (0.2%)	Design Drybulb (0.6%)	HDD*
Los Angeles	Lancaster	14	34.7	2340	118.2	106	68	102	67	101	67	98	66	72	70	35	12	17	20	
Los Angeles	Lawndale	8	33.9	66	118.0	92	69	85	68	84	68	80	66	71	69	16	37	40	42	
Los Angeles	Lennox	8	33.9	71	117.8	92	69	85	68	84	68	80	66	71	69	16	37	41	44	
Los Angeles	Llano Shawnee	14	34.5	3820	117.8	104	68	99	67	98	67	95	65	71	69	31	21	27	31	
Los Angeles	Lomita	6	33.8	56	119.0	95	69	87	68	85	68	81	66	71	69	18	33	38	40	
Los Angeles	Long Beach	6	33.7	34	118.2	97	70	88	68	86	67	82	65	65	63	18	35	31	34	
Los Angeles	Long Beach AP	8	33.8	25	118.2	99	71	90	69	88	68	84	66	~~65~~73	~~63~~71	21	33	~~31~~38	~~34~~41	1606
Los Angeles	Los Angeles AP	6	33.9	97	118.4	91	67	84	67	83	67	79	66	~~68~~71	~~66~~69	14	37	~~33~~40	~~35~~42	1819
Los Angeles	Los Angeles CO	9	34.0	270	118.2	99	69	92	68	90	68	86	67	~~71~~72	~~69~~70	21	38	~~40~~41	~~42~~43	1245
Los Angeles	Lynwood	8	33.9	88	118.0	98	70	90	69	88	69	83	67	~~64~~72	~~62~~70	21	32	~~35~~37	~~37~~39	
Los Angeles	Manhattan Beach	6	33.9	120	118.0	91	69	84	68	83	68	79	66	71	69	12	38	42	45	
Los Angeles	Marina del Rey	9	34.1	40	118.5	91	69	84	68	83	68	79	66	71	69	12	38	42	45	383
Los Angeles	Maywood	8	34.0	170	118.0	97	70	91	69	89	69	85	67	72	70	21	34	38	41	
Los Angeles	Monrovia	9	34.2	562	118.3	100	69	96	68	94	68	90	67	73	71	30	33	38	41	
Los Angeles	Montebello	9	34.0	205	118.1	98	69	93	68	91	68	86	67	72	70	24	33	37	39	
Los Angeles	Monterey Park	9	34.0	380	118.0	99	69	94	68	92	68	87	67	72	70	23	30	35	37	
Los Angeles	Mount Wilson	16	34.2	5709	118.1	90	63	85	61	83	60	79	58	~~65~~66	~~63~~64	21	15	~~15~~22	~~20~~26	4296
Los Angeles	Newhall Soledad	9	34.4	1243	118.6	104	70	100	68	99	68	95	67	73	71	42	27	33	36	
Los Angeles	North Hollywood	9	34.2	619	118.4	102	70	97	69	95	69	91	67	73	71	31	28	~~28~~33	~~31~~36	
Los Angeles	Northridge	9	34.2	875	118.5	101	70	96	69	94	69	90	67	73	71	36	30	35	38	650
Los Angeles	Norwalk	8	33.9	97	118.1	99	69	90	68	88	68	84	67	72	70	26	31	35	37	
Los Angeles	Pacoima	16	34.3	895	118.4	104	71	99	70	98	70	94	68	74	72	35	29	34	37	664
Los Angeles	Palmdale AP	14	34.6	2517	118.1	107	67	103	67	102	66	98	64	~~79~~71	~~78~~69	33	12	~~31~~20	~~34~~24	2929
Los Angeles	Palmdale CO	14	34.6	2596	118.1	106	67	102	67	101	66	97	64	71	69	35	13	~~20~~21	~~24~~25	2908
Los Angeles	Palos Verdes	6	33.8	216	119.0	92	69	84	68	82	68	78	66	71	69	14	38	43	46	
Los Angeles	Panorama City	9	34.2	801	118.5	103	71	98	69	96	69	92	67	74	71	32	28	33	36	664
Los Angeles	Paramount	8	33.9	70	117.0	98	70	90	69	88	69	84	67	72	70	22	32	37	40	
Los Angeles	Pasadena	9	34.2	864	118.2	99	69	94	68	92	68	88	67	~~75~~73	~~73~~71	30	32	~~30~~37	~~34~~40	1551
Los Angeles	Pico Rivera	9	34.0	180	118.0	98	70	91	69	89	69	85	67	72	70	24	31	35	38	

						Cooling											Heating			
						0.1%		0.5%		1.0%		2.0%								
County	City	Climate Zone	Latitude	Elevation (ft)	Longitude	DB	MCWB	DB	MCWB	DB	MCWB	DB	MCWB	Design Wetbulb 0.1%	Design Wetbulb 0.5%	Outdoor Daily Range	Winter Median of Extremes	Design Drybulb (0.2%)	Design Drybulb (0.6%)	HDD*
Los Angeles	Pomona Cal Poly	9	34.1	740	117.8	102	70	98	69	97	69	93	67	~~62~~74	~~60~~72	36	27	~~41~~32	~~43~~35	1971
Los Angeles	Quartz Hill	14	34.6	2428	118.2	106	68	102	67	101	67	98	66	72	70	35	12	17	20	1455
Los Angeles	Rancho Palos Verdes	6	33.7	216	118.2	92	69	84	68	82	68	78	66	71	69	14	38	43	46	
Los Angeles	Redondo Beach	6	33.8	45	118.3	92	69	84	68	82	68	78	66	71	69	12	37	42	44	
Los Angeles	Reseda	9	34.2	736	118.5	103	71	98	69	96	69	92	67	74	71	32	28	33	36	664
Los Angeles	Rolling Hills	6	33.6	216	119.0	92	69	84	68	82	68	78	66	71	69	15	38	43	46	
Los Angeles	Rosemead	9	34.0	275	118.0	98	70	90	69	88	69	84	67	72	70	27	30	35	37	
Los Angeles	Rowland Hts	9	33.9	540	118.0	99	70	93	69	91	69	86	68	73	71	27	29	34	36	
Los Angeles	San Antonio Canyon	16	34.2	2394	117.7	100	68	96	67	94	67	90	65	~~66~~72	~~64~~70	33	29	~~25~~35	~~28~~39	
Los Angeles	San Dimas	9	34.0	955	118.4	102	70	98	69	96	69	92	67	~~66~~74	~~64~~72	35	30	~~25~~35	~~28~~37	
Los Angeles	San Fernando	9	34.3	977	118.5	104	71	99	70	98	70	94	68	~~66~~74	~~64~~72	37	30	~~25~~35	~~28~~37	1800
Los Angeles	San Gabriel FD	9	34.1	450	118.1	99	70	94	69	92	69	88	68	~~66~~73	~~64~~71	30	30	~~25~~35	~~28~~37	1532
Los Angeles	San Marino	9	34.2	300	118.1	100	69	95	68	93	68	88	66	~~72~~73	~~70~~71	28	30	~~31~~35	~~34~~37	
Los Angeles	San Pedro	6	33.7	10	118.3	92	69	84	68	82	68	78	66	72	70	13	35	31	34	1819
Los Angeles	Sandberg	16	34.8	4517	118.7	95	63	91	61	90	61	87	59	~~70~~67	~~68~~65	32	17	~~29~~21	~~32~~24	4427
Los Angeles	Santa Clarita	9	34.4	1300	118.5	103	71	98	70	97	70	93	68	74	72	36	30	35	37	
Los Angeles	Santa Fe Springs	9	33.9	280	118.1	99	69	90	68	88	68	84	67	~~74~~72	~~72~~70	24	31	~~35~~36	~~37~~38	
Los Angeles	Santa Monica	6	34.0	15	118.5	85	67	78	66	76	66	72	64	~~67~~69	~~65~~67	15	39	~~31~~44	~~33~~46	1873
Los Angeles	Sepulveda	9	34.2	818	118.5	103	71	98	69	96	69	92	67	74	71	32	28	33	36	664
Los Angeles	Sherman Oaks	9	34.2	657	118.5	103	71	98	69	96	69	92	67	74	71	28	29	34	37	664
Los Angeles	Sierra Madre	9	34.2	1153	118.1	102	69	96	68	94	68	90	67	73	71	27	32	37	39	
Los Angeles	Signal Hill	6	33.5	100	118.2	99	70	90	69	88	68	84	66	72	70	19	35	39	42	
Los Angeles	South El Monte	9	34.0	270	118.1	101	72	97	70	95	70	91	68	74	72	28	31	36	38	
Los Angeles	South Gate	8	33.9	120	118.2	97	70	90	69	88	69	84	67	72	70	21	32	37	39	
Los Angeles	South Pasadena	9	34.0	657	118.2	99	69	94	68	92	68	88	67	73	71	30	31	36	38	
Los Angeles	South San Gabriel	9	34.1	450	118.1	99	70	94	69	92	69	88	68	73	71	73	30	35	37	431
Los Angeles	South Whittier	9	33.9	300	118.0	100	70	92	69	90	69	84	68	73	71	30	31	36	38	
Los Angeles	Studio City	9	34.3	620	118.4	102	70	97	69	95	69	91	67	73	71	31	28	33	36	664
Los Angeles	Sunland	9	34.3	1460	118.3	107	71	102	70	100	70	96	68	74	72	36	28	33	36	

						Cooling											Heating			
						0.1%		0.5%		1.0%		2.0%								
County	City	Climate Zone	Latitude	Elevation (ft)	Longitude	DB	MCWB	DB	MCWB	DB	MCWB	DB	MCWB	Design Wetbulb 0.1%	Design Wetbulb 0.5%	Outdoor Daily Range	Winter Median of Extremes	Design Drybulb (0.2%)	Design Drybulb (0.6%)	HDD*
Los Angeles	Tarzana	6	34.2	800	118.6	104	71	99	69	97	69	93	68	74	71	27	27	32	35	664
Los Angeles	Tejon Rancho	16	35.0	1425	118.8	107	71	103	70	102	70	99	68	~~69~~74	~~67~~72	27	24	~~20~~29	~~24~~32	2602
Los Angeles	Temple City	9	34.1	403	118.1	101	70	95	69	93	69	89	68	73	71	27	30	35	37	
Los Angeles	Termo	16	40.9	5300	120.5	95	60	92	59	91	59	87	57	~~73~~64	~~71~~62	37	-17	~~35~~-11	-~~37~~4	
Los Angeles	Torrance	6	33.8	110	118.3	93	69	86	68	84	68	80	66	~~67~~71	~~65~~69	18	32	~~34~~37	~~36~~39	1859
Los Angeles	Tujunga	9	34.3	1820	118.3	103	70	99	69	98	69	94	67	~~62~~73	~~60~~71	36	20	-~~4~~26	~~0~~29	
Los Angeles	UCLA	9	34.1	430		93	69	86	68	84	68	80	66	71	69	20	39	~~31~~43	~~34~~46	1509
Los Angeles	Valinda	9	34.0	340	117.9	102	70	98	69	96	69	92	68	74	72	28	31	36	38	
Los Angeles	Valyermo RS	14	34.5	3600	117.9	100	67	96	66	95	66	91	65	70	68	41	12	~~33~~19	~~36~~24	3870
Los Angeles	Van Nuys	9	34.2	708	118.5	103	71	98	69	96	69	92	67	74	71	30	28	33	39	664
Los Angeles	View Park	6, 8	34.0	300	118.3	95	69	88	68	85	68	78	66	71	69	18	36	40	43	
Los Angeles	Vincent	14	34.5	3135	118.1	105	67	101	65	100	65	96	64	~~72~~71	~~70~~69	33	10	~~37~~18	~~40~~22	1455
Los Angeles	Walnut	9	34.0	550	117.9	101	70	97	69	96	69	92	69	74	72	30	28	33	35	
Los Angeles	Walnut Park	8	33.9	45	118.2	92	69	84	68	82	68	78	66	71	69	12	37	42	44	450
Los Angeles	West Athens	8	33.9	25		92	69	85	68	84	68	80	66	71	69	18	32	37	39	450
Los Angeles	West Carson	6	33.8	100		92	69	87	68	85	68	81	66	71	69	18	32	37	39	
Los Angeles	West Compton	8	33.9	71		97	69	90	68	88	68	83	67	72	70	21	33	37	39	450
Los Angeles	West Covina	9	34.0	365	117.9	102	70	98	69	96	69	92	68	74	72	34	29	34	36	
Los Angeles	West Hollywood	9	34.0	290	118.4	95	70	89	69	87	69	82	67	72	70	20	38	42	45	
Los Angeles	West Puente Valley	9	34.0	500	117.9	101	71	97	70	95	70	91	68	~~73~~73	~~71~~71	26	31	36	~~39~~39	
Los Angeles	West Whittier-Los Nietos	9	34.0	320	118.1	99	69	90	68	88	68	84	67	~~0~~72	~~0~~70	24	31	~~0~~35	~~0~~38	
Los Angeles	Westlake Village	9	34.2	750	118.8	103	71	99	70	98	70	94	69	73	71	26	26	30	33	
Los Angeles	Westmont	8	33.9	110		96	70	89	69	87	69	83	67	72	70	20	36	41	44	400
Los Angeles	Whittier	9	34.0	320	118.0	99	69	90	68	88	68	84	67	72	70	24	31	35	38	
Los Angeles	Willow Brook	8	33.9	60	118.2	97	70	90	69	88	69	83	67	72	70	21	35	39	42	
Los Angeles	Woodland Hills	9	34.2	944	118.6	104	71	99	70	97	70	93	68	74	72	32	26	31	34	664
Madera	Bonita	13	32.7	105	117.0	91	69	82	67	81	66	78	64	~~0~~70	~~0~~68	20	28	~~0~~32	~~0~~44	1864
Madera	Chowchilla	13	37.0	200	120.3	104	72	101	70	100	70	96	68	74	72	38	22	28	31	1250
Madera	Madera	13	37.0	268	120.1	105	72	101	70	100	70	96	68	~~67~~74	~~65~~72	40	24	~~35~~29	~~37~~32	2673

						Cooling											Heating			
						0.1%		0.5%		1.0%		2.0%								
County	City	Climate Zone	Latitude	Elevation (ft)	Longitude	DB	MCWB	DB	MCWB	DB	MCWB	DB	MCWB	Design Wetbulb 0.1%	Design Wetbulb 0.5%	Outdoor Daily Range	Winter Median of Extremes	Design Drybulb (0.2%)	Design Drybulb (0.6%)	HDD*
Madera	Madera Acres	13	36.9	275		105	72	101	70	100	70	96	68	74	72	40	24	29	32	1250
Madera	North Fork RS	16	37.2	2630	119.5	98	66	95	65	94	64	92	62	~~72~~69	~~69~~67	36	15	~~30~~22	~~33~~26	
Marin	Corte Madera	2	37.9	55	122.5	97	68	91	66	89	66	84	64	~~73~~69	~~71~~68	34	28	~~28~~33	~~31~~35	
Marin	Fairfax	2	38.0	110	122.6	96	68	90	66	88	65	83	63	71	68	34	26	31	34	
Marin	Fort Baker	3	37.8	15	122.5	87	66	81	65	79	65	73	65	67	65	12	33	~~19~~38	~~24~~40	3080
Marin	Hamilton AFB	2	38.1	3	122.5	95	69	88	67	86	67	81	65	~~65~~73	~~63~~70	28	27	~~37~~30	~~39~~32	3311
Marin	Kentfield	2	38.0	120	122.6	97	66	91	65	89	65	84	63	~~69~~70	~~67~~68	35	27	~~24~~32	~~26~~35	3009
Marin	Larkspur	2	37.9	20	122.5	97	68	91	66	89	66	84	64	69	68	34	28	33	35	
Marin	Mill Valley	3	37.9	80	122.6	97	68	91	66	89	66	84	64	70	68	28	28	33	~~36~~35	3400
Marin	Novato	2	38.1	370	122.5	94	64	87	63	85	63	80	61	68	66	30	25	30	32	
Marin	San Anselmo	2	38.0	50	122.0	95	67	89	66	87	66	82	65	~~66~~70	~~64~~68	32	26	~~25~~31	~~28~~33	
Marin	San Rafael	2	38.0	40	122.6	96	67	90	65	88	65	83	63	~~72~~71	~~70~~68	29	30	~~31~~35	~~34~~37	2440
Marin	Tamalpais-Homestead Valley	3	37.9	25		97	68	91	66	89	66	84	64	~~0~~70	~~0~~68	28	28	~~0~~33	~~0~~35	874
Marin	Tiburon	3	37.9	90	122.5	85	66	80	65	78	65	73	63	67	65	12	30	34	36	
Mariposa	Catheys Valley	12	37.4	1000	120.1	102	69	99	68	98	68	94	67	~~79~~72	~~78~~70	38	21	~~31~~27	~~34~~30	
Mariposa	Dudleys	12	37.7	3000	120.1	97	65	94	64	93	64	90	62	~~70~~68	~~68~~66	44	10	~~29~~17	~~22~~32	4959
Mariposa	Yosemite Park Hq	16	37.7	3970		97	63	94	62	93	62	90	60	~~69~~67	~~67~~65	38	11	~~28~~18	~~31~~23	4785
Mendocino	Covelo	2	39.8	1385	123.3	99	67	93	65	91	65	87	63	~~72~~69	~~70~~67	43	15	~~28~~22	~~31~~26	4179
Mendocino	Fort Bragg	1	39.5	80	123.8	75	60	67	59	66	59	62	58	~~64~~62 ~~7~~	~~62~~61 ~~5~~	15	29	~~33~~41 ~~3~~	~~10~~37 ~~18~~	~~44~~24 ~~44~~24 ~~55~~90
Mendocino	Point Arena	1	38.9	100	123.7	76	62	72	60	71	60	67	58	~~70~~63	~~68~~61	19	29	~~29~~32	~~32~~34	4747
Mendocino	Potter Valley PH	2	39.4	1015	123.1	101	68	96	67	94	67	89	65	~~65~~70	~~63~~68	40	20	~~16~~26	~~21~~29	3276
Mendocino	Ukiah	2	39.2	623	123.2	100	70	97	69	96	69	92	68	~~71~~72	~~69~~71	42	22	~~43~~28	~~46~~31	2958
Mendocino	Willits	2	39.4	1350	123.3	95	66	89	65	87	64	82	62	~~73~~68	~~71~~66	38	18	~~29~~24	~~23~~27	
Merced	Atwater	12	37.3	150	120.6	102	72	99	70	98	69	94	67	74	72	38	24	30	34	
Merced	Castle AFB	12	37.4	188	120.6	105	71	101	70	100	70	96	69	~~72~~73	~~70~~71	33	24	~~38~~32 ~~8~~	~~41~~31	2590
Merced	Le Grand	12	37.2	255	120.3	101	70	96	68	95	68	91	66	~~71~~72	~~69~~70	38	23	~~40~~28	~~42~~31	2696
Merced	Livingston	12	37.3	165	120.7	103	72	100	70	99	70	95	68	74	72	39	24	30	34	1244

						Cooling											Heating			
						0.1%		0.5%		1.0%		2.0%								
County	City	Climate Zone	Latitude	Elevation (ft)	Longitude	DB	MCWB	DB	MCWB	DB	MCWB	DB	MCWB	Design Wetbulb 0.1%	Design Wetbulb 0.5%	Outdoor Daily Range	Winter Median of Extremes	Design Drybulb (0.2%)	Design Drybulb (0.6%)	HDD*
Merced	Los Banos	12	37.0	120	120.9	100	70	96	68	94	68	88	67	72	70	42	22	~~41~~28	~~43~~31	2616
Merced	Los Banos Res	12	37.0	407	120.9	101	70	97	68	95	68	89	67	72	70	42	23	~~28~~29	31	
Merced	Merced AP	12	37.3	153	120.6	103	71	100	69	99	69	95	67	~~74~~73	~~72~~71	36	21	~~32~~27	~~35~~30	2653
Merced	San Luis Dam	12	37.1	277	121.1	97	68	91	66	90	66	86	64	~~66~~70	~~64~~68	32	25	~~25~~30	~~28~~33	
Merced	Volta PH	12	40.5	2220	120.9	101	66	98	65	97	65	93	63	~~72~~69	~~70~~67	33	21	~~35~~27	~~37~~30	
Merced	Winton	12	37.4	168	120.6	103	71	100	69	99	69	95	67	73	71	36	21	27	30	1244
Modoc	Adin RS	16	41.2	4195	121.0	96	61	92	60	91	60	88	59	~~70~~65	~~68~~63	43	-7	~~24~~-2	~~27~~4	
Modoc	Alturas RS	16	41.5	4400	120.6	99	62	96	61	95	61	91	59	~~72~~65	~~70~~63	43	-10	~~37~~-4	~~39~~0	6895
Modoc	Cedarville	16	41.5	4670	120.2	97	61	94	60	93	60	89	58	65	63	35	1	~~20~~6	~~24~~13	6304
Modoc	Fort Bidwell	16	41.9	4498	120.1	93	60	90	59	89	59	85	57	~~67~~64	~~65~~62	38	-2	~~38~~3	~~40~~10	6381
Modoc	Jess Valley	16	41.3	5300	120.3	92	59	89	58	88	58	84	56	~~73~~63	~~71~~61	35	-7	~~35~~-2	~~37~~4	7045
Mono	Bodie	16	38.2	8370	119.0	83	50	80	49	79	49	76	48	~~62~~55	~~60~~53	42	-21	~~-13~~-16	~~-10~~-13	
Mono	Bridgeport	16	38.2	6470	119.2	89	56	86	54	85	54	82	53	~~71~~60	~~68~~57	41	-20	~~32~~-15	~~35~~-12	
Mono	Mono Lake	16	38.0	6450	119.2	91	58	88	57	87	57	84	55	~~71~~62	~~69~~60	32	4	~~22~~12	~~26~~17	6518
Mono	Twin Lakes	16	38.7	7829	119.1	73	49	64	47	62	47	57	46	~~73~~53	~~71~~50	30	-7	~~31~~-2	~~34~~4	9196
Mono	White Mtn 1	16	37.5	10150		73	49	69	47	68	47	65	45	~~72~~53	~~70~~50	37	-15	~~30~~-9	~~33~~-65	
Mono	White Mtn 2	16	37.6	12470		61	42	58	41	57	41	54	40	~~53~~46	~~50~~43	38	-20	~~-9~~-15	~~-6~~-12	
Monterey	Camp Roberts	4	35.8	765	120.8	106	72	101	71	99	71	95	69	~~71~~74	~~69~~72	45	16	~~38~~24	~~40~~27	2890
Monterey	Carmel Valley	3	36.5	425	121.7	94	68	88	66	86	66	80	65	~~70~~69	~~68~~67	20	25	~~38~~30	~~40~~33	
Monterey	Carmel-by-the-Sea	3	36.5	20	121.9	87	65	78	62	76	62	71	61	66	63	20	30	35	38	968
Monterey	Castroville	3	36.8	20	121.8	86	66	77	63	75	63	70	61	67	64	18	32	37	40	1151
Monterey	Fort Ord	3	36.7	134	121.8	86	65	77	63	75	62	70	60	~~71~~67	~~69~~64	18	24	~~40~~29	~~42~~32	3818
Monterey	Greenfield	4	36.2	287	121.2	92	67	88	65	87	65	84	64	70	68	32	22	27	30	1020
Monterey	King City	4	36.2	320	121.1	94	67	90	65	89	65	85	64	~~74~~70	~~72~~68	36	20	~~31~~26	~~34~~29	2639
Monterey	Marina	3	36.7	20	121.8	86	66	77	63	75	63	70	61	67	64	18	32	37	40	
Monterey	Monterey AP	3	36.6	245	121.9	86	65	77	62	75	62	70	61	~~76~~62	~~70~~63	20	30	~~37~~35	~~39~~38	3556
Monterey	Monterey CO	3	36.6	345	121.9	87	65	78	62	76	62	71	61	~~72~~66	~~70~~63	20	32	37	~~39~~40	3169
Monterey	Pacific Grove	3	36.7	114	122.0	87	66	78	63	76	63	71	61	67	64	19	31	35	37	
Monterey	Priest Valley	4	36.2	2300	120.7	97	66	93	65	92	65	88	63	~~73~~69	~~71~~67	34	13	~~33~~20	~~35~~24	4144

						Cooling											Heating			
						0.1%		0.5%		1.0%		2.0%								
County	City	Climate Zone	Latitude	Elevation (ft)	Longitude	DB	MCWB	DB	MCWB	DB	MCWB	DB	MCWB	Design Wetbulb 0.1%	Design Wetbulb 0.5%	Outdoor Daily Range	Winter Median of Extremes	Design Drybulb (0.2%)	Design Drybulb (0.6%)	HDD*
Monterey	Prunedale	3	36.6	260	121.7	86	66	83	65	82	64	79	62	68	66	20	26	31	34	1100
Monterey	Salinas 3 E	3	36.7	85	121.6	86	66	83	65	82	64	79	62	~~73~~68	~~71~~66	20	26	~~35~~31	~~37~~34	
Monterey	Salinas AP	3	36.7	69	121.6	85	67	82	65	81	64	78	62	69	66	20	28	33	35	2959
Monterey	San Antonio Mission	4	36.0	1060	117.7	99	69	94	68	92	68	88	67	~~66~~71	~~64~~69	28	19	25	28	
Monterey	Seaside	4	36.6	17	122.9	85	66	79	64	77	64	73	62	67	65	20	30	35	37	
Monterey	Soledad	3	36.4	200	121.3	90	67	87	65	86	65	82	64	70	67	23	24	29	32	1020
Napa	American Canyon	2	37.6	85	122.3	93	67	90	66	88	66	84	64	70	68	23	28	33	36	
Napa	Angwin	2	38.6	1815	122.4	98	66	93	64	92	64	88	62	~~72~~69	~~70~~66	33	25	~~31~~30	~~34~~33	
Napa	Berryessa Lake	2	38.6	480	122.1	102	70	98	69	96	69	92	67	72	70	35	26	31	34	
Napa	Duttons Landing	2	38.2	20	122.3	96	68	91	66	89	66	84	64	~~68~~70	~~66~~68	31	26	~~17~~31	~~22~~34	
Napa	Markley Cove	2	38.5	480	122.1	104	70	99	69	97	69	93	67	~~71~~72	~~69~~70	39	23	~~42~~32 9	~~45~~31	
Napa	Napa State Hospital	2	37.3	60	122.3	94	67	91	67	90	67	86	66	~~70~~71	~~68~~70	29	26	~~28~~31	~~31~~34	2749
Napa	Saint Helena	2	38.5	225	122.5	102	70	98	69	97	69	93	67	~~73~~72	~~71~~70	40	22	~~35~~28	~~37~~31	2878
Nevada	Boca	16	39.4	5575	120.1	92	58	89	57	88	57	84	55	~~80~~62	~~78~~60	46	-18	~~29~~-13	~~32~~-10	8340
Nevada	Deer Creek PH	16	39.3	4455	120.9	93	61	91	60	90	60	87	58	~~64~~65	~~62~~63	39	10	~~2~~17	~~8~~22	5863
Nevada	Grass Valley	11	39.2	2400	121.1	99	67	96	65	95	65	91	63	~~59~~68 9	~~57~~67	29	19	~~14~~25	~~19~~28	
Nevada	Lake Spaulding	16	39.3	5156	120.6	89	58	86	57	85	57	83	55	~~72~~62	~~70~~60	34	3	~~17~~11	~~20~~16	6447
Nevada	Nevada City	11	39.3	2600	121.0	97	66	94	64	92	64	88	63	~~77~~68	~~75~~66	41	14	~~32~~21	~~35~~25	4900
Nevada	Truckee RS	16	39.3	5995	120.2	90	58	87	57	86	57	82	55	~~76~~62	~~73~~60	40	-10	~~24~~-4	~~27~~0	8230
Nevada/Placer	Donner Mem Stt Pk	16	39.3	5937	120.3	85	56	82	56	81	56	77	54	~~72~~60	~~70~~58	40	-3	~~29~~3	~~32~~6	
Orange	Aliso Viejo	8	33.6	50	117.7	91	69	83	68	81	68	76	66	71	69	18	30	33	36	
Orange	Anaheim	8	33.8	158	117.9	99	69	92	68	90	68	85	67	73	71	26	32	37	39	
Orange	Brea Dam	8	33.9	275	117.9	100	69	94	68	92	68	86	66	~~81~~73	~~79~~71	29	30	~~30~~34	~~33~~37	
Orange	Buena Park	8	33.9	75	118.0	98	69	92	68	90	68	85	67	72	70	25	31	35	38	
Orange	Costa Mesa	6	33.7	100	117.9	88	68	81	66	79	66	73	65	~~73~~70	~~71~~68	16	31	~~28~~36	~~31~~38	1482
Orange	Cypress	8	33.8	75	118.0	98	70	92	69	90	69	85	67	72	70	24	31	35	38	
Orange	Dana Point	6	33.5	100	117.7	91	69	84	68	82	68	78	66	71	69	13	30	33	36	600
Orange	El Toro MCAS	8	33.7	380	117.7	96	69	89	69	87	69	82	68	~~69~~73	~~67~~71	26	34	~~35~~38	~~38~~41	1591

						Cooling											Heating			
						0.1%		0.5%		1.0%		2.0%								
County	City	Climate Zone	Latitude	Elevation (ft)	Longitude	DB	MCWB	DB	MCWB	DB	MCWB	DB	MCWB	Design Wetbulb 0.1%	Design Wetbulb 0.5%	Outdoor Daily Range	Winter Median of Extremes	Design Drybulb (0.2%)	Design Drybulb (0.6%)	HDD*
Orange	El Toro Station	8	33.7	380		96	69	89	69	87	69	82	68	73	71	26	34	38	41	560
Orange	Fountain Valley	6	33.7	60	118.0	97	70	90	68	88	68	84	67	72	70	18	33	38	40	
Orange	Fullerton	8	33.9	340	117.9	100	70	94	69	92	69	87	68	73	71	26	30	35	37	
Orange	Garden Grove	8	33.6	85	117.9	98	70	91	68	89	68	84	67	72	70	23	31	36	38	
Orange	Huntington Beach	6	33.7	40	117.8	91	69	83	67	81	67	76	66	71	69	14	34	38	41	
Orange	Irvine	8	33.7	50	118.0	96	69	88	68	86	68	82	67	72	70	27	33	37	40	
Orange	John Wayne AP	6	33.6	115		98	70	91	68	89	68	84	67	~~63~~72	~~61~~70	26	33	~~-2~~37	4~~3~~9	1496
Orange	La Habra	9	33.9	305	118.0	100	69	94	68	92	68	87	67	72	70	27	30	35	37	
Orange	La Palma	8	33.9	75	118.0	98	69	92	68	90	68	85	67	72	70	25	31	35	38	
Orange	Laguna Beach	6	33.5	35	117.8	91	69	83	68	81	68	76	66	71	69	18	30	~~29~~33	~~32~~36	2222
Orange	Laguna Niguel	6	33.6	500	117.7	95	67	87	66	85	65	81	63	71	67	22	33	37	40	
Orange	Los Alamitos NAS	8	33.8	30	118.1	98	71	89	69	87	69	83	68	~~74~~73	~~72~~71	23	32	~~27~~37	~~30~~39	1740
Orange	Mission Viejo	8	33.6	350	118.0	95	67	87	66	85	65	81	63	71	67	22	33	37	40	
Orange	Newport Beach	6	33.6	10	117.9	87	68	80	66	78	66	72	65	~~73~~70	~~71~~68	12	34	~~28~~39	~~31~~41	1952
Orange	Orange	8	33.6	194	118.0	99	70	92	68	90	68	85	67	72	70	27	33	37	40	
Orange	Placentia	8	33.9	323	118.0	101	69	93	68	91	68	87	67	73	71	28	30	34	37	
Orange	Rancho Santa Margarita	8	33.6	116		95	67	87	66	85	65	81	63	71	~~69~~67	22	33	~~38~~37	~~41~~40	496
Orange	Rossmoor	8	33.8	20	118.1	92	67	85	64	83	64	79	62	71	69	19	32	37	39	
Orange	San Clemente	6	33.4	208	118.6	91	68	85	67	84	67	80	66	~~66~~71	~~64~~69	12	31	~~25~~35	~~28~~37	
Orange	Santa Ana FS	8	33.8	115	117.8	98	70	91	68	89	68	84	67	~~70~~72	~~68~~70	26	33	~~29~~35	~~32~~38	1430
Orange	Seal Beach	6	33.8	21	118.1	94	69	86	68	84	67	80	65	~~69~~71	~~67~~69	15	35	~~32~~40	~~35~~42	1519
Orange	South Laguna	6	33.6	100	117.7	91	69	83	68	82	68	78	66	71	69	18	30	33	36	586
Orange	Stanton	8	33.6	45	118.0	98	69	91	68	89	68	84	67	72	70	24	31	36	38	
Orange	Tustin Foothills	8	33.8	500		99	71	92	69	90	69	85	68	73	71	27	28	31	34	550
Orange	Tustin Irvine Rch	8	33.7	118	117.8	99	71	92	69	90	69	85	68	73	71	27	28	31	34	1856
Orange	Villa Park	8	33.8	300	117.8	99	70	92	68	90	68	85	67	72	70	27	33	37	40	550
Orange	Westminster	6	33.8	38	118.0	95	70	88	68	86	68	81	67	72	70	23	33	38	41	
Orange	Yorba Linda	8	33.9	350	117.8	102	70	94	69	92	69	88	68	~~69~~73	~~67~~71	31	30	~~28~~35	~~31~~37	1643
Placer	Auburn	11	38.9	1292	121.1	103	69	100	67	99	67	95	66	~~71~~72	69	33	25	~~27~~30	~~30~~33	3089

						Cooling											Heating			
						0.1%		0.5%		1.0%		2.0%								
County	City	Climate Zone	Latitude	Elevation (ft)	Longitude	DB	MCWB	DB	MCWB	DB	MCWB	DB	MCWB	Design Wetbulb 0.1%	Design Wetbulb 0.5%	Outdoor Daily Range	Winter Median of Extremes	Design Drybulb (0.2%)	Design Drybulb (0.6%)	HDD*
Placer	Blue Canyon AP	16	39.3	5280	120.7	88	60	85	59	84	59	81	57	~~75~~64	~~73~~62	20	13	~~35~~20	~~38~~24	5704
Placer	Bowman Dam	11	39.4	5347	120.7	89	59	86	57	85	57	82	55	~~69~~63	~~67~~60	26	9	~~30~~17	~~33~~22	5964
Placer	Colfax	11	39.1	2418	121.0	100	66	97	65	96	65	92	63	~~74~~69	~~72~~67	29	22	~~33~~28	~~35~~31	3424
Placer	Donner Summit	16	39.4	7239	120.3	80	53	77	53	76	52	72	50	~~60~~57	~~58~~55	40	-8	~~3~~-1	~~6~~3	8290
Placer	Loomis	11	38.8	408	121.2	107	71	103	70	102	70	98	69	74	72	39	21	27	30	
Placer	North Auburn	11	38.9	1300		103	69	100	67	99	67	95	66	72	69	33	25	30	33	1518
Placer	Rocklin	11	38.8	239	121.2	108	72	104	70	103	70	99	69	74	72	39	20	~~32~~26	~~35~~29	3143
Placer	Roseville	11	38.7	160	121.2	105	71	102	70	100	70	96	68	74	71	36	24	30	34	
Placer	Squaw Valley	16	39.2	6235	120.2	88	57	85	56	84	56	80	54	~~71~~61	~~69~~59	40	-10	~~38~~-4	~~41~~0	
Placer	Tahoe City	16	39.2	6230	120.1	84	56	81	55	80	55	76	53	~~74~~60	~~72~~58	36	2	~~31~~7	~~35~~14	8085
Placer	Tahoe Valley AP	16	38.9	6254		85	56	82	55	81	55	77	53	60	58	38	-5	~~7~~2	~~14~~6	
Plumas	Canyon Dam	16	40.1	4555	121.1	93	60	90	59	89	59	85	57	~~74~~64	~~73~~62	39	1	~~19~~6	~~24~~13	6834
Plumas	Chester	16	40.3	4525	121.2	94	62	91	61	90	61	86	59	~~72~~65	~~70~~63	33	-3	~~31~~2	~~34~~8	
Plumas	Portola	16	39.8	4850	120.5	92	63	89	61	88	61	84	59	~~74~~65	~~72~~63	48	-9	~~30~~-3	~~33~~1	7111
Plumas	Quincy	16	39.9	3409	120.9	101	64	98	63	97	63	93	62	~~72~~68	~~70~~66	45	1	~~17~~6	~~20~~13	5763
Plumas	Turntable Creek	16	40.8	1067		105	69	101	68	99	68	95	66	72	70	28	24	29	32	
Riverside	Banning	15	33.9	2349	116.9	104	69	100	68	99	68	96	67	73	71	34	20	26	30	
Riverside	Beaumont	10	33.9	2605	117.0	103	68	99	67	98	67	95	66	~~74~~72	~~72~~70	38	22	~~28~~27	30	2628
Riverside	Blythe AP	15	33.6	395	114.7	115	74	112	73	111	73	108	71	~~64~~80	~~62~~78	27	28	~~20~~33	~~24~~36	1219
Riverside	Blythe CO	15	33.6	268	114.6	115	74	112	73	111	73	108	71	80	78	27	24	~~33~~29	~~36~~32	1312
Riverside	Canyon Lake	10	33.8	1500	117.3	105	70	101	69	100	69	97	68	74	72	39	22	27	30	
Riverside	Cathedral City	15	33.8	400	116.5	117	74	113	73	112	73	109	72	79	78	33	26	31	34	374
Riverside	Coachella	15	33.7	-76	116.2	114	74	110	73	109	73	106	73	~~74~~80	~~72~~79	28	25	~~33~~30	~~35~~34	
Riverside	Corona	10	33.9	710	117.6	104	70	100	69	98	69	92	67	~~73~~74	~~71~~72	35	26	~~28~~31	~~31~~34	1794
Riverside	Desert Hot Springs	15	34.0	1060	116.5	115	73	111	72	110	72	107	71	78	77	35	24	29	32	400
Riverside	Eagle Mtn	14	33.8	973	115.5	113	72	110	71	109	71	105	69	~~70~~77	~~68~~75	24	32	~~31~~37	~~34~~39	1138
Riverside	East Hemet	10	33.7	1655		109	70	104	69	103	69	101	67	74	72	40	20	25	28	
Riverside	Elsinore	10	33.7	1285	117.3	105	71	101	70	100	70	98	69	~~67~~74	~~65~~72	39	22	26~~23~~	~~27~~29	2128
Riverside	Glen Avon	10	34.0	827	117.5	105	70	101	69	99	69	95	67	~~72~~74	~~69~~72	35	28	~~28~~33	~~31~~35	

						Cooling											Heating			
						0.1%		0.5%		1.0%		2.0%								
County	City	Climate Zone	Latitude	Elevation (ft)	Longitude	DB	MCWB	DB	MCWB	DB	MCWB	DB	MCWB	Design Wetbulb 0.1%	Design Wetbulb 0.5%	Outdoor Daily Range	Winter Median of Extremes	Design Drybulb (0.2%)	Design Drybulb (0.6%)	HDD*
Riverside	Hayfield Pumps	14	33.7	1370	115.6	112	71	108	70	107	70	104	68	~~71~~77	~~69~~75	31	24	~~40~~29	~~42~~32	1529
Riverside	Hemet	10	33.7	1655	117.0	109	70	104	69	103	69	101	67	74	72	40	20	25	28	
Riverside	Home Gardens	10	33.9	678	117.5	104	70	100	69	98	69	92	67	74	72	35	26	31	34	
Riverside	Idyllwild	16	33.7	5397	116.7	93	62	89	61	88	61	84	60	~~68~~67	~~66~~65	35	9	~~29~~16	~~32~~21	
Riverside	Indio	15	33.7	11	116.3	115	75	112	75	111	75	107	74	~~65~~81	~~63~~79	30	24	~~19~~29	~~24~~32	1059
Riverside	La Quinta	15	33.8	400	116.3	116	74	112	73	111	73	108	72	79	78	34	26	32	34	332
Riverside	Lake Elsinore	10	33.7	1233	117.3	105	70	101	69	100	69	97	68	74	72	39	22	27	30	827
Riverside	Lakeland Village	10	33.6	1233	117.3	105	70	101	69	100	69	97	68	74	72	39	12	27	30	827
Riverside	March AFB	10	33.9	1511	117.3	103	70	99	68	98	67	94	65	~~61~~74	~~59~~71	34	23	~~2~~30	~~8~~33	2089
Riverside	Mecca FS	15	33.6	-180	116.1	115	75	111	75	110	75	107	74	~~61~~81	~~60~~79	30	24	~~31~~29	~~33~~32	1185
Riverside	Mira Loma	10	34.0	700	117.5	105	70	101	69	99	68	95	66	74	72	34	25	33	36	600
Riverside	Moreno Valley	10	33.9	1600	117.2	103	70	99	68	98	67	94	65	74	71	34	27	30	33	611
Riverside	Mount San Jacinto	16	33.8	8417	116.6	82	56	77	55	76	55	73	53	~~63~~61	~~61~~59	35	-1	~~-~~4	~~0~~11	
Riverside	Norco	10	33.9	700	117.0	103	70	99	69	98	69	94	67	74	72	34	27	32	35	
Riverside	Palm Desert	15	33.7	200	116.5	116	74	112	73	111	73	108	72	79	78	34	26	32	34	
Riverside	Palm Desert Country	15	33.7	243		116	74	112	73	111	73	108	72	79	78	34	26	32	34	374
Riverside	Palm Springs	15	33.8	411	116.5	117	74	113	73	112	73	109	72	79	78	35	26	~~32~~31	34	1109
Riverside	Pedley	10	34.0	718	117.5	105	70	101	69	99	68	95	66	74	72	34	26	33	36	600
Riverside	Perris	10	33.8	1470	117.2	105	70	101	69	100	69	97	68	~~70~~74	~~68~~72	39	22	~~44~~27	~~46~~30	
Riverside	Rancho Mirage	15	33.8	248	116.4	117	74	113	73	112	73	109	72	79	78	33	26	31	34	374
Riverside	Riverside Exp Sta	10	34.0	986	117.4	106	71	102	69	101	69	97	67	75	72	36	29	~~30~~34	~~33~~36	
Riverside	Riverside FS 3	10	34.0	840	117.4	104	70	100	69	99	68	95	65	~~75~~74	72	37	27	~~34~~32	~~36~~35	1818
Riverside	Rubidoux	10	34.0	792	117.0	106	71	102	70	101	70	97	68	75	73	36	27	32	35	
Riverside	San Jacinto	10	33.8	1535	117.0	110	70	105	69	104	69	102	68	~~66~~75	~~64~~73	41	20	~~25~~26	~~28~~29	2376
Riverside	Sun City	10	33.7	1420	117.2	105	70	101	69	100	69	97	68	~~73~~74	~~70~~72	39	22	~~29~~27	~~32~~30	827
Riverside	Temecula	10	33.5	1006	117.2	101	69	96	68	95	68	91	67	73	71	34	24	29	32	
Riverside	Thermal AP	15	33.6	-112	116.1	114	74	110	74	109	74	106	74	~~64~~80	~~62~~79	29	26	~~-11~~31	~~-4~~35	1154
Riverside	Valle Vista	10	33.8	1655	116.9	109	70	104	69	103	69	101	67	74	72	40	20	25	28	
Riverside	Wildomar	10	33.6	1255	117.3	103	70	99	69	98	69	94	68	74	72	36	23	28	30	8278 ~~27~~

						Cooling											Heating			
						0.1%		0.5%		1.0%		2.0%								
County	City	Climate Zone	Latitude	Elevation (ft)	Longitude	DB	MCWB	DB	MCWB	DB	MCWB	DB	MCWB	Design Wetbulb 0.1%	Design Wetbulb 0.5%	Outdoor Daily Range	Winter Median of Extremes	Design Drybulb (0.2%)	Design Drybulb (0.6%)	HDD*
Riverside	Woodcrest	10	33.9	1500	117.4	104	70	100	69	99	68	95	65	74	72	37	27	32	35	611
Sacramento	Arden	12	38.5	80		104	70	100	69	98	69	94	67	73	71	35	28	33	35	
Sacramento	Brannan Island	12	38.1	30	121.7	100	69	95	68	93	68	89	67	72	70	10	24	28	31	
Sacramento	Carmichael	12	38.6	100	121.5	104	70	100	69	98	69	94	68	73	71	35	25	35	37	1290
Sacramento	Citrus Heights	12	38.7	138	121.5	104	71	100	70	98	70	94	68	74	72	36	24	26	29	
Sacramento	Elk Grove	12	38.4	50	121.4	104	71	100	69	98	69	94	68	73	71	35	29	34	36	1150
Sacramento	Fair Oaks	12	38.7	50	121.3	104	70	100	69	98	69	94	69	72	71	36	23	29	33	
Sacramento	Florin	12	38.5	100	121.4	104	71	100	69	98	69	94	68	73	71	35	29	34	36	
Sacramento	Folsom Dam	12	38.7	350	121.2	104	70	101	69	99	69	95	67	~~73~~72	71	36	25	~~34~~31	~~36~~35	
Sacramento	Foothill Farms	12	38.6	90	121.3	104	71	100	70	98	70	94	68	73	71	36	24	30	34	
Sacramento	Galt	12	38.2	40	121.3	101	70	97	68	95	68	91	67	72	70	38	23	28	31	1240
Sacramento	La Riviera	12	38.6	190		104	71	100	70	98	70	94	68	73	71	32	30	35	37	1025
Sacramento	Mather AFB	12	38.6	96	121.3	104	71	100	70	98	70	94	68	~~74~~73	~~72~~71	35	28	~~32~~33	35	
Sacramento	McClellan AFB	12	38.7	86	121.4	105	71	102	70	100	70	96	68	~~72~~74	~~70~~71	35	23	~~38~~28	~~41~~21	2566
Sacramento	North Highlands	12	38.6	45	121.4	104	71	100	69	98	69	94	67	~~69~~73	~~67~~71	35	23	~~22~~28	~~26~~31	2566
Sacramento	Orangevale	12	38.7	140	121.2	105	72	102	70	100	70	96	68	74	71	36	24	30	34	
Sacramento	Parkway-South Sacramento	12	38.5	17		104	71	100	70	98	70	94	68	73	71	32	30	35	37	1150
Sacramento	Rancho Cordova	12	38.6	190	121.3	104	72	100	69	98	69	94	68	74	71	35	26	31	33	
Sacramento	Rio Linda	12	38.6	86	121.5	104	72	100	70	98	70	94	68	74	71	32	28	33	35	1290
Sacramento	Rosemont	12	38.3	190	121.4	104	71	100	70	98	70	94	68	73	71	32	30	35	37	1025
Sacramento	Sacramento AP	12	38.5	17	121.5	104	72	100	70	98	70	94	68	~~75~~74	~~73~~71	35	26	~~32~~31	~~35~~33	2843
Sacramento	Sacramento CO	12	38.6	84	121.5	104	71	100	70	98	70	94	68	~~74~~73	71	32	30	~~31~~35	~~33~~37	
Sacramento	Walnut Grove	12	38.2	23	121.5	102	70	98	69	96	69	92	68	~~71~~72	~~69~~71	37	24	~~29~~30	~~31~~32	
San Benito	Hollister	4	36.9	280	121.4	96	68	89	67	87	67	81	65	~~68~~70	~~66~~68	30	21	~~35~~27	~~37~~30	2725
San Benito	Idria	4	36.4	2650	120.7	97	66	92	65	91	64	87	62	~~72~~68	~~71~~66	27	24	~~30~~29	32	3128
San Berardino	Mitchell Caverns	14	34.9	4350		102	64	98	63	97	63	94	61	~~71~~69	~~67~~67	29	21	~~37~~27	~~40~~30	
San Bernadino	Redlands	10	34.1	1318	117.2	106	70	102	69	101	69	98	67	~~72~~74	~~70~~72	34	27	~~31~~32	~~34~~35	1993
San Bernardino	Adelanto	14	34.6	2865	117.4	105	67	101	65	100	64	97	62	70	68	39	14	24	27	1654
San Bernardino	Apple Valley	14	34.5	2935	117.2	105	66	101	65	100	65	97	64	70	68	38	14	21	25	

						Cooling											Heating			
						0.1%		0.5%		1.0%		2.0%								
County	City	Climate Zone	Latitude	Elevation (ft)	Longitude	DB	MCWB	DB	MCWB	DB	MCWB	DB	MCWB	Design Wetbulb 0.1%	Design Wetbulb 0.5%	Outdoor Daily Range	Winter Median of Extremes	Design Drybulb (0.2%)	Design Drybulb (0.6%)	HDD*
San Bernardino	Baker	14	35.3	940	116.1	115	73	112	72	111	72	108	70	~~74~~77	~~72~~75	29	23	~~36~~28	~~38~~31	
San Bernardino	Balch PH	14	36.9	1720		100	67	97	66	96	66	93	64	~~74~~71	~~72~~69	26	26	31	~~35~~34	
San Bernardino	Barstow	14	34.9	2162	117.0	107	69	104	69	103	69	100	67	~~73~~74	~~71~~72	35	16	~~26~~23	~~28~~27	2580
San Bernardino	Big Bear Lake	16	34.2	6745	116.9	87	59	83	58	82	58	79	56	~~70~~64	~~68~~62	32	-3	~~25~~3	~~28~~7	6850
San Bernardino	Bloomington	10	34.0	980	117.4	106	71	102	70	101	70	98	69	75	73	34	30	35	38	
San Bernardino	Chino	10	34.0	714	117.7	104	70	100	69	98	69	94	68	~~72~~74	~~70~~72	35	27	~~31~~32	~~34~~35	
San Bernardino	Chino Hills	10	34.1	800	117.7	104	70	100	69	98	69	94	68	74	72	35	27	32	35	800
San Bernardino	Colton	10	34.1	978	117.3	105	70	102	68	101	68	97	67	74	72	35	28	33	~~35~~36	
San Bernardino	Crestline	16	34.2	4900	117.3	90	62	86	61	85	61	81	59	66	64	26	13	20	24	3200
San Bernardino	Cucamonga	10	34.1	1450	117.6	103	69	99	68	97	67	93	65	~~66~~73	~~64~~71	31	29	~~20~~34	~~24~~36	
San Bernardino	Daggett AP	14	34.9	1915	116.8	109	68	106	68	105	68	102	66	~~72~~73	~~70~~72	33	21	~~35~~26	~~38~~29	2203
San Bernardino	El Mirage	14	34.6	2910	117.6	105	69	101	68	100	68	97	66	72	~~71~~70	31	9	~~30~~16	~~34~~21	
San Bernardino	Fontana	10	34.1	1090	117.4	105	70	101	69	100	69	97	67	~~72~~74	~~71~~72	33	30	~~31~~35	~~35~~38	1530
San Bernardino	George AFB	14	34.6	2875	117.4	105	67	102	65	101	64	98	62	~~71~~70	~~69~~68	31	19	~~37~~23	~~39~~26	2887
San Bernardino	Grand Terrace	10	34.1	1000	117.3	105	70	102	68	101	68	97	67	74	72	35	28	33	36	611
San Bernardino	Hesperia	14	34.4	3191	117.3	105	67	101	65	100	65	97	63	70	68	38	14	21	25	1654
San Bernardino	Highland	10	34.1	1315	117.2	106	70	102	69	101	69	97	68	74	72	36	26	31	34	
San Bernardino	Lake Arrowhead	16	34.2	5205	117.2	90	62	86	61	85	61	81	59	~~71~~66	~~67~~64	26	13	~~37~~20	~~40~~24	5310
San Bernardino	Loma Linda	10	34.0	1150	117.5	106	70	103	69	102	69	99	67	74	72	36	27	32	35	
San Bernardino	Los Serranos	10	34.1	714	117.7	104	70	100	69	98	69	94	68	74	72	35	27	32	35	706
San Bernardino	Lucerne Valley	14	34.5	2957	117.0	105	67	101	66	100	66	98	64	~~64~~71	~~62~~69	38	12	~~35~~19	~~37~~24	
San Bernardino	Mentone	10	34.1	1700	117.1	106	70	102	69	101	69	98	67	74	72	34	27	32	35	741
San Bernardino	Montclair	10	34.0	1220	117.0	104	69	100	68	98	68	94	66	73	71	35	28	33	35	
San Bernardino	Mount Baldy Notch	16	34.3	7735	117.6	80	58	76	57	75	56	71	54	61	59	32	4	10	14	
San Bernardino	Mountain Pass	14	35.5	4730	115.5	100	65	96	64	95	64	92	63	~~66~~68	~~64~~66	29	11	~~22~~18	~~26~~23	
San Bernardino	Muscoy	10	34.2	1400	117.3	105	71	101	69	100	68	96	66	75	72	37	26	31	34	614
San Bernardino	Needles AP	15	34.8	913	114.6	117	73	114	72	113	72	110	71	~~71~~77	~~69~~75	26	27	~~40~~32	~~42~~35	1391
San Bernardino	Ontario AP	10	34.0	934	117.0	105	70	101	69	99	68	95	66	74	72	34	26	~~32~~33	~~35~~36	1710
San Bernardino	Parker Res	15	34.3	738	114.2	115	74	112	73	111	73	108	72	~~72~~79	~~70~~77	26	32	37	40	1223

						Cooling											Heating			
						0.1%		0.5%		1.0%		2.0%								
County	City	Climate Zone	Latitude	Elevation (ft)	Longitude	DB	MCWB	DB	MCWB	DB	MCWB	DB	MCWB	Design Wetbulb 0.1%	Design Wetbulb 0.5%	Outdoor Daily Range	Winter Median of Extremes	Design Drybulb (0.2%)	Design Drybulb (0.6%)	HDD*
San Bernardino	Pinnacles NM	14	36.5	1307	121.2	98	68	94	67	93	66	89	64	70	68	45	20	~~33~~26	~~36~~29	2956
San Bernardino	Rialto	10	34.1	1254	117.0	105	70	101	69	100	68	96	66	74	72	35	28	33	35	
San Bernardino	San Bernardino	10	34.1	1125	117.3	106	70	102	69	101	69	98	68	~~66~~75	~~64~~72	39	27	~~25~~31	~~28~~33	1777
San Bernardino	Squirrel Inn	14	34.2	5680	117.2	86	61	82	60	81	60	77	58	65	63	23	12	18	22	5175
San Bernardino	Trona	14	35.8	1695	117.4	113	72	109	70	108	70	105	68	~~68~~76	~~66~~73	35	18	24	~~28~~27	2415
San Bernardino	Twentynine Palms	14	34.1	1975	116.1	110	71	107	70	106	70	103	69	~~73~~76	~~71~~74	31	21	~~31~~26	~~34~~29	1973
San Bernardino	Upland	10	34.1	1605	117.7	102	69	98	68	96	68	92	66	~~69~~73	~~67~~71	31	29	~~30~~34	~~33~~36	2175
San Bernardino	Victorville Pumps	14	34.5	2858		105	67	101	65	100	64	97	62	70	68	39	14	~~34~~24	~~36~~27	3191
San Bernardino	Yucaipa	10	34.0	2600	117.0	106	68	102	67	101	67	98	65	73	71	35	27	32	35	
San Bernardino	Yucca Valley	14	34.2	2600	116.4	108	71	105	70	104	70	101	69	75	73	32	19	24	27	862
San Bernardino/Kern	China Lake	14	35.7	2220	117.7	112	70	108	68	107	68	104	68	~~72~~74	~~70~~72	33	15	~~31~~22	~~34~~25	2560
San Diego	Alpine	10	32.8	1735	116.8	99	69	95	68	94	68	91	67	~~71~~72	~~69~~70	35	27	~~40~~32	~~42~~35	
San Diego	Barrett Dam	10	32.7	1623	116.7	103	69	97	68	96	68	92	67	73	71	35	22	26	~~30~~28	2656
San Diego	Borrego Desert PK	15	33.2	805	116.4	112	76	107	74	105	74	101	72	~~73~~79	~~71~~77	36	25	~~23~~30	~~26~~33	
San Diego	Bostonia	10	32.8	600	116.9	96	70	91	69	88	69	81	67	72	70	30	29	34	36	
San Diego	Cabrillo NM	7	32.7	410	117.2	89	69	84	68	83	68	80	67	71	69	12	39	43	45	
San Diego	Camp Pendleton	10	33.4	50	117.4	88	69	85	68	84	68	80	67	71	69	12	34	38	40	
San Diego	Campo	14	32.6	2630	116.5	101	67	95	66	94	66	90	66	71	~~68~~69	41	16	~~33~~23	~~36~~27	3303
San Diego	Cardiff-by-the-Sea	7	33.0	80	117.3	87	68	83	67	81	67	77	65	70	68	12	35	39	41	
San Diego	Carlsbad	7	33.2	44	117.4	87	68	83	67	81	67	77	65	70	68	10	34	38	40	
San Diego	Casa de Oro-Mount Helix	10	32.7	530		96	71	88	69	87	69	84	67	~~71~~72	~~69~~70	19	34	38	~~40~~41	404
San Diego	Chula Vista	7	32.6	9	117.1	90	70	84	68	83	68	79	66	~~74~~71	~~72~~69	9	33	~~28~~38	~~31~~40	2072
San Diego	Coronado	7	32.7	20	117.2	89	69	82	67	80	67	76	65	~~73~~70	~~71~~68	10	36	~~28~~39	~~31~~41	1500
San Diego	Cuyamaca	7	33.0	4650	116.6	92	64	85	62	84	61	81	59	~~72~~67	~~70~~65	29	11	~~20~~18	~~24~~23	4848
San Diego	El Cajon	10	32.7	525	117.0	96	70	91	69	90	69	87	67	72	70	30	29	34	36	
San Diego	El Capitan Dam	14	32.9	600	116.8	105	71	98	70	97	70	93	68	~~72~~74	~~70~~72	35	29	34	36	1533
San Diego	Encinitas	7	33.0	50	117.3	87	68	83	67	81	67	77	65	70	68	10	35	39	41	
San Diego	Escondido	10	33.1	660	117.1	97	69	90	68	88	68	84	67	72	70	29	26	31	34	2005

						Cooling											Heating			
						0.1%		0.5%		1.0%		2.0%								
County	City	Climate Zone	Latitude	Elevation (ft)	Longitude	DB	MCWB	DB	MCWB	DB	MCWB	DB	MCWB	Design Wetbulb 0.1%	Design Wetbulb 0.5%	Outdoor Daily Range	Winter Median of Extremes	Design Drybulb (0.2%)	Design Drybulb (0.6%)	HDD*
San Diego	Fallbrook	10	33.6	660	117.3	94	68	89	67	88	67	85	66	~~70~~71	~~68~~69	29	26	~~18~~31	~~23~~34	2077
San Diego	Fort MacArthur	7	33.7	200	118.3	92	69	84	68	82	68	78	66	~~67~~71	~~65~~69	13	35	~~13~~40	~~18~~42	1819
San Diego	Grossmont	7	32.7	530	117.0	96	69	89	68	88	68	84	66	71	69	23	31	36	38	
San Diego	Henshaw Dam	10	33.2	2700		99	68	94	67	93	67	90	66	~~74~~71	~~72~~69	38	15	~~25~~22	~~28~~26	3708
San Diego	Imperial Beach	7	32.5	23	117.1	87	69	82	68	81	68	78	67	~~81~~71	~~79~~69	10	35	~~31~~39	~~34~~41	1839
San Diego	Julian Wynola	14	33.1	3650	116.8	96	66	91	64	90	64	87	62	~~72~~69	~~70~~67	39	20	~~37~~24	~~39~~26	4049
San Diego	La Mesa	7	32.8	530	117.0	94	70	88	69	87	69	84	67	72	70	23	34	~~35~~39	~~37~~41	1567
San Diego	Lakeside	10	32.8	690	117.0	95	69	90	68	89	68	86	66	72	70	20	26	31	34	
San Diego	Lemon Grove	7	32.7	437	117.2	96	71	88	69	87	69	84	67	72	70	19	34	38	41	
San Diego	Miramar AFS	7	32.9	477	117.1	97	69	91	68	90	68	86	67	~~74~~72	~~72~~70	22	32	~~33~~36	~~36~~38	1532
San Diego	National City	7	32.7	34	117.0	87	70	82	68	81	68	78	66	71	69	10	36	40	42	
San Diego	Oceanside	7	33.2	10	117.4	84	69	80	67	78	67	74	65	~~67~~70	~~65~~68	10	33	37~~34~~	~~37~~39	
San Diego	Otay-Castle Pk	7	32.6	500	117.0	87	68	81	66	79	65	74	63	69	67	10	33	38	40	
San Diego	Palomar Obsy	14	33.4	5545	116.9	90	62	85	61	84	61	80	59	~~68~~66	~~66~~64	22	16	~~31~~20	~~34~~23	4141
San Diego	Pendleton MCB	7	33.3	63	117.3	92	68	87	67	85	67	81	66	~~74~~71	~~72~~69	22	34	~~33~~39	~~36~~41	1532
San Diego	Pendleton MCB Coast	7	33.2	24	117.4	84	69	80	67	79	67	75	65	~~71~~70	~~69~~68	10	39	~~39~~44	~~41~~46	1782
San Diego	Poway Valley	10	33.0	500	117.0	100	70	94	69	93	69	89	68	73	71	26	29	33	35	
San Diego	Ramona Spaulding	10	33.1	1480	116.8	103	70	97	69	96	69	92	68	~~68~~73	~~66~~71	40	22	~~6~~28	~~13~~31	
San Diego	Rancho Bernardo	10	33.0	500	117.1	96	69	91	68	89	68	85	67	72	70	26	29	34	36	
San Diego	Rancho San Diego	10	32.8	300		94	69	86	68	85	68	82	66	71	69	30	34	38	41	404
San Diego	San Diego AP	7	32.7	13	117.2	88	70	83	69	82	69	78	68	~~66~~72	~~67~~04	13	38	~~25~~42	~~28~~44	1507
San Diego	San Marcos	10	33.1	567	117.2	97	69	98	68	94	68	84	67	72	70	29	26	31	34	662
San Diego	Santee	10	32.8	400	117.0	96	69	91	68	90	68	87	67	72	70	20	25	30	33	
San Diego	Solana Beach	7	33.0	15	117.3	87	68	83	67	81	67	77	65	70	68	10	35	39	41	
San Diego	Spring Valley	10	32.7	300	117.0	94	69	86	68	85	68	82	66	71	69	30	34	38	41	
San Diego	Vista	7	33.2	510	117.2	96	69	90	68	89	68	85	67	~~73~~72	~~72~~70	16	30	~~30~~35	~~33~~37	
San Diego	Warner Springs	14	33.3	3180	116.6	100	67	95	66	94	66	91	65	71	69	40	15	~~42~~22	~~44~~26	3591
San Francisco	San Francisco AP	3	37.6	8	122.4	89	66	83	64	80	63	74	61	~~66~~67	~~64~~64	20	31	~~25~~35	~~28~~38 ~~7~~	3042
San Francisco	San Francisco CO	3	37.8	52	122.4	84	65	79	63	77	62	71	60	66	~~64~~63	14	38	~~25~~41	~~28~~44	3080

						Cooling											Heating			
						0.1%		0.5%		1.0%		2.0%								
County	City	Climate Zone	Latitude	Elevation (ft)	Longitude	DB	MCWB	DB	MCWB	DB	MCWB	DB	MCWB	Design Wetbulb 0.1%	Design Wetbulb 0.5%	Outdoor Daily Range	Winter Median of Extremes	Design Drybulb (0.2%)	Design Drybulb (0.6%)	HDD*
San Joaquin	Calaveras Big Trees	12	38.3	4696	120.3	92	61	88	60	87	60	84	58	~~73~~64	~~71~~62	33	11	~~30~~18	~~33~~23	5848
San Joaquin	Country Club	12	37.8	600		102	69	97	68	96	68	92	66	72	70	30	68	28	31	977
San Joaquin	Garden Acres	12	38.0	20		103	71	98	69	97	69	93	67	73	71	35	24	28	30	1334
San Joaquin	Lathrop	12	37.8	22	121.3	103	71	98	69	97	69	93	67	73	71	35	24	28	30	1300
San Joaquin	Lincoln Village	12	38.0	12	121.3	101	70	96	68	95	68	91	67	72	70	37	24	28	30	1334
San Joaquin	Lodi	12	38.1	40	121.3	101	70	97	68	95	68	91	67	~~60~~72	~~58~~70	38	23	~~1~~28	~~7~~31	2859
San Joaquin	Manteca	12	37.8	34	121.2	102	70	97	68	95	68	91	67	~~71~~72	~~69~~70	37	24	~~42~~29	~~45~~32	
San Joaquin	Ripon	12	37.7	61	121.1	102	70	97	68	95	68	91	67	72	70	37	23	30	33	1240
San Joaquin	Stockton AP	12	37.9	22	121.3	103	71	98	69	97	69	93	67	~~72~~73	~~70~~71	35	24	~~36~~28	~~38~~30	2806
San Joaquin	Stockton FS 4	12	38.0	12	121.3	101	70	96	68	95	68	91	67	~~73~~72	~~71~~70	37	24	28	30	2846
San Joaquin	Tracy Carbona	12	37.7	140		102	70	97	68	95	68	90	67	~~71~~72	~~69~~70	38	24	~~37~~29	~~39~~32	2704
San Joaquin	Tracy Pumps	12	37.8	61		104	71	99	69	97	69	92	68	~~72~~73	71~~70~~	39	23	~~29~~28	~~32~~31	
San Luis Obispo	Arroyo Grande	5	35.1	105	120.6	92	66	86	64	84	64	79	62	67	65	18	28	32	35	
San Luis Obispo	Atascadero	4	35.5	837	120.7	94	66	89	67	88	67	84	65	70	68	42	25	29	32	
San Luis Obispo	Baywood-Los Osos	5	35.3	100		88	65	82	64	80	64	76	62	67	65	14	31	36	38	
San Luis Obispo	Cambria AFS	5	35.5	690	121.1	78	62	72	61	70	61	66	59	~~71~~64	~~69~~62	16	30	~~32~~35	~~35~~38	3646
San Luis Obispo	El Paso de Robles	4	35.6	721		102	65	95	65	94	65	90	65	69	67	44	16	20	23	1768
San Luis Obispo	Grover City	5	35.1	100		93	69	86	64	84	64	80	62	67	65	18	30	34	37	
San Luis Obispo	Morro Bay FD	5	35.4	115	120.9	88	65	82	64	80	64	76	62	~~71~~67	~~69~~65	14	31	~~31~~36	~~34~~38	
San Luis Obispo	Nacimiento Dam	4	35.8	770	120.9	100	68	94	66	92	66	88	64	~~75~~70	~~72~~68	35	22	~~31~~23 8	~~34~~31	
San Luis Obispo	Nipomo	5	35.0	330	120.5	90	66	83	64	82	63	78	61	67	65	23	25	31	33	1035
San Luis Obispo	Oceano	5	35.1	20	120.6	93	69	86	64	84	64	80	62	67	65	18	30	34	37	795
San Luis Obispo	Paso Robles AP	4	35.7	815	120.7	104	66	97	66	96	66	92	65	~~73~~70	~~71~~68	40	19	~~37~~23	~~40~~26	2973
San Luis Obispo	Paso Robles CO	4	35.6	700	120.7	102	65	95	65	94	65	90	65	~~70~~69	~~68~~67	44	16	~~23~~20	~~26~~23	2885
San Luis Obispo	Pismo Beach	5	35.1	80	120.6	92	66	85	64	84	64	80	62	~~69~~67	~~67~~65	16	30	~~35~~34	~~38~~37	2756
San Luis Obispo	Point Piedras Blancas	5	35.7	59	121.3	73	60	67	59	65	59	61	57	~~70~~62	~~68~~60	10	36	~~37~~41	~~39~~43	3841
San Luis Obispo	San Luis Obispo	5	35.3	320	120.7	94	63	87	63	85	63	81	62	~~66~~67	~~64~~65	26	30	~~25~~33	~~28~~35	2498
San Luis Obispo	Twitchell Dam	5	35.0	582	120.3	99	70	93	68	92	68	88	66	~~53~~71	~~50~~69	26	26	~~-2~~31	434	
San Mateo	Atherton	3	37.5	50	122.2	90	66	84	64	82	64	78	62	68	66	27	23	29	33	

						Cooling											Heating			
						0.1%		0.5%		1.0%		2.0%								
County	City	Climate Zone	Latitude	Elevation (ft)	Longitude	DB	MCWB	DB	MCWB	DB	MCWB	DB	MCWB	Design Wetbulb 0.1%	Design Wetbulb 0.5%	Outdoor Daily Range	Winter Median of Extremes	Design Drybulb (0.2%)	Design Drybulb (0.6%)	HDD*
San Mateo	Belmont	3	37.5	33	122.3	90	66	84	64	82	64	78	62	68	66	24	29	34	36	
San Mateo	Burlingame	3	37.6	10	122.4	88	67	82	64	80	64	76	63	68	65	20	30	35	37	
San Mateo	Daly City	3	37.6	410	122.5	84	65	78	62	77	62	73	61	66	63	16	34	37	39	
San Mateo	East Palo Alto	3	37.5	25	122.1	93	66	85	64	83	64	77	62	68	66	25	26	31	34	1103
San Mateo	Foster City	3	37.5	20	122.7	92	67	84	65	82	65	76	63	68	66	22	29	34	36	
San Mateo	Half Moon Bay	3	37.5	60	122.4	83	64	76	62	74	61	69	59	~~68~~65	~~66~~63	15	32	~~22~~37	~~26~~39	3843
San Mateo	Hillsborough	3	37.6	352	122.3	90	66	82	65	80	65	74	64	68	66	23	30	35	37	
San Mateo	Menlo Park	3	37.4	65	122.3	94	67	86	65	84	65	78	63	69	67	25	27	32	~~0~~34	
San Mateo	Millbrae	3	37.6	10	122.4	90	66	82	63	80	63	74	61	~~70~~67	~~68~~65	24	30	~~33~~35	~~35~~37	
San Mateo	Pacifica	3	37.6	13	122.0	87	65	79	62	77	62	71	60	66	64	16	31	35	37	
San Mateo	Redwood City	3	37.5	31	122.2	90	67	86	66	85	66	81	64	~~71~~69	~~69~~67	28	28	~~42~~33	~~44~~35	2599
San Mateo	San Bruno	3	37.7	20	122.4	86	66	80	64	78	64	73	62	~~66~~67	~~64~~65	23	30	~~25~~35	~~28~~38	3042
San Mateo	San Carlos	3	37.5	26	122.3	92	67	88	65	86	65	82	63	~~66~~68	~~64~~66	28	28	~~25~~33	~~28~~35	
San Mateo	San Gregorio 2 SE	3	37.3	275		87	66	81	63	79	63	74	61	~~66~~68	~~64~~65	30	27	~~25~~32	~~28~~35	
San Mateo	San Mateo	3	37.5	21	122.3	92	67	84	65	82	65	76	63	~~72~~68	~~70~~66	24	31	~~31~~36	~~34~~38	2655
San Mateo	South San Francisco	3	37.7	10	122.4	87	67	81	64	78	64	72	62	68	65	20	32	36	38	
San Mateo	Woodside	3	37.5	75	122.3	92	67	84	66	82	65	76	63	69	67	24	22	28	31	
Santa Barbara	Cachuma Lake	5	34.6	781	120.0	97	69	92	67	91	67	87	65	~~71~~70	~~69~~68	19	26	~~43~~31	~~45~~34	
Santa Barbara	Carpinteria	6	34.4	385	119.5	90	69	83	67	81	67	77	65	70	68	15	30	34	37	
Santa Barbara	Cuyama	4	34.9	2255	116.6	99	68	96	67	94	67	89	66	~~70~~72	~~68~~70	42	13	~~33~~20	~~36~~24	
Santa Barbara	Guadalupe	5	35.0	85	120.6	92	66	86	64	84	64	79	62	67	65	18	28	32	35	1035
Santa Barbara	Isla Vista	6	34.5	40	119.9	90	69	83	67	81	67	77	65	70	68	20	33	38	40	
Santa Barbara	Lompoc	5	34.9	95	120.5	84	63	77	62	76	62	72	60	~~71~~65	~~69~~63	18	26	~~38~~31	~~40~~34	2888
Santa Barbara	Point Arguello	5	34.6	76	120.7	75	64	71	63	69	62	65	59	~~63~~65	~~61~~63	17	29	32	~~34~~35	3826
Santa Barbara	Santa Barbara AP	6	34.4	9	119.8	90	69	83	67	81	67	77	65	70	68	20	29	~~29~~34	~~32~~36	2487
Santa Barbara	Santa Barbara CO	6	34.4	5	119.7	91	69	84	67	82	67	78	65	70	68	22	33	~~29~~38	~~32~~40	1994
Santa Barbara	Santa Maria AP	5	34.9	236	120.5	90	66	83	64	82	63	78	61	~~74~~67	~~72~~65	23	25	~~35~~31	~~37~~33	3053
Santa Barbara	Vandenburg AFB	5	34.7	368	122.8	85	62	77	61	75	61	71	60	~~74~~64	~~71~~62	16	30	~~33~~35	~~39~~37	3451
Santa Clara	Almaden AFS	3	37.2	3470	121.9	95	62	90	60	89	60	85	59	~~71~~64	~~69~~62	20	20	~~33~~25	~~36~~29	4468

						Cooling											Heating			
						0.1%		0.5%		1.0%		2.0%								
County	City	Climate Zone	Latitude	Elevation (ft)	Longitude	DB	MCWB	DB	MCWB	DB	MCWB	DB	MCWB	Design Wetbulb 0.1%	Design Wetbulb 0.5%	Outdoor Daily Range	Winter Median of Extremes	Design Drybulb (0.2%)	Design Drybulb (0.6%)	HDD*
Santa Clara	Alum Rock	4	37.4	70	121.8	95	68	90	66	88	66	84	64	70	68	22	28	33	36	
Santa Clara	Campbell	4	37.3	195	121.8	93	69	88	66	87	66	83	65	71	68	30	28	33	36	
Santa Clara	Cupertino	4	37.3	70	122.0	96	68	88	67	86	66	80	64	70	68	30	28	33	36	
Santa Clara	Gilroy	4	37.0	194	121.6	101	70	93	68	91	67	86	65	~~73~~72	~~71~~69	25	23	~~29~~28	~~32~~31	
Santa Clara	Los Altos	4	37.3	163	122.0	96	68	88	65	86	64	80	62	70	68	26	28	33	35	
Santa Clara	Los Altos Hills	4	37.3	183	122.1	93	67	85	64	83	64	77	63	68	66	25	28	33	35	1103
Santa Clara	Los Gatos	4	37.2	365	122.0	98	69	90	67	88	67	82	66	~~72~~71	~~70~~69	32	26	~~29~~31	~~31~~34	2741
Santa Clara	Milpitas	4	37.4	15	121.9	94	68	87	65	85	65	79	63	70	67	27	27	32	35	
Santa Clara	Moffett Field NAS	4	37.4	39	122.1	89	68	84	66	82	66	78	64	~~75~~70	~~72~~68	23	30	~~30~~34	~~33~~36	2511
Santa Clara	Morgan Hill	4	37.1	350	120.0	100	69	92	68	90	68	85	66	71	69	25	26	31	34	
Santa Clara	Mount Hamilton	4	37.3	4206	121.7	95	59	88	58	86	58	81	56	~~70~~63	~~68~~61	18	18	~~32~~24	~~35~~27	4724
Santa Clara	Mountain View	4	37.5	95	121.9	93	67	85	64	83	64	77	62	68	66	25	28	33	35	
Santa Clara	Palo Alto	4	37.5	25	122.1	93	66	85	64	83	64	77	62	~~71~~68	~~69~~66	25	26	~~21~~31	~~25~~34	2891
Santa Clara	San Jose	4	37.4	67	121.9	94	68	86	66	84	66	78	64	~~66~~70	~~64~~68	26	29	~~25~~34	~~28~~36	2438
Santa Clara	Santa Clara Univ	4	37.4	88	121.9	90	67	87	65	86	65	82	63	~~70~~69	~~68~~67	30	29	~~29~~34	~~32~~36	2566
Santa Clara	Saratoga	4	37.3	500	122.0	96	67	88	66	86	66	80	65	70	68	31	27	32	35	
Santa Clara	Stanford	4	37.5	23		93	66	85	64	83	64	77	62	68	66	25	26	31	34	1103
Santa Clara	Sunnyvale	4	37.3	97	122.0	96	68	88	66	86	66	80	64	~~74~~70	~~72~~68	26	29	~~33~~34	~~36~~36	2511
Santa Cruz	Aptos	3	37.0	500	121.9	94	67	88	66	87	65	83	63	69	67	30	27	32	35	
Santa Cruz	Ben Lomond	3	37.1	450	122.1	92	67	85	66	83	65	79	63	~~68~~69	~~66~~67	30	25	~~34~~30	~~36~~33	
Santa Cruz	Boulder Creek	3	37.2	493	122.1	92	67	85	65	83	65	79	63	69	67	30	25	30	33	1120
Santa Cruz	Capitola	3	37.0	64	122.0	94	67	88	66	86	65	81	63	69	67	24	27	32	35	
Santa Cruz	Felton	3	37.0	100	122.1	94	68	88	66	86	66	81	64	69	67	28	27	32	35	1097
Santa Cruz	Freedom	3	37.0	1495	121.8	89	67	85	64	83	64	79	62	68	65	22	27	32	34	
Santa Cruz	Opal Cliffs	3	37.0	125	122.0	94	68	88	66	86	66	81	64	69	67	28	27	32	35	1097
Santa Cruz	Rio Del Mar	3	37.0	50	121.9	94	67	88	66	87	65	83	63	69	67	30	27	32	35	1097
Santa Cruz	Santa Cruz	3	37.0	125	122.0	94	68	88	66	86	66	81	64	~~74~~69	~~72~~67	28	27	~~35~~32	~~37~~35	3136
Santa Cruz	Scotts Valley	3	37.0	400	122.0	94	68	88	66	86	66	81	64	69	67	28	27	32	35	1097
Santa Cruz	Soquel	3	37.0	50	122.0	94	67	88	66	86	65	81	63	69	67	24	27	32	35	1097

						Cooling											Heating			
						0.1%		0.5%		1.0%		2.0%								
County	City	Climate Zone	Latitude	Elevation (ft)	Longitude	DB	MCWB	DB	MCWB	DB	MCWB	DB	MCWB	Design Wetbulb 0.1%	Design Wetbulb 0.5%	Outdoor Daily Range	Winter Median of Extremes	Design Drybulb (0.2%)	Design Drybulb (0.6%)	HDD*
Santa Cruz	Watsonville	3	36.9	95	121.8	86	66	82	64	81	63	79	61	~~74~~68	~~72~~65	22	28	~~28~~33	~~31~~35	3418
Shasta	Anderson	11	40.5	430	122.3	107	71	103	70	101	70	97	68	72	70	30	26	31	34	
Shasta	Burney	16	40.9	3127	121.7	95	64	92	63	91	63	88	61	~~68~~67	65	42	0	~~35~~5	~~37~~12	6404
Shasta	Enterprise	11	40.6	470	122.3	107	69	103	68	101	68	97	67	72	70	29	26	31	34	
Shasta	Hat Creek PH 1	16	40.9	3015	121.6	99	65	96	64	95	64	91	62	~~69~~68	~~67~~66	48	2	~~24~~7	~~27~~17	5689
Shasta	Iron Mtn	11	34.1	922	115.1	116	75	112	74	111	74	108	73	~~69~~80	~~67~~78	26	29	~~30~~34	~~33~~36	1251
Shasta	Manzanita Lake	16	40.5	5850	121.6	87	58	84	57	83	57	79	55	~~72~~61	~~70~~59	34	-3	~~29~~2	~~32~~8	7617
Shasta	Platina	11	40.4	2260	122.9	96	65	92	64	91	63	87	61	~~69~~67	~~67~~65	36	13	~~28~~20	~~31~~24	
Shasta	Redding FS 4	11	40.6	470	122.4	107	69	103	68	101	68	97	67	~~73~~72	~~71~~70	30	26	~~29~~31	~~31~~34	2544
Shasta	Shasta Dam	16	40.7	1076	122.4	105	69	101	68	99	68	95	67	~~74~~72	~~72~~70	27	29	~~29~~34	~~32~~36	2943
Shasta	Whiskeytown Res	11	40.6	1295	122.6	105	69	101	68	100	68	96	67	72	70	31	25	~~41~~30	~~44~~33	
Sierra	Downieville RS	16	39.6	2895	120.8	98	64	95	63	94	63	90	61	~~73~~68	~~71~~66	42	13	~~37~~20 ~~1~~2	~~39~~24	
Sierra	Sierra City	16	39.6	4230	120.1	96	62	93	61	92	61	89	59	~~74~~66	~~71~~64	43	12	~~34~~19	~~37~~24	
Sierra	Sierraville RS	16	39.6	4975	120.4	94	60	91	59	90	59	86	57	~~73~~64	~~71~~62	44	-10	~~37~~-4	~~39~~0	6893
Siskiyou	Callahan	16	41.3	3185	122.8	97	63	93	62	92	62	88	60	~~72~~66	~~70~~64	35	7	~~17~~15	~~22~~20	
Siskiyou	Cecilville	16	41.1	3000	123.1	95	63	89	62	88	61	84	59	~~72~~65	~~70~~63	44	13	~~27~~20	~~30~~24	
Siskiyou	Fort Jones RS	16	41.6	2725	122.9	98	64	93	63	92	63	88	61	~~62~~67	~~61~~65	44	5	~~34~~13	~~37~~18	5590
Siskiyou	Happy Camp RS	16	41.8	1150	123.4	103	67	97	66	96	66	92	65	~~73~~69	~~71~~67	41	18	~~28~~24	~~31~~27	4263
Siskiyou	Hilt	16	42.0	2900	122.6	97	64	93	62	92	62	89	60	~~68~~66	~~66~~64	39	5	~~35~~13	~~37~~18	
Siskiyou	Lava Beds	16	41.7	4770	121.5	93	59	89	58	88	58	84	56	~~73~~63	~~71~~61	41	-1	~~28~~4	~~30~~11	
Siskiyou	McCloud	16	41.3	3300	122.1	96	63	93	62	91	62	87	60	~~74~~66	~~71~~64	42	5	~~28~~13	~~31~~18	5990
Siskiyou	Montague	16	41.8	2648	122.5	99	66	95	65	94	65	90	63	~~73~~69	~~71~~67	39	3	~~38~~11	~~41~~16	5474
Siskiyou	Mount Hebron RS	16	41.8	4250	122.0	92	60	88	59	86	59	82	57	63	61	42	-10	~~24~~-4	~~27~~0	
Siskiyou	Mount Shasta	16	41.3	3535	122.3	93	62	89	61	88	61	84	59	~~61~~65	~~59~~63	34	8	~~4~~15	~~11~~20	5890
Siskiyou	Sawyer's Bar RS	16	41.3	2169		100	66	95	65	93	64	88	62	~~67~~68	~~65~~66	38	14	~~34~~21	~~36~~25	4102
Siskiyou	Tulelake	16	42.0	4035	121.5	92	60	88	59	87	59	83	57	~~74~~63	~~72~~61	41	-5	~~30~~0	~~34~~6	6854
Siskiyou	Weed FD	16	41.4	3590	122.4	92	63	89	62	88	61	84	59	~~69~~65	~~67~~63	35	4	~~17~~12	~~22~~17	
Siskiyou	Yreka	16	41.7	2625	122.6	99	66	95	65	94	65	90	64	~~67~~69	~~65~~67	39	8	~~18~~15	~~23~~20	5395
Solano	Benicia	12	38.1	55	122.1	99	69	93	67	91	67	87	65	70	68	30	28	33	36	

						Cooling											Heating			
						0.1%		0.5%		1.0%		2.0%								
County	City	Climate Zone	Latitude	Elevation (ft)	Longitude	DB	MCWB	DB	MCWB	DB	MCWB	DB	MCWB	Design Wetbulb 0.1%	Design Wetbulb 0.5%	Outdoor Daily Range	Winter Median of Extremes	Design Drybulb (0.2%)	Design Drybulb (0.6%)	HDD*
Solano	Dixon	12	38.4	100	121.9	104	72	99	70	97	70	93	68	~~71~~74	~~68~~71	36	24	~~32~~30	~~35~~33	2826
Solano	Fairfield FS	12	38.3	38	122.0	103	69	98	68	96	68	91	66	~~71~~73	~~68~~71	34	24	~~31~~30	~~34~~33	2686
Solano	Gillespie Field	12	32.8	385		98	71	91	70	89	70	85	68	~~60~~73	~~58~~71	30	24	~~13~~29	~~18~~32 ~~1~~	
Solano	Monticello Dam	2	38.5	505	122.1	105	71	100	70	98	70	94	68	73	~~71~~71 ~~2~~	39	26	31	34	
Solano	Suisun City	12	38.2	72	122.0	103	71	98	69	96	68	91	66	73	70	35	24	29	32	1299
Solano	Vacaville	12	38.4	105	122.0	103	71	100	70	98	70	94	68	~~69~~73	~~67~~71	40	23	~~33~~28	~~35~~31	2788
Solano	Vallejo	3	38.1	85	122.3	93	67	90	66	88	66	84	64	70	68	23	28	33	36	
Sonoma	Boyes Hot Sprgs	2	38.2	300	122.5	100	70	95	69	93	69	89	67	~~63~~72	~~60~~70	40	22	~~17~~28	~~22~~31	1289
Sonoma	Cloverdale	2	38.8	320	123.0	102	70	97	69	95	68	89	66	~~71~~72	~~68~~70	37	26	~~32~~31	~~35~~34	2763
Sonoma	Cotati	2	38.3	100	122.7	99	69	94	68	93	68	89	66	71	69	32	24	28	30	1205
Sonoma	Fort Ross	1	38.5	116	123.3	79	63	74	62	71	61	65	59	~~67~~64	~~64~~62	19	30	~~29~~35	~~32~~37	4127
Sonoma	Graton	2	38.4	200	122.9	95	68	91	67	88	66	82	64	~~69~~70	~~67~~68	34	22	~~25~~28	~~28~~31	3409
Sonoma	Healdsburg	2	38.6	102	122.9	102	69	95	68	94	68	90	66	~~68~~71	~~66~~69	37	26	31	34	2572
Sonoma	Larksfield-Wikiup	2	38.5	170		99	69	96	68	95	68	92	66	71	69	35	24	27	29	1249
Sonoma	Lucas Vly-Marinwood	2	38.3	20		79	63	74	62	71	61	65	59	64	62	12	30	35	37	874
Sonoma	Petaluma FS 2	2	38.2	16	122.6	98	69	92	67	90	67	85	66	~~74~~72	~~72~~69	31	24	~~27~~29	~~30~~32	2959
Sonoma	Rohnert Park	2	38.4	106	122.6	99	69	96	68	95	68	92	66	71	69	33	24	27	29	
Sonoma	Roseland	2	38.4	167	122.7	99	69	96	68	95	68	92	66	71	69	35	24	27	29	1249
Sonoma	Santa Rosa	2	38.5	167	122.8	99	69	96	68	95	68	92	66	~~73~~71	~~71~~69	35	24	~~33~~27	~~35~~29	2980
Sonoma	Sausalito	3	37.9	10		85	66	80	65	78	65	73	63	67	65	12	30	34	36	
Sonoma	Sebastapol	2	38.4	102		99	69	96	68	95	68	92	66	71	69	35	24	27	29	1249
Sonoma	Sonoma	2	38.3	70	122.5	101	70	96	69	94	69	90	67	~~70~~72	~~67~~70	40	22	~~29~~28	~~32~~31	2998
Sonoma	Travis AFB	12	38.3	72	121.9	103	71	98	69	96	68	91	66	73	~~71~~70	35	24	~~28~~29	~~31~~32	2725
Sonoma	Windsor	2	38.5	130		99	69	96	68	95	68	92	66	71	69	35	24	27	29	1249
Stanislaus	Ceres	12	37.6	90	121.0	101	72	96	70	94	69	90	67	~~65~~74	~~63~~72	36	24	~~6~~30	~~13~~34	
Stanislaus	Crows Landing	12	37.4	140	121.1	101	70	96	68	94	68	89	66	~~66~~72	~~64~~70	33	23	~~20~~28	~~24~~31	2767
Stanislaus	Denair	12	37.6	137	120.8	100	70	95	69	93	69	89	67	~~74~~72	~~72~~70	38	22	~~25~~28	~~28~~31	2974
Stanislaus	Knights Ferry	12	37.8	315	120.6	103	70	99	68	98	68	94	67	~~64~~73	~~61~~71	37	19	~~31~~25	~~33~~28	

						Cooling											Heating			
						0.1%		0.5%		1.0%		2.0%								
County	City	Climate Zone	Latitude	Elevation (ft)	Longitude	DB	MCWB	DB	MCWB	DB	MCWB	DB	MCWB	Design Wetbulb 0.1%	Design Wetbulb 0.5%	Outdoor Daily Range	Winter Median of Extremes	Design Drybulb (0.2%)	Design Drybulb (0.6%)	HDD*
																		~~36~~	~~38~~	
Stanislaus	Modesto	12	37.6	91	121.0	102	73	99	70	98	70	95	68	~~69~~75	~~67~~72	36	25	~~27~~30	~~30~~33	2671
Stanislaus	Newman	12	37.3	90	121.1	104	71	99	69	97	69	93	67	73	71	38	22	~~33~~28	~~36~~31	
Stanislaus	Oakdale	12	37.8	215	120.9	102	71	99	69	97	69	93	67	73	71	37	22	28	32	
Stanislaus	Patterson	12	37.4	97	121.1	101	72	96	70	94	69	90	67	74	72	36	24	30	34	1240
Stanislaus	Riverbank	12	37.7	133	120.9	102	73	99	70	98	70	95	68	75	72	36	25	30	33	1240
Stanislaus	Turlock	12	37.5	100	120.9	104	72	100	70	99	70	95	68	74	72	40	24	30	34	
Sutter	Live Oak	11	39.2	75	121.7	105	70	102	69	101	69	97	69	73	71	36	24	29	32	1160
Sutter	South Yuba City	11	39.1	59		105	69	101	69	100	69	96	68	72	71	36	24	29	32	1160
Sutter	Yuba City	11	39.1	70	121.6	105	69	101	69	100	69	96	68	72	71	36	24	29	32	
Tehama	Corning	11	39.9	487	122.2	106	71	103	70	102	69	98	67	73	71	33	23	28	31	1330
Tehama	Mill Creek	16	35.1	2940	117.0	102	67	97	66	96	66	94	65	70	68	28	28	33	36	
Tehama	Mineral	16	40.4	4911	121.6	90	60	87	59	86	59	82	57	~~70~~63	~~67~~61	38	2	~~32~~7	~~35~~14	7257
Tehama	Red Bluff AP	11	40.2	342	122.3	107	70	104	69	102	68	98	66	~~70~~73	~~68~~71	31	24	~~25~~29	~~28~~31	2688
Trinity	Big Bar RS	16	40.8	1260	121.8	102	68	98	67	97	67	93	65	~~71~~70	~~69~~68	46	19	~~43~~25	~~46~~28	
Trinity	Forest Glen	16	40.4	2340	123.3	96	65	92	64	91	64	88	62	~~73~~67	~~71~~65	42	12	~~30~~19	~~34~~24	
Trinity	Salyer RS	16	40.9	623	123.6	102	69	95	67	93	66	87	64	~~66~~70	~~64~~68	33	22	~~25~~28	~~28~~31	
Trinity	Trinity Dam	16	40.8	2500	122.8	99	65	94	64	92	64	88	62	~~73~~68	~~70~~66	37	17	~~29~~24	~~32~~28	
Trinity	Weaverville RS	16	40.7	2050	122.9	100	67	95	66	93	65	89	63	~~68~~69	~~65~~67	46	10	~~33~~17	~~35~~22	4992
Tulare	Ash Mtn	13	36.5	1708	118.8	105	69	101	68	100	68	97	66	~~74~~72	~~72~~70	30	25	~~29~~31	~~32~~33	2703
Tulare	Dinuba	13	36.5	340	119.4	104	73	101	70	100	70	96	69	75	73	36	24	30	34	
Tulare	Earlimart	13	35.8	283	119.3	106	71	102	70	101	70	98	69	74	72	36	23	26	29	1100
Tulare	East Porterville	13	36.1	393		106	71	102	70	101	70	97	69	74	72	36	25	30	33	1129
Tulare	Exeter	13	36.3	350	119.1	104	72	101	71	100	71	97	69	74	72	39	24	29	32	1236 ~~9~~
Tulare	Fairview	16	35.9	3519	118.5	97	67	94	66	93	66	90	64	70	68	43	11	18	23	
Tulare	Farmersville	13	36.3	350	119.2	104	72	101	72	100	71	97	69	74	72	39	24	29	32	1236
Tulare	Giant Forest	16	36.6	6412	118.8	84	56	81	55	80	55	77	53	~~68~~60	~~66~~58	26	5	~~24~~13	~~27~~18	
Tulare	Grant Grove	16	36.7	6600	119.0	82	56	78	55	77	54	74	52	~~74~~59	~~72~~57	26	6	~~33~~14	~~36~~19	7044
Tulare	Lemoncove	13	36.4	513	119.0	105	72	102	70	101	70	98	68	72	70	38	25	38	41	2513

						Cooling											Heating			
						0.1%		0.5%		1.0%		2.0%								
County	City	Climate Zone	Latitude	Elevation (ft)	Longitude	DB	MCWB	DB	MCWB	DB	MCWB	DB	MCWB	Design Wetbulb 0.1%	Design Wetbulb 0.5%	Outdoor Daily Range	Winter Median of Extremes	Design Drybulb (0.2%)	Design Drybulb (0.6%)	HDD*
Tulare	Lindsay	13	36.2	395	119.1	105	72	101	71	100	71	97	69	74	72	40	24	~~32~~29	~~35~~32	2634
Tulare	Orosi	13	36.5	400	119.3	104	73	101	70	100	70	96	69	75	73	36	24	30	34	1130
Tulare	Porterville	13	36.1	393	119.0	106	71	102	70	101	70	97	69	~~70~~74	~~68~~72	36	25	~~37~~30	~~39~~33	2456
Tulare	Posey 3 E	13	35.8	4960	119.0	89	62	86	61	85	61	82	59	65	63	26	9	~~-3~~16	~~1~~21	
Tulare	Three Rivers PH 1	13	36.5	1140	118.9	105	70	102	69	101	69	98	67	~~72~~73	~~70~~71	38	24	~~32~~30	~~35~~32	2642
Tulare	Tulare	13	36.2	290	119.4	105	72	101	71	100	71	96	69	~~73~~74	~~71~~72	39	24	~~26~~30	~~29~~34	
Tulare	Visalia	13	36.3	325	119.3	103	71	100	70	99	70	96	69	~~71~~73	~~69~~72	38	25	~~18~~30	~~22~~33	2459
Tulare	Woodlake	13	36.3	500	119.1	103	71	100	70	99	70	96	69	73	72	38	25	30	33	1130
Tuolomne	Hetch Hetchy	16	38.0	3870	119.8	93	62	89	61	88	61	85	59	~~70~~65	~~68~~63	32	14	21	25	4816
Tuolumne	Cherry Valley Dam	10	38.0	4765	119.9	96	62	92	61	91	61	88	59	~~72~~65	~~70~~63	32	9	~~31~~16	~~34~~21	
Tuolumne	Sonora RS	12	38.0	1749	120.4	103	68	100	67	99	67	95	66	72	70	34	20	~~28~~26	~~31~~29	3537
Tuolumne	South Entr Yosemite	16	37.5	5120	119.6	92	61	88	60	87	60	84	59	~~74~~64	~~72~~62	36	8	~~36~~15	~~38~~20	5789
Tuolumne	Strawberry Valley	16	39.6	3808		96	63	93	62	92	62	88	60	~~72~~66	~~70~~64	32	14	~~27~~21	~~30~~25	5120
Ventura	Camarillo	6	34.2	147	119.2	91	69	84	68	82	68	78	67	71	69	22	28	32	35	
Ventura	Dry Canyon Res	16	34.5	1455	118.5	105	71	100	69	99	69	96	68	~~66~~74	~~64~~72	32	24	~~5~~29	~~12~~32	
Ventura	El Rio	6	34.3	50	119.2	95	69	88	68	86	68	82	66	71	69	20	30	34	37	
Ventura	Fillmore	9	34.4	435	118.9	100	70	94	69	92	69	87	67	73	71	30	28	32	35	
Ventura	Ojai	9	34.5	750	119.3	102	71	97	69	95	69	91	68	~~70~~73	~~68~~71	38	25	~~37~~29	~~39~~32	2145
Ventura	Oxnard AFB	6	34.2	49	119.2	94	69	86	68	84	68	79	67	~~69~~71	~~67~~69	21	30	~~38~~34	~~40~~37	2068
Ventura	Point Mugu	6	34.1	14	119.1	88	68	81	67	79	67	75	66	~~65~~70	~~63~~68	15	33	~~32~~37	~~35~~39	2328
Ventura	Port Hueneme	6	34.2	13	119.0	88	68	81	67	79	67	75	66	~~71~~70	~~69~~68	15	33	~~33~~37	~~36~~39	2334
Ventura	San Nicholas Island	6	33.2	504	119.5	85	66	78	65	76	65	70	64	~~72~~69	~~70~~67	11	39	~~31~~43	~~34~~45	2454
Ventura	Santa Paula	9	34.4	263	119.1	101	71	94	70	92	70	87	68	~~69~~73	~~67~~71	28	28	~~44~~33	~~46~~35	2030
Ventura	Simi Valley	9	34.4	500	118.8	98	70	93	68	91	68	87	66	73	71	30	28	33	35	
Ventura	Thousand Oaks	9	34.2	810	118.8	98	69	93	68	92	68	88	67	72	70	30	27	32	35	
Ventura	Ventura	6	34.3	341	119.3	89	68	82	67	80	67	76	66	70	68	15	29	34	36	
Yolo	Broderick-Bryte	12	38.6	20	121.5	104	71	100	69	98	69	94	67	72	71	36	25	31	35	
Yolo	Brooks Ranch	12	38.8	294	122.2	104	71	99	70	97	70	93	68	~~72~~73	71	35	19	~~31~~25	~~35~~28	2968
Yolo	Clarksburg	12	38.4	14	121.5	102	70	97	69	95	69	91	67	~~74~~72	~~72~~70	35	24	~~26~~29	~~29~~32	2971

						Cooling											Heating			
						0.1%		0.5%		1.0%		2.0%								
County	City	Climate Zone	Latitude	Elevation (ft)	Longitude	DB	MCWB	DB	MCWB	DB	MCWB	DB	MCWB	Design Wetbulb 0.1%	Design Wetbulb 0.5%	Outdoor Daily Range	Winter Median of Extremes	Design Drybulb (0.2%)	Design Drybulb (0.6%)	HDD*
Yolo	Davis	12	38.5	60	121.8	103	72	99	70	97	70	93	68	~~72~~74	~~70~~71	41	24	~~28~~30	~~31~~34	2844
Yolo	West Sacramento	12	38.6	19	121.5	104	72	100	70	98	70	94	68	74	71	35	26	31	33	1290
Yolo	Winters	12	38.5	135	122.0	104	71	99	70	97	70	93	68	~~71~~73	~~69~~71	38	24	~~27~~29	~~29~~32	2593
Yolo	Woodland	12	38.7	69	121.8	106	72	101	71	100	71	96	69	~~73~~74	72	40	25	30	33	2708
Yuba	Beale AFB	11	39.1	113	121.4	105	71	102	70	101	70	97	68	~~67~~74	~~65~~72	34	25	~~36~~28	~~38~~30	2835
Yuba	Dobbins	11	39.4	1640	121.2	104	70	101	68	100	68	96	67	~~74~~72	~~71~~70	31	24	~~30~~29	~~33~~32	
Yuba	Linda	11	39.0	60	121.6	105	72	102	70	101	70	97	68	74	72	30	27	32	35	1160
Yuba	Marysville	11	39.2	60	121.6	105	72	102	70	101	70	97	68	~~71~~74	~~69~~72	36	27	~~33~~32	35	2552
Yuba	Olivehurst	11	39.0	64	121.6	105	72	102	70	101	70	97	68	74	72	36	27	32	35	1160

***Heating Degree Day** is a unit, based on temperature difference and time, used in estimating fuel consumption and specifying nominal annual heating load of a building. For any one day when the mean temperature is less than 65ºF (18ºC), there exist as many degree days as there are Fahrenheit degrees difference in temperature between mean temperature for the day and 65ºF (18ºC).

KEY TO ABBREVIATIONS:

AFB	Air Force Base
AFS	Air Force Station
AP	Airport
CO	City/County Office
FD	Fire Department
FS	Fire Station
MCB	Marine Corps Base
MWWB	Mean Coincident Wet Bulb
NAS	Naval Air Station
NM	National Monument
PH	Power House
RS	Ranger Station

JA2.3 23 WYEC2 Climate/Weather Data Format

The ASCII versions of the WYEC2 weather files consist of 8760 identical fixed format records, one for each hour of a 365-day year. Each record is 116 characters in length and is organized according to the format shown in Table ~~11~~2-4, which follows.

The WYEC2 format is derived from the NOAA TD-9734 Typical Meteorological Year (TMY) format in that WYEC2 uses the same field encoding and units as TMY. However, it should be noted that ***all WYEC2 values are for Local Standard Time.*** That is, WYEC2 data should be read sequentially and used with no conversion (except any required unit conversions). This is in marked contrast to the TMY files which contain solar data for Apparent Solar Time and meteorological data for Local Standard Time.

Irradiance and illuminance fields contain data integrated over the hour, meteorological fields contain observations made at the end of the hour. For example, hour 12 contains irradiance/illuminance integrated from 11-12 and meteorological observations made at 12.

Table ~~11~~2-4 – WYEC DATA FORMAT

Field Number	Data Positions	Flag Position (see notes)	Data Element and Description
001	001-005	--	**WBAN station identification number** - Unique number to identify each station - California compliance files contain 00001 - 00016 in this field to indicate the climate zone
002	006-006	--	**File source code** - W = WYEC - T = TMY - C = California Compliance
003	007-014	--	**Time, Yr Mo Day Hr (2 chars each)** - Yr omits the "19" and indicates the source year for the data, i.e., 00 = 1900, 99 = 1999. Data within a single WYEC2 file may have been observed in more than one year. - Mo is 1 to 12. - Day is 1 to month length (28, 30, or 31). - Hr is 1 to 24.
101	015-018	--	**Extraterrestrial irradiance, kJ/m^2** - Amount of solar energy received at top of atmosphere during solar hour ending at time indicated in field 003, based on solar constant of 1367 kJ/m^2. - Nightime values are shown as 0.
102	019-022	023-024	**Global horizontal irradiance, kJ/m^2** - Total of direct and diffuse radiant energy received on a horizontal surface by a pyranometer during the hour ending at the time indicated in field 003.
103	025-028	029-030	**Direct normal irradiance, kJ/m^2** - Portion of the radiant energy received at the pyrheliometer directly from the sun during the hour ending at the time indicated in field 003.
104	031-034	035-036	**Diffuse horizontal irradiance, kJ/m^2** - Amount of radiant energy in kJ/m2 received at the instrument indirectly from the sky during the hour ending at the time indicated in field 003.
105	037-040	041	**Global horizontal illuminance, lux * 100**
106	042-045	046	**Direct normal illuminance, lux * 100**
107	047-050	051	**Diffuse horizontal illuminance, lux * 100**
108	052-055	056	**Zenith luminance, Cd/m^2 * 100**
110	057-058	059	**Minutes of sunshine, 0 - 60 minutes**

Field Number	Data Positions	Flag Position (see notes)	Data Element and Description
201	060-063	064	**Ceiling Height, m * 10** - Ceiling is defined as opaque sky cover of 0.6 or greater. 0000 - 3000 = 0 to 30,000 m 7777 = unlimited; clear 8888 = unknown height of cirroform ceiling
202	065-068	069	**Sky Condition** - All observations assumed to be made after 1 June 1951 ("indicator" at position 77 in TMY is omitted). - Coded by layer in ascending order; four layers are described; if less than 4 layers are present the remaining positions are coded 0. The code for each layer is: 0 = Clear of less than 0.1 cover 1 = Thin scattered (0.1 - 0.5 cover) 2 = Opaque scattered (0.1 - 0.5 cover) 3 = Thin broken (0.6 - 0.9 cover) 4 = Opaque broken (0.6 - 0.9 cover) 5 = Thin overcast (1.0 cover) 6 = Opaque overcast (1.0 cover) 7 = Obscuration 8 = Partial obscuration
203	070-073	074	**Visibility, m * 100** - Prevailing horizontal visibility. 0000-1600 = 0 to 160 kilometers 8888 = unlimited
204	075-082	083	**Weather** - Eight single digit codes as follows:
204 (cont.)	075		**Occurrence of thunderstorm, tornado or squall.** 0 = None 1 = Thunderstorm - lightning and thunder. Wind gusts less than 50 knots, and hail, if any, less than 3/4 inch diameter. 2 = Heavy or severe thunderstorm - frequent intense lightning and thunder. Wind gusts 50 knots or greater and hail, if any, 3/4 inch or greater diameter. 3 = Report of tornado or waterspout. 4 = Squall (sudden increase of wind speed by at least 16 knots, reach 22 knots or more and lasting for at least one minute).
204 (cont.)	076		**Occurrence of rain, rain showers or freezing rain:** 0 = None 1 = Light rain 2 = Moderate rain 3 = Heavy rain 4 = Light rain showers 5 = Moderate rain showers 6 = Heavy rain showers 7 = Light freezing rain 8 = Moderate or heavy freezing rain
204 (cont.)	077		**Occurrence of drizzle, freezing drizzle:** 0 = None 1 = Light drizzle 2 = Moderate drizzle 3 = Heavy drizzle 4 = Light freezing drizzle 5 = Moderate freezing drizzle 6 = Heavy freezing drizzle

Field Number	Data Positions	Flag Position (see notes)	Data Element and Description
204 (cont.)	078		**Occurrence of snow, snow pellets or ice crystals:** 0 = None 1 = Light snow 2 = Moderate snow 3 = Heavy snow 4 = Light snow pellets 5 = Moderate snow pellets 6 = Heavy snow pellets 7 = Light ice crystals 8 = Moderate ice crystals Beginning April 1963 intensities of ice crystals were discontinued. All occurrences since this date are recorded as an 8.
204 (cont.)	079		**Occurrence of snow showers or snow grains:** 0 = None 1 = Light snow showers 2 = Moderate snow showers 3 = Heavy snow showers 4 = Light snow grains 5 = Moderate snow grains 6 = Heavy snow grains Beginning April 1963 intensities of snow grains were discontinued. All occurrences since this date are recorded as a 5.
204 (cont.)	080		**Occurrence of sleet (ice pellets), sleet showers or hail:** 0 = None 1 = Light sleet or sleet showers (ice pellets) 2 = Moderate sleet or sleet showers (ice pellets) 3 = Heavy sleet or sleet showers (ice pellets) 4 = Light hail 5 = Moderate hail 6 = Heavy hail 7 = Light small hail 8 = Moderate or heavy small hail Prior to April 1970 ice pellets were coded as sleet. Beginning April 1970 sleet and small hail were redefined as ice pellets and are coded as a 1, 2, or 3 in this position. Beginning September 1956 intensities of hail were no longer reported and all occurrences were recorded as a 5.
204 (cont.)	081		**Occurrence of fog, blowing dust or blowing sand:** 0 = None 1 = Fog 2 = Ice Fog 3 = Ground Fog 4 = Blowing dust 5 = Blowing sand These values recorded only when visibility less than 7 miles.
204 (cont.)	082		**Occurrence of smoke, haze, dust, blowing snow or blowing spray:** 0 = None 1 = Smoke 2 = Haze 3 = Smoke and haze 4 = Dust 5 = Blowing snow 6 = Blowing spray These values recorded only when visibility less than 7 miles.

Field Number	Data Positions	Flag Position (see notes)	Data Element and Description
205	084-088	089	**Station pressure, kilopascals (kPa) * 100** Pressure at station level 08000 - 10999 = 80 to 109.99 kPa.
206	090-093	094	**Dry bulb temperature, °C * 10** -700 to 0600 = -70.0 to +60.0 °C
207	095-098	099	**Dew point, °C * 10** -700 to 0600 = -70.0 to +60.0 °C
208	100-102	103	**Wind direction, 0 - 359 degrees** 0 = north Note TMY range is 0-360, WYEC2 has recoded 360 as 0.
209	104-107	108	**Wind speed, m/s * 10** 0 - 1500 = 0 to 150.0 m/s. Wind speed and wind direction both 0 indicates calm.
210	109-110	111	**Total Sky Cover, 0 - 10 in tenths** Amount of celestial dome in tenths covered by clouds or obscuring phenomena.
211	112-113	114	**Opaque Sky Cover, 0 - 10 in tenths** Amount of celestial dome in tenths covered by clouds or obscuration through which the sky and/or higher cloud layers cannot be seen.
212	115-115	116	**Snow Cover** 0 = no snow or a trace of snow 1 = indicates more than a trace of snow on the ground

Notes for Table 2-4 – WYEC DATA FORMAT**:**

1. Total file size (including CRLFs) = 118 x 8,760 = 1,033,680 characters.
2. Flag characters indicate the source of the associated value and, in the case of solar fields, optionally give information about the quality of the value.

Some fields have no flag, others have 1 or 2 character flags as follows:

Field	Flag Type/Comment
001 – 003	None (record identification fields)
101	None (calculated extraterrestrial irradiance is always present)
102 – 1042	Character (irradiance values)
105 – 2121	Character (all remaining fields)

One character flags are alphabetic (with the exception of 9 for missing) and are defined as follows:

(blank) Value was observed (that is, not derived with a model and not altered.)

A Value has been algorithmically adjusted (e.g., dry bulb temperatures were shifted to match long term means).

E Value was missing and has been replaced by a hand estimate.

F Value was bad and has been replaced by a hand estimate.

I Value was missing and has been replaced with one derived by interpolation from neighboring observations.

J Value was bad and has been replaced with one derived by interpolation from neighboring observations.

M Value was missing and has been replaced with one derived with a model (model used depends on element).

N Value was bad and has been replaced with one derived with a model (model used depends on element).

P Value violated a physical limit and has been replaced by that limit.

Q Value is derived from other values (e.g., illuminance data which were not observed).

9 Value is missing; data positions contain 9s as well.

Two character flags (on irradiance fields 102, 103, and 104) are *either*:

A 1 Character flag (as defined above) followed by a blank, or

A 2 Character numeric value in the range 00 to 99 and are defined in *SERI Standard Broadband Format 2*, as follows:

00 Element is untested (original data)

01-03 Element passed tests on physical limits, model limits (for tolerances less than 3%), and reasonable coupling to other parameters (for tolerances less than 3%).

04 Element passed hand/eye tests.

05 Element failed hand/eye tests and has not been corrected.

06 Element was missing and has not been replaced with an estimate.

07 Element's value is lower than a physical limit.

08 Element's value is higher than a physical limit.

09 Element's value is inconsistent with other components (e.g. direct not consistent with global)

10-93 Element exceeded the 3% tolerance in one of four ways. The following error types are defined:

0 = too low by 3-parameter coupling

1 = too high by 3-parameter coupling

2 = too low by 2D boundary comparison

3 = too high by 2D boundary caparison

The flags in this range are constructed in such a way that both the percentage of error and the type of error are encoded in the two digit flag. To create the flag, one multiplies the percentage of disagreement by 4, subtract 2, and add the error type. The percentage of error should be truncated - only the integer part is used.

The particular error is determined by the remainder of MOD(IQC=2 / 4), where "MOD0 is a mathematical function representing the remainder of the quantity (IQC+2)/4 and "IQC" is the two digit flag number. The percentage error is determined by

IPCT = Int((IQC + 2) /4)

IPCT = 23 indicates an error greater than 23%.

94-97 KN = KT + ERR

FLAG	ERR
94	5% ETR <= ERR <10% ETR
95	10% ETR <= ERR <15% ETR
96	15% ETR <= ERR < 20% ETR
97	20% ETR <= ERR
99	Element is missing or null.

It should be noted that the 2 character numeric flags are appropriate for encoding the results of quality control processing of archival solar data. The 1 character alphabetic flags are appropriate for "best estimate" data sets

in which any questionable values have been replaced. Most WYEC2 files used for engineering purposes will fall into the latter category and will thus use the alphabetic flags on solar fields.

3. Missing elements are 9 filled: all data and flag positions contain 9s.
4. Conversion factors relevant to WYEC2 use:

To convert from	To	Multiply By
kj/m^2	Btu/ft^2	0.08807
m/s * 10	mph	0.2273
kPa	in. Hg.	0.002953
m * 10	ft	32.808
m * 100 miles	miles	0.06214

~~II.5Climate/Weather Data Adjustments for Local Conditions~~

~~JA2.3 Note: This section is related to nonresidential buildings only.~~

~~This appendix section describes the official procedure used by the California Energy Commission to adjust the Title 24 climate zone data for the sixteen (16) climate zones to match the ASHRAE design day conditions for a specific city.[1] Computer software available from the California Energy Commission takes weather data from one of the sixteen climate zones and uses ASHRAE design data for a specific city within that climate zone to create weather data in the format required by the DOE-2 building simulation program.[2] The generated weather data has the latitude, longitude, elevation and air properties of a particular city instead of the climate zone's designated weather station indicated in Table D-3. This procedure only modifies the weather data on the climate zone data file to match a city's design conditions for the days which fall within the ASHRAE summer and winter design day percentage levels. However, the entire data set is adjusted to reflect the city's elevation. This city-specific data into DOE-2 allows the program's Heating Ventilation and Air-Conditioning (HVAC) sizing procedures to use design conditions closer to the simulated building's actual location. This section outlines the procedure used to incorporate a city's design day data into an hourly climate zone data set.~~

~~JA2.4Background~~

~~The California Energy Commission, in developing and implementing the Title 24 building energy efficiency standards, has defined sixteen zones that encompass the diversity of California's climatic regions. Each climate zone's hourly weather data set has been derived, predominantly, from a single weather station. Past work sponsored by the Commission modified these data sets to reflect the weather conditions of specific geographic areas within certain climate zones where high levels of building construction were anticipated. This modified Title 24 climate zone data, however, does not represent the particular climatic conditions of any individual city or a specific building site but rather the climate zone as a whole. The weather adjustments described below are intended to increase a compliance program's ability to properly size and simulate HVAC systems.~~

~~JA2.5Reference Year~~

~~The 1991 calendar year must be used as the basis for the frequency and timing of the occurrence of holidays, Saturdays and Sundays. The reference method observes the holidays listed in Section 2.3.3.3 of the Nonresidential ACM. This is a fixed compliance input that must be the same for both the standard and proposed designs. The reference method uses CECREV2 hourly data in WYEC format for the sixteen climate zones. Weather data is available in DOE compressed format for the reference computer simulation program along with programs to produce weather data from these files customized to the design weather data for each city in California. The weather data is also available in archived ASCII format for all 8760 hours for each of the 16 climate zones.~~

~~JA2.6Definitions~~

~~CITY One of the California cities listed in ASHRAE's CLIMATIC DATA FOR REGION X~~

~~TAPE Hourly data which describes the regional weather patterns for one of the 16 California climate zones~~

~~RH Relative Humidity (%)~~

~~DB Dry Bulb temperature (°F)~~

~~WB Wet Bulb temperature (°F)~~

~~P Pressure (psia)~~

~~MIN Minimum Daily Dry Bulb Temperature (^{o}F)~~

~~MAX Maximum Daily Dry Bulb Temperature (^{o}F)~~

~~AVG Average Daily Dry Bulb Temperature (^{o}F)~~

~~=MAX - MIN) / 2~~

~~RANGE Daily Dry Bulb Temperature Range (^{o}F)~~

~~= (MAX - MIN)~~

~~RH RATIO The Daily Ratio of RH_{MAX} for the CITY to RH_{MAX} for the TAPE~~

~~ODR Outdoor Daily Range (^{o}F) as defined by ASHRAE: the difference between the average maximum and average minimum temperature for the warmest month~~

~~F An hourly temperature function derived from the TAPE~~

~~= (DB_{HR} - AVG) / RANGE~~

~~JA2.7Methodology~~

~~First, the climate zone design conditions as specified by ASHRAE are computed from the TAPE. The maximum DB is also found off the TAPE. The CITY maximum DB is computed as:~~

~~$CITY_{max\ DB} = TAPE_{max\ DB} * CITY_{0.1\%\ DB} / TAPE_{0.1\%\ DB}$. [1]~~

~~The psychrometric equations are used to derive RH for the TAPE design conditions[3]. The atmospheric pressure is adjusted for the CITY elevation, then RH is computed for the CITY design conditions. The form of equation [1] is used to derive the CITY maximum RH, using the TAPE maximum RH and the RH values computed for the TAPE and the CITY at the 0.1% DB conditions.~~

~~For each day of the year the following steps are completed:~~

~~1.MAX, Min, AVG, RAGE, WB_{MAX} and RH_{MAX} are determined for the TAPE,~~

~~2.A mapping procedure, delineated in Figure 1, is used to find RH_{MAX} for the CITY from the CITY RH design values, the TAPE DB design values and MAX for the TAPE,~~

~~3.RH_{MAX} and RH RATIO are determined for the CITY. The RH RATIO is set to 1 for all days with MAX less than the CITY 2.0% maximum DB, which equates the RH of the CITY to the RH of the TAPE for all non-design days,~~

~~4.MAX and MIN for the CITY are computed using mapping procedures similar to that illustrated in Figure 1, from the CITY DB design conditions, the TAPE DB design conditions and MAX/MIN for the TAPE,~~

~~5.MAX and MIN for the CITY are corrected for the CITY elevation[4],~~

~~6.RANGE is calculated for the CITY. RANGE is adjusted by the ratio of the ODR for the CITY to the ODR of the TAPE if MAX is greater then the CITY 2.0% maximum DB,~~

~~7.AVG for the CITY is calculated in one of three ways:~~

~~(a) AVG = MAX -5.0* RANGE,~~

~~if MAX > CITY 2.0% maximum DB, or~~

~~(b) AVG = MIN + 0.5* RANGE,~~

~~if MIN < CITY 0.6% minimum DB, or~~

~~(c) AVG = (MAX + MIN) / 2.~~

~~Once the daily CITY statistics are computed, they can be applied to the hourly TAPE to generate an hourly CITY weather data set. For each hour of the year, the following steps are completed.~~

~~1.F is calculated from the Tape,~~

~~2.P is corrected for CITY elevation,~~

~~3.RH is calculated for the TAPE,~~

~~4.RH for the CITY is derived by applying the RH RATIO to the RH for the TAPE,~~

~~5.DB for the CITY is computed: DB = AVG + F * RANGE,~~

~~6.WB is calculated using the new values for RH, DB and P for the CITY.~~

~~Upon completion of all weather adjustments the resulting data set is converted to the binary format required by the DOE-2 simulation program.~~

~~JA2.8Results~~

~~An example of the hourly weather adjustments from a TAPE to a CITY is displayed in figure 2. Four summer days are extracted from both the climate zone 16 data (Mt. Shasta) and the city-specific data (Tahoe City). The first day plotted falls below the design day threshold; the next three days plotted are design days. The figure depicts the expected downshift of hourly temperatures from Mt. Shasta (maximum DB = 96^{0}F) to Tahoe City (maximum DB = 87^{0}F).~~

~~JA2.9Software Package~~

~~To obtain the software used to adjust DOE-2 files to local design conditions for 641 California cities that is described in this section, write to:~~

~~Local Weather Software~~
~~Energy Efficiency and Demand Analysis Division~~
~~California Energy Commission~~
~~1516 Ninth St., MS-28~~
~~Sacramento, Ca 95814-5512~~

~~JA2.10NOTES for SECTION II2.54~~

~~1.ASHRAE Publication SPCDX, CLIMATIC DATA FOR REGION X: ARIZONA, CALIFORNIA, HAWAII, NEVADA, defines a city's design day conditions as the ambient dry bulb and wet bulb temperatures which are percentage levels of hours on an annual basis: Summer values are presented for the 0.1%, 0.5% and 2.0% of the annual maximum dry bulb temperature; Winter values are presented for the median, the 0.2% and 0.6% of the annual minimum dry bulb temperature. This publication lists design day data for 641 California cities.~~

~~2.The computer software described herein produces two output files. The first file is the hourly weather data in binary DOE-2 format. To produce this file staff has incorporated a program created by Jeff Hirsch (James J. Hirsch and Associates) which converts an ASCII data file into the packed DOE-2 file format. This file is compatible with the DOE-2 program compiled and distributed by James J. Hirsch and Associates as well as several other PC versions of DOE-2. The second file produced is an ASCII file that contains building location data as well as specific design data required by the CEC's nonresidential Alternative Calculation Method (ACM) procedures.~~

~~3.The mathematical equations which describe the thermodynamic properties of moist air are published in the ASHRAE HANDBOOK FUNDAMENTALS Volume, PSYCHROMETRICS Chapter. The relative humidity (RH) which corresponds to specific dry bulb and wet bulb temperatures is derived by these principles of psychrometrics throughout this weather adjustment procedure.~~

~~JA2.11Elevation adjustments to dry bulb temperature and pressure are made using the standard atmospheric data published in the ASHRAE FUNDAMENTALS Volume, PSYCHROMETRIC Chapter.~~

Joint Appendix JA3 – 2008

Appendix JA3 – Time Dependent Valuation (TDV)

JA3.1 Scope and Purpose

Time dependent valuation (TDV) is the currency used to compare energy performance when the performance compliance method is used. TDV is also used to evaluate the cost effectiveness of measures and to perform other codes analysis. TDV replaces source energy, which was used to compare performance prior to the 2005 Standards.

TDV consists of large data sets that convert electricity, gas or propane to TDV energy. The rate of conversion varies for each hour of the year, for each climate zone and for each energy type (electricity, natural gas or propane). The conversion factors also vary by building type: low-rise residential and other building types, including nonresidential, hotel/motel and high-rise residential. There are a total of 96 hourly data sets (16 climates x 3 energy types x 2 building types). The actual TDV data may be downloaded from http://www.energy.ca.gov/title24/2008standards/documents/E3/index.html or by writing to:

Time Dependent Valuation (TDV) Data
Energy Efficiency and Demand Analysis Division
California Energy Commission
1516 Ninth St., MS-28
Sacramento, CA 95814-5512

The tables to be used are those without externalities. Because of the length, the actual data is not published in this appendix.

JA3.2 Summary of Data

Table 3-1 through Table 3-3 give a statistical summary of the TDV conversion factors for electricity, natural gas and propane. Each table has the annual minimum, maximum, and average for each climate zone and building type.

- ~~Table III-1 – TDV Statistical Data – Electricity~~Table 3-1 – TDV Statistical Data – Electricity (kBtu/kWh)Table 3-1 – TDV Statistical Data – Electricity (kBtu/kWh)
- ~~Table III-2 – TDV Statistical Data – Natural Gas~~Table 3-2 – TDV Statistical Data – Natural Gas (kBtu/therm)
- ~~Table III-3 – TDV Statistical Data – Propane~~Table 3-3 – TDV Statistical Data – Propane (kBtu/therm)

For electricity, there are nonresidential conversion factors for both a 15-year and a 30-year life-cycle. The 30-year factors are used to evaluate cost-effectiveness of building envelope measures; 15-year conversion factors are used to evaluate other building measures and for compliance runs. Figure 3-1 through Figure 3-8 show typical variation in the TDV conversion factors for climate zone 12 (Sacramento). Electricity variation is shown for the whole year (Figure 3-1 and Figure 3-3) and for the Month of July (Figure 3-2 and Figure 3-4). Variation is greatest for electricity. Figure 3-5 through Figure 3-8 show the annual variation for natural gas and propane; note that there is no daily or hourly variation, only monthly variation.

- ~~Figure III-1 – Residential Electricity – Climate Zone 12 – Annual~~Figure 3-1 – Residential Electricity – Climate Zone 12 – Annual
- Figure 3-2 – Residential Electricity – Climate Zone 12 – July
- ~~Figure III-2 – Residential Electricity – Climate Zone 12 – July~~

- ~~Figure III-3 – Nonresidential Electricity – Climate Zone 12 – Annual~~Figure 3-3 – Nonresidential Electricity – Climate Zone 12 – Annual
- ~~–~~
- Figure 3-4 – Nonresidential Electricity – Climate Zone 12 – July
- Figure 3-5 – Residential Natural Gas – Climate Zone 12 – Annual
- Figure 3-6 – Nonresidential Natural Gas – Climate Zone 12 – Annual
- Figure 3-7 – Residential Propane – Climate Zone 12 – Annual
- Figure 3-8 – Nonresidential Propane – Climate Zone 12 – Annual

Table ~~III~~3-1 – TDV Statistical Data – Electricity (kBtu/kWh)

	Residential			Nonresidential (15yr)			Nonresidential (30 yr)		
Climate Zone	Minimum	Average	Maximum	Minimum	Average	Maximum	Minimum	Average	Maximum
1	3.95	13.93	138.65	7.61	18.61	172.92	6.20	17.43	157.69
2	4.04	13.94	137.55	7.68	18.58	172.99	6.27	17.40	156.41
3	4.28	13.97	137.78	8.06	18.70	173.37	6.62	17.52	156.76
4	4.17	13.96	166.14	7.89	18.66	201.27	6.47	17.48	188.63
5	4.17	13.95	137.67	7.98	18.73	173.29	6.55	17.55	156.69
6	4.07	14.00	120.77	10.32	21.20	157.36	8.80	19.97	140.05
7	7.02	17.64	165.65	3.86	15.57	200.08	2.78	14.72	181.20
8	4.06	13.98	131.80	10.32	21.18	164.84	8.78	19.94	152.45
9	4.00	13.95	184.00	10.22	21.13	221.40	8.71	19.90	211.15
10	3.94	13.92	120.64	10.10	21.08	157.13	8.64	19.87	139.89
11	3.91	13.93	182.19	7.48	18.53	226.28	6.07	17.35	206.59
12	4.01	13.94	145.38	7.62	18.56	176.48	6.20	17.38	165.20
13	4.25	13.97	155.19	8.00	18.68	194.14	6.57	17.50	176.33
14	3.93	13.92	153.08	10.10	21.08	195.18	8.63	19.87	176.37
15	3.92	13.92	133.70	10.08	21.08	170.12	8.62	19.87	154.58
16	3.85	13.93	156.86	7.43	18.54	188.67	6.03	17.37	178.11

Table ~~III~~3-2 – TDV Statistical Data – Natural Gas (kBtu/therm)

	Residential			Nonresidential (15yr)			Nonresidential (30 year)		
Climate Zone	Minimum	Average	Maximum	Minimum	Average	Maximum	Minimum	Average	Maximum
1	138.60	148.11	165.73	141.49	150.74	167.87	153.60	163.24	181.08
2	138.60	148.11	165.73	141.49	150.74	167.87	153.60	163.24	181.08
3	138.60	148.11	165.73	141.49	150.74	167.87	153.60	163.24	181.08
4	138.60	148.11	165.73	141.49	150.74	167.87	153.60	163.24	181.08
5	138.60	148.11	165.73	141.49	150.74	167.87	153.60	163.24	181.08
6	138.60	148.11	165.73	141.49	150.74	167.87	153.60	163.24	181.08
7	138.60	148.11	165.73	141.49	150.74	167.87	153.60	163.24	181.08
8	138.60	148.11	165.73	141.49	150.74	167.87	153.60	163.24	181.08
9	138.60	148.11	165.73	141.49	150.74	167.87	153.60	163.24	181.08
10	138.60	148.11	165.73	141.49	150.74	167.87	153.60	163.24	181.08
11	138.60	148.11	165.73	141.49	150.74	167.87	153.60	163.24	181.08

12	138.60	148.11	165.73	141.49	150.74	167.87	153.60	163.24	181.08
13	138.60	148.11	165.73	141.49	150.74	167.87	153.60	163.24	181.08
14	138.60	148.11	165.73	141.49	150.74	167.87	153.60	163.24	181.08
15	138.60	148.11	165.73	141.49	150.74	167.87	153.60	163.24	181.08
16	138.60	148.11	165.73	141.49	150.74	167.87	153.60	163.24	181.08

Table ~~III~~3-3 – TDV Statistical Data – Propane (kBtu/therm)

	Residential			Nonresidential (15yr)			Nonresidential (30 year)		
Climate Zone	Minimum	Average	Maximum	Minimum	Average	Maximum	Minimum	Average	Maximum
1	150.07	189.53	222.69	149.55	188.86	221.92	160.19	202.31	237.72
2	150.07	189.53	222.69	149.55	188.86	221.92	160.19	202.31	237.72
3	150.07	189.53	222.69	149.55	188.86	221.92	160.19	202.31	237.72
4	150.07	189.53	222.69	149.55	188.86	221.92	160.19	202.31	237.72
5	150.07	189.53	222.69	149.55	188.86	221.92	160.19	202.31	237.72
6	150.07	189.53	222.69	149.55	188.86	221.92	160.19	202.31	237.72
7	150.07	189.53	222.69	149.55	188.86	221.92	160.19	202.31	237.72
8	150.07	189.53	222.69	149.55	188.86	221.92	160.19	202.31	237.72
9	150.07	189.53	222.69	149.55	188.86	221.92	160.19	202.31	237.72
10	150.07	189.53	222.69	149.55	188.86	221.92	160.19	202.31	237.72
11	150.07	189.53	222.69	149.55	188.86	221.92	160.19	202.31	237.72
12	150.07	189.53	222.69	149.55	188.86	221.92	160.19	202.31	237.72
13	150.07	189.53	222.69	149.55	188.86	221.92	160.19	202.31	237.72
14	150.07	189.53	222.69	149.55	188.86	221.92	160.19	202.31	237.72
15	150.07	189.53	222.69	149.55	188.86	221.92	160.19	202.31	237.72
16	150.07	189.53	222.69	149.55	188.86	221.92	160.19	202.31	237.72

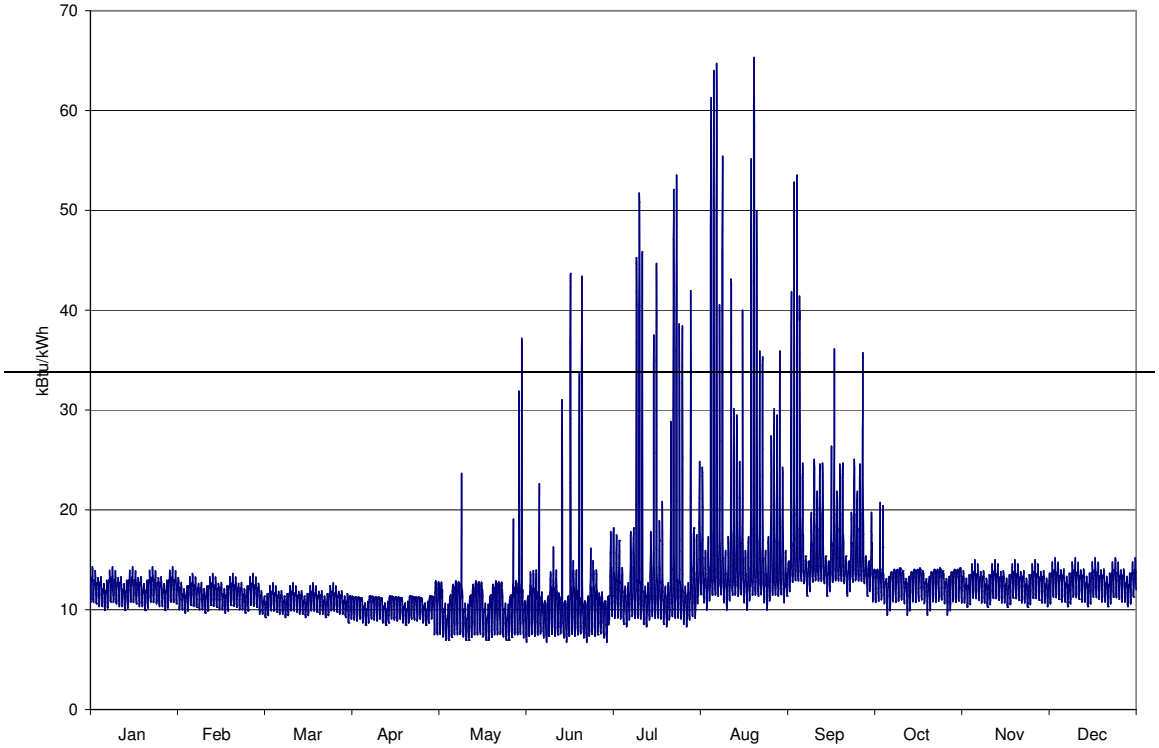

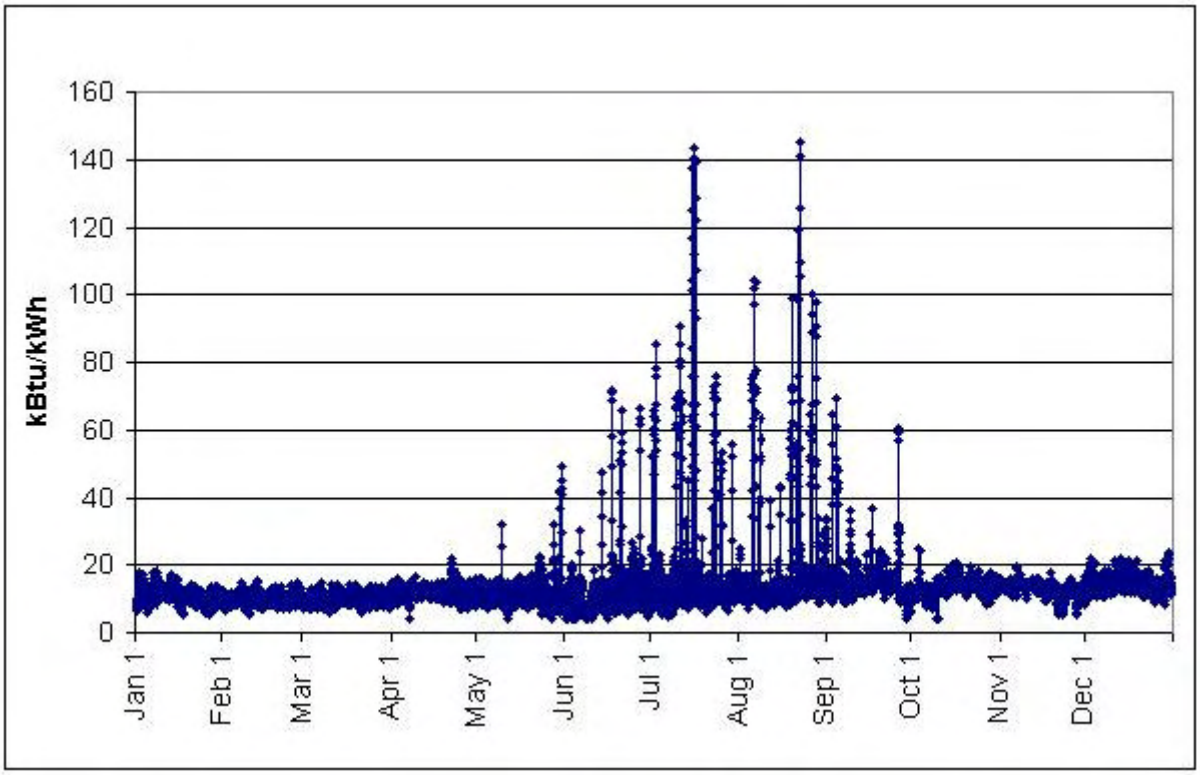

Figure ~~III~~3-1 – Residential Electricity – Climate Zone 12 – Annual

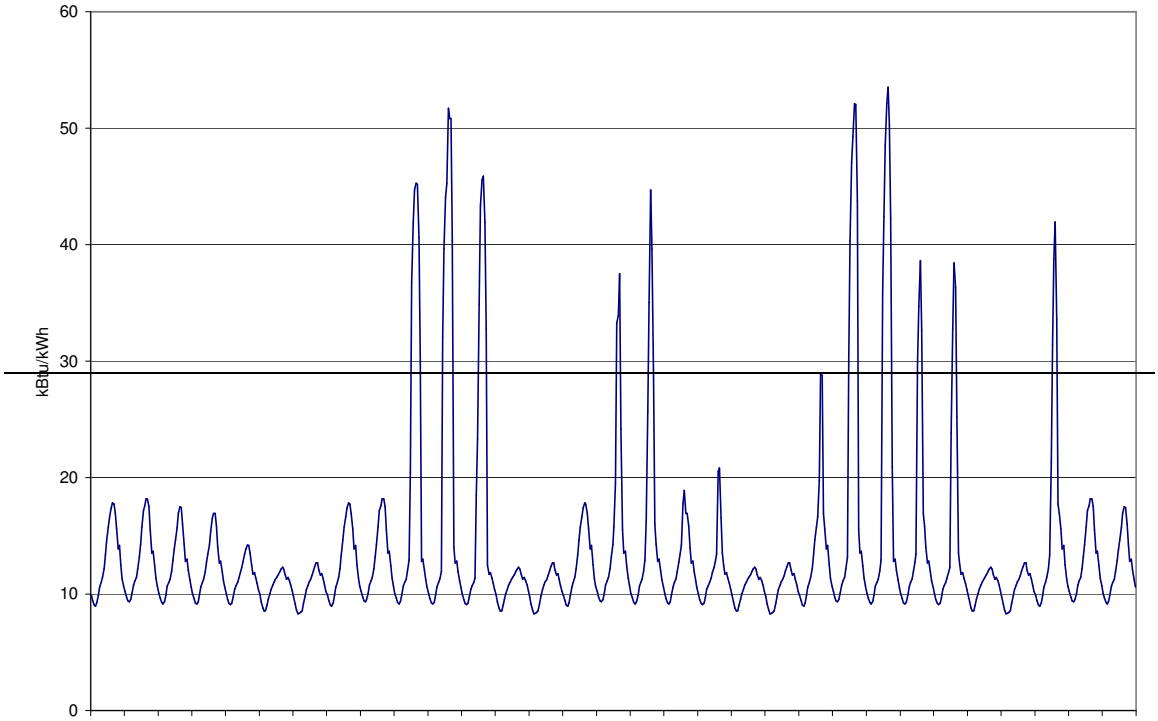

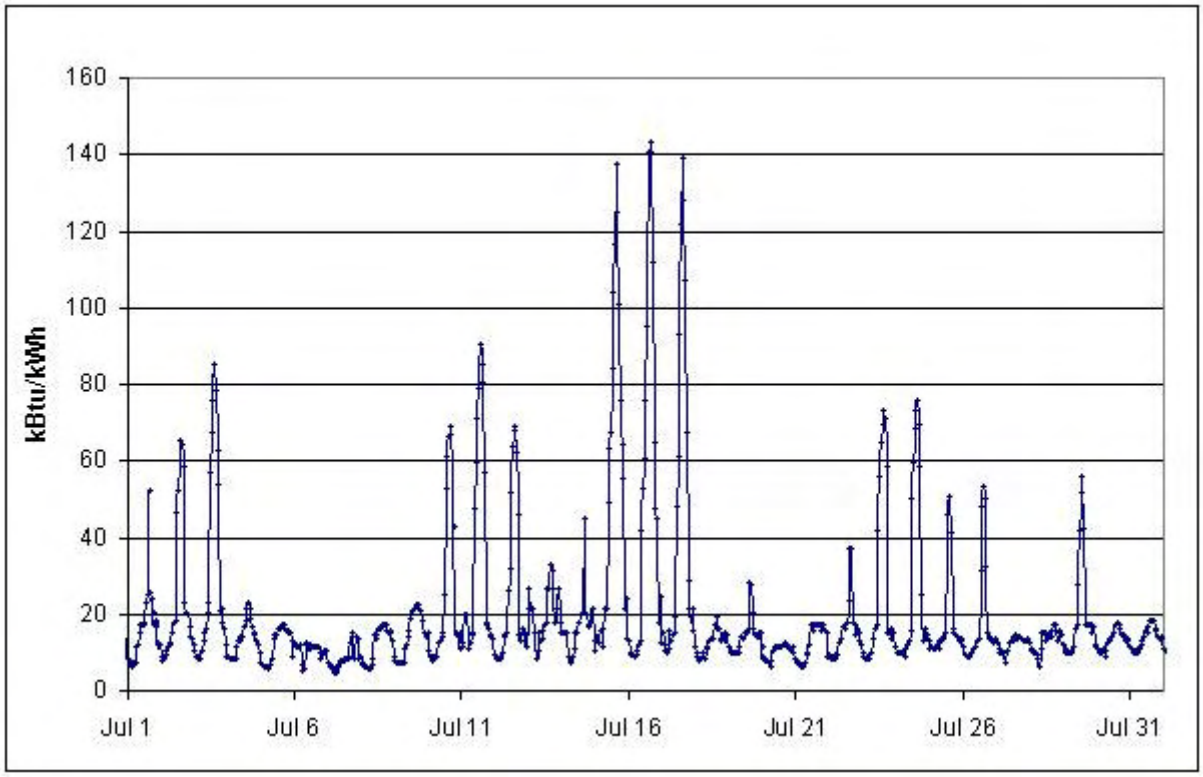

Figure ~~III~~3-2 – Residential Electricity – Climate Zone 12 – July

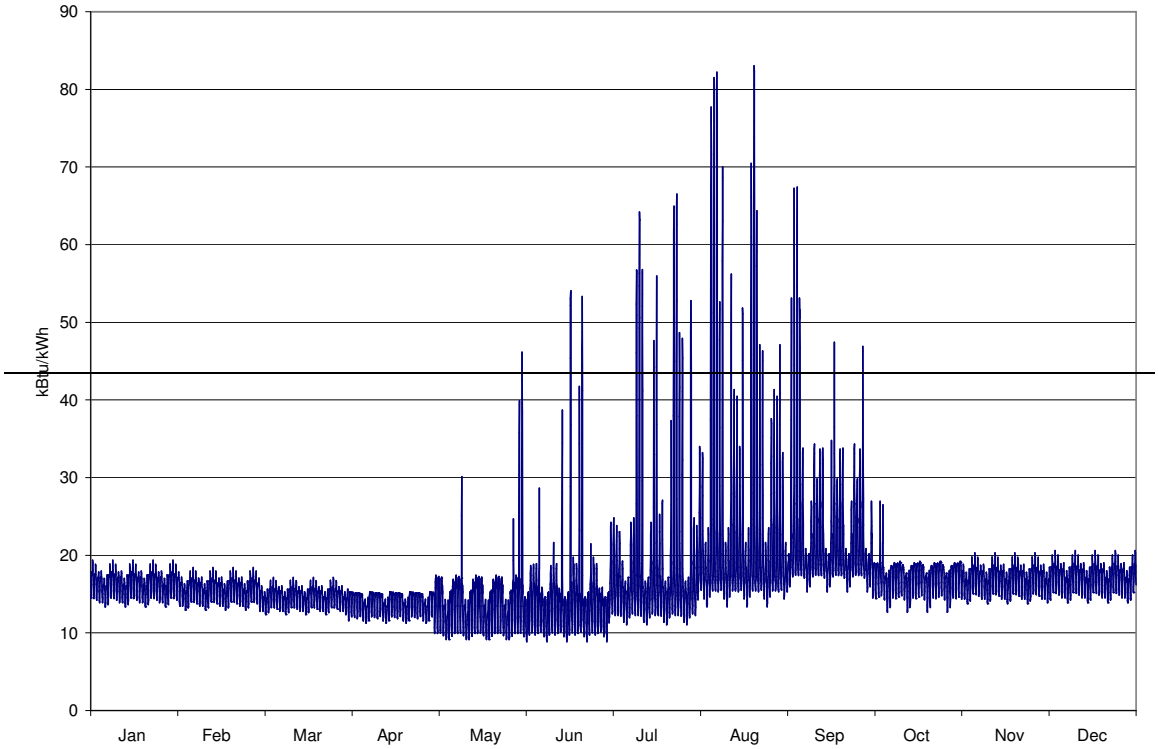

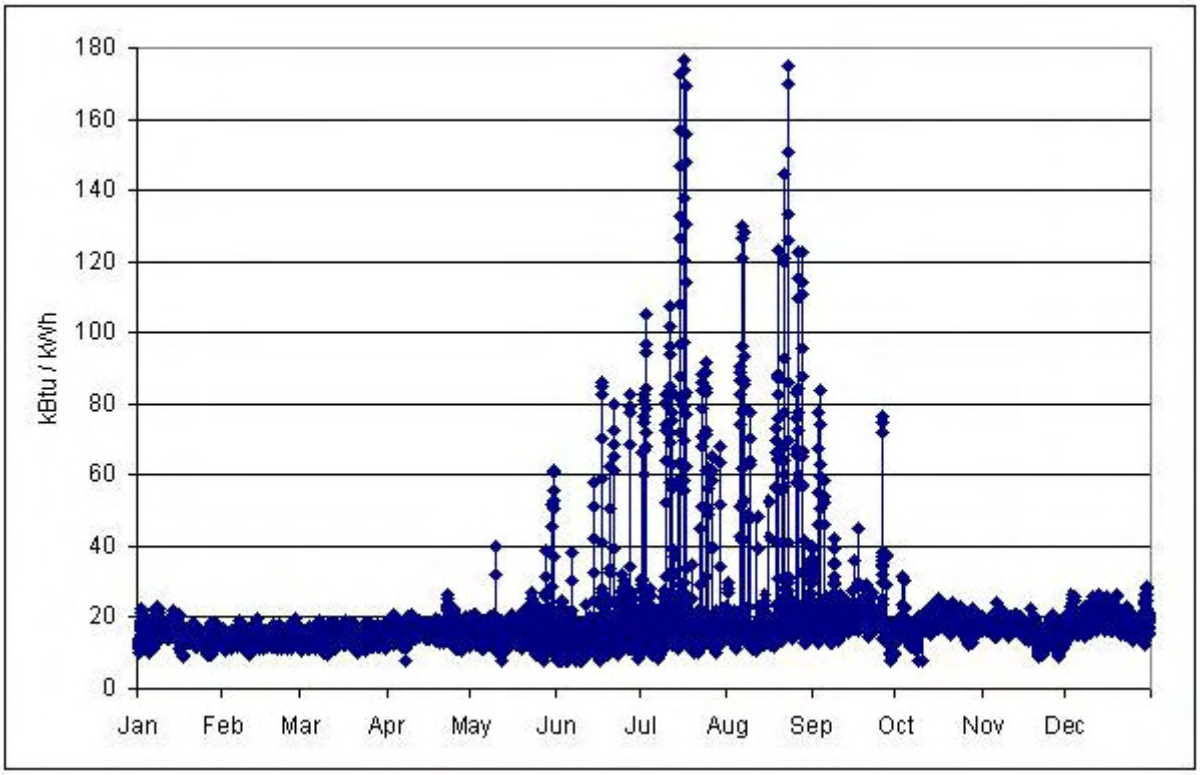

Figure ~~III~~3-3 – Nonresidential Electricity – Climate Zone 12 – Annual

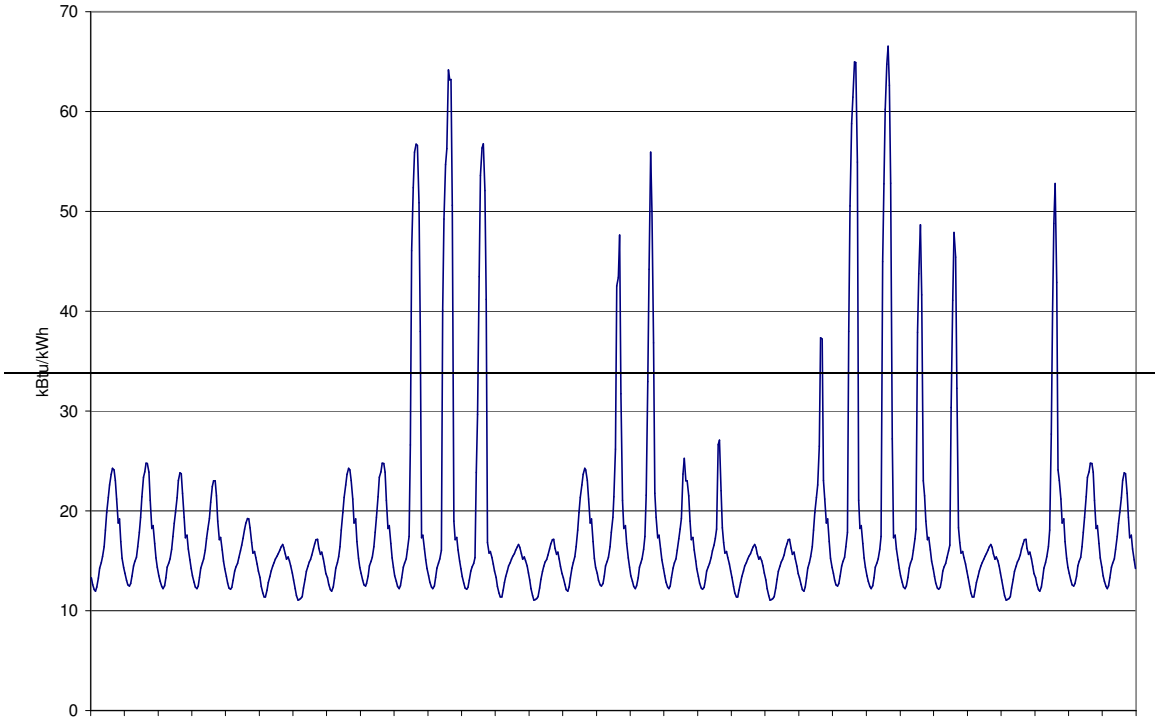

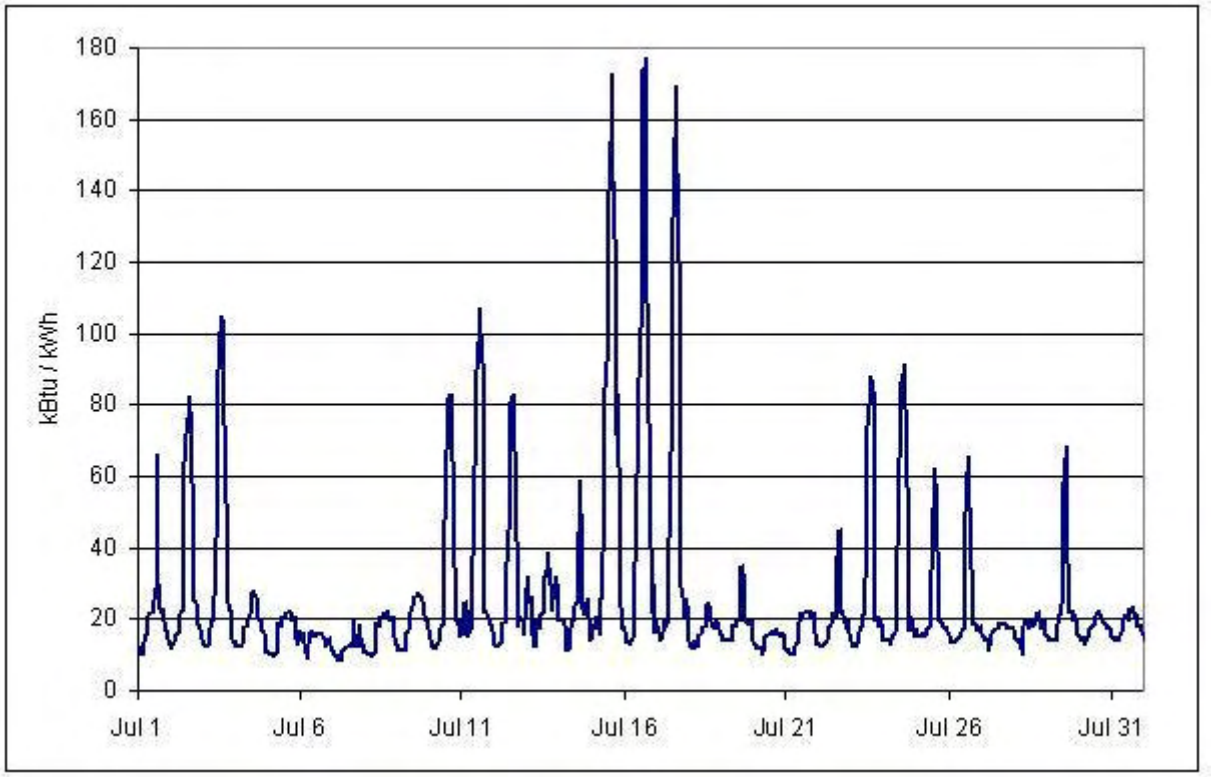

Figure ~~III~~3-4 – Nonresidential Electricity – Climate Zone 12 – July

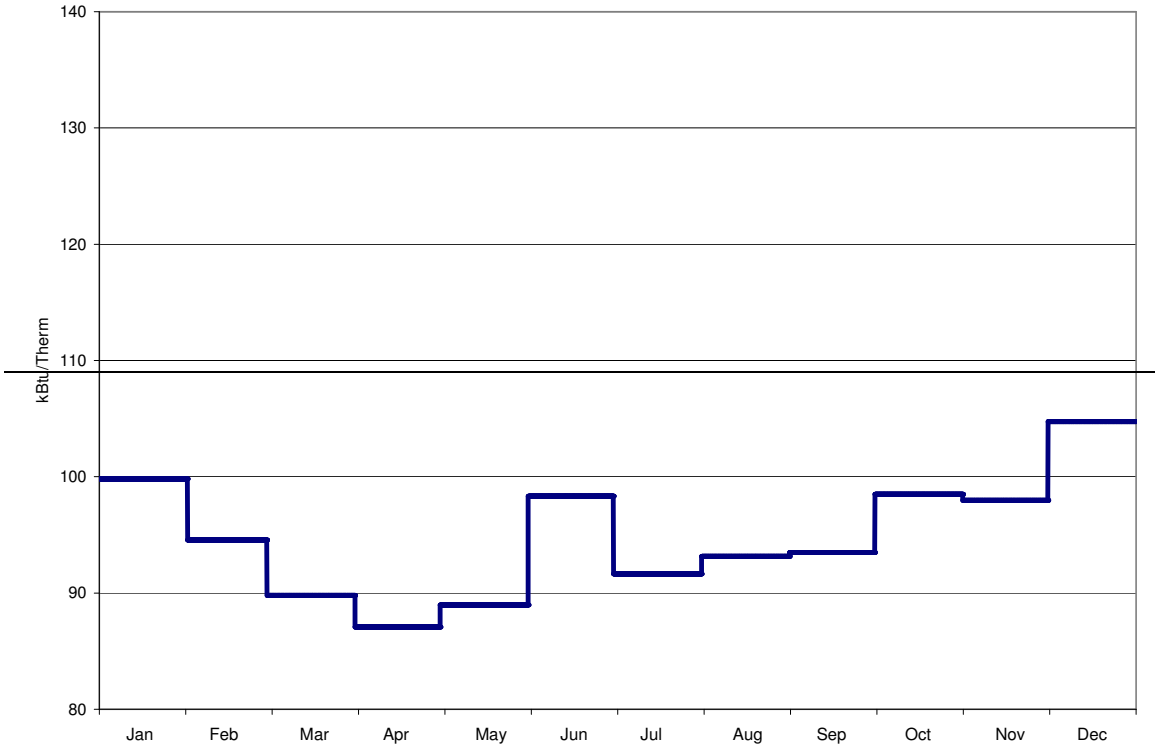

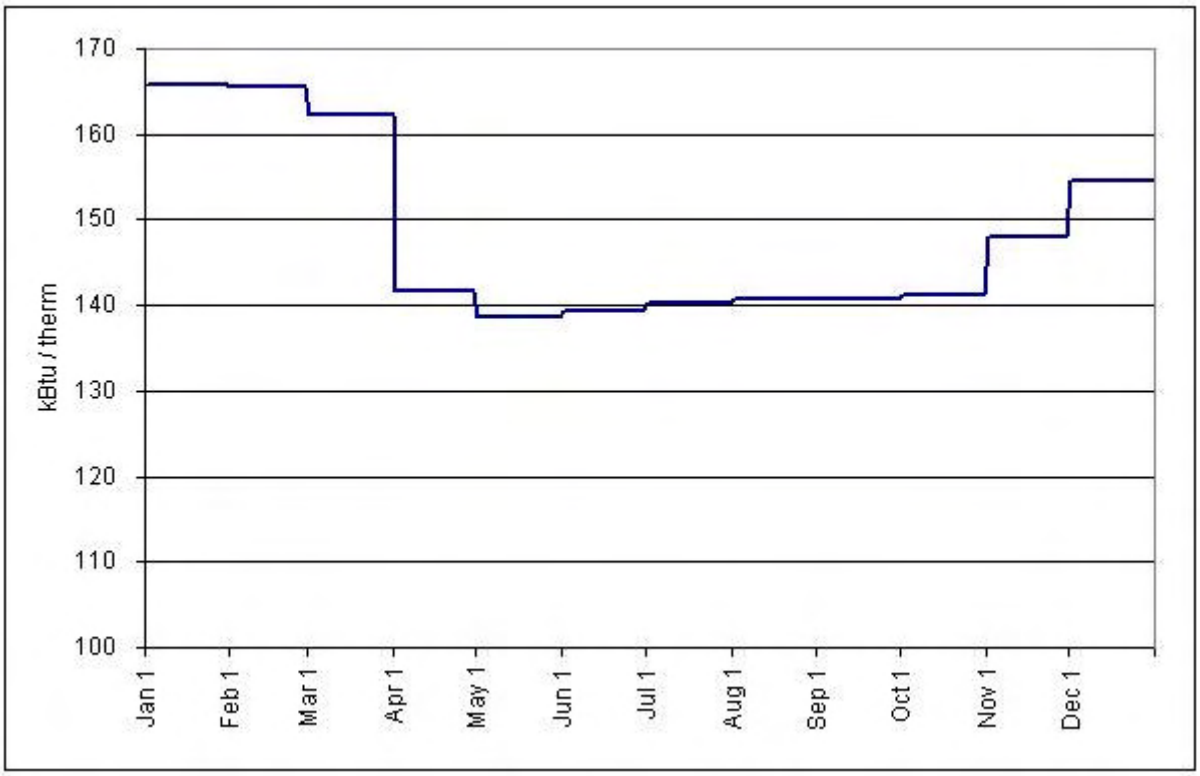

Figure ~~III~~3-5 – Residential Natural Gas – Climate Zone 12 – Annual

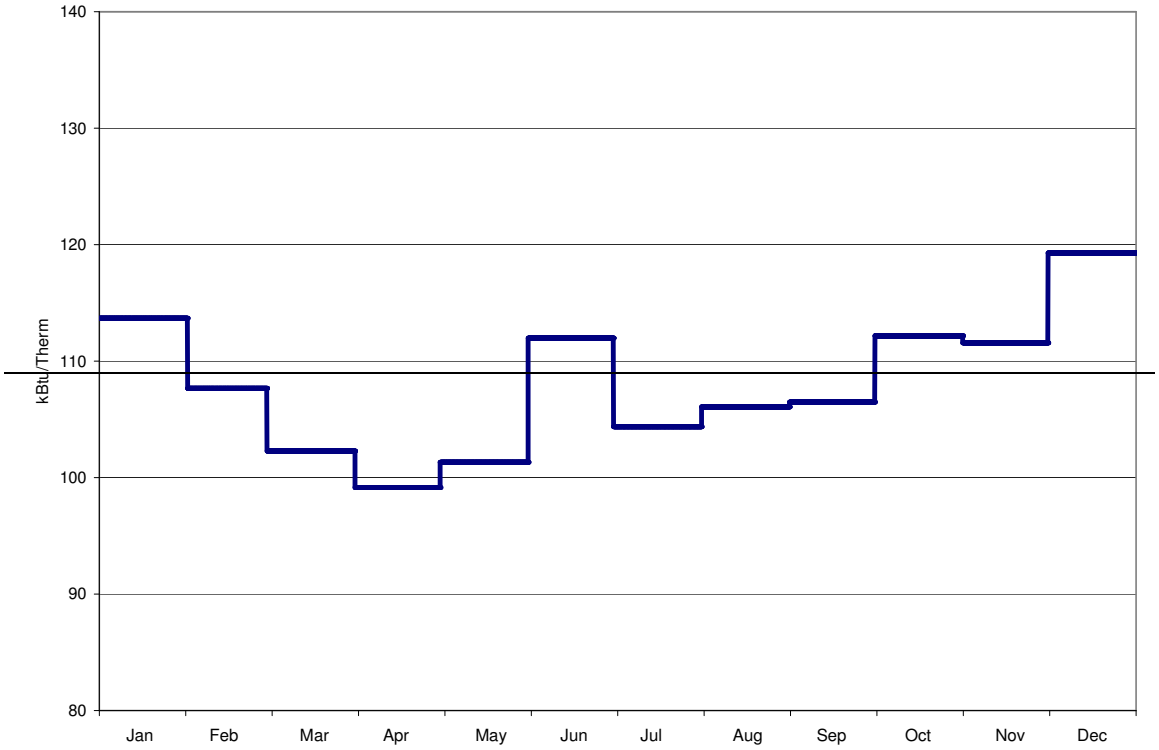

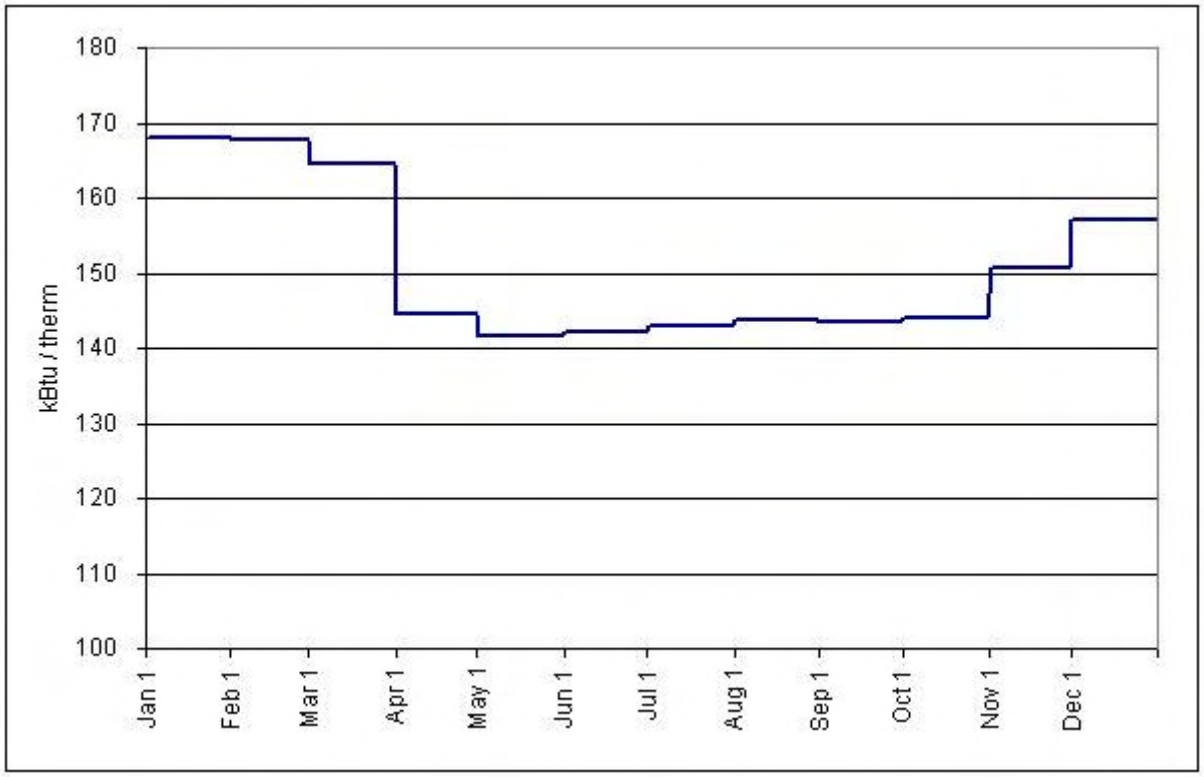

Figure ~~III~~3-6 – Nonresidential Natural Gas – Climate Zone 12 – Annual

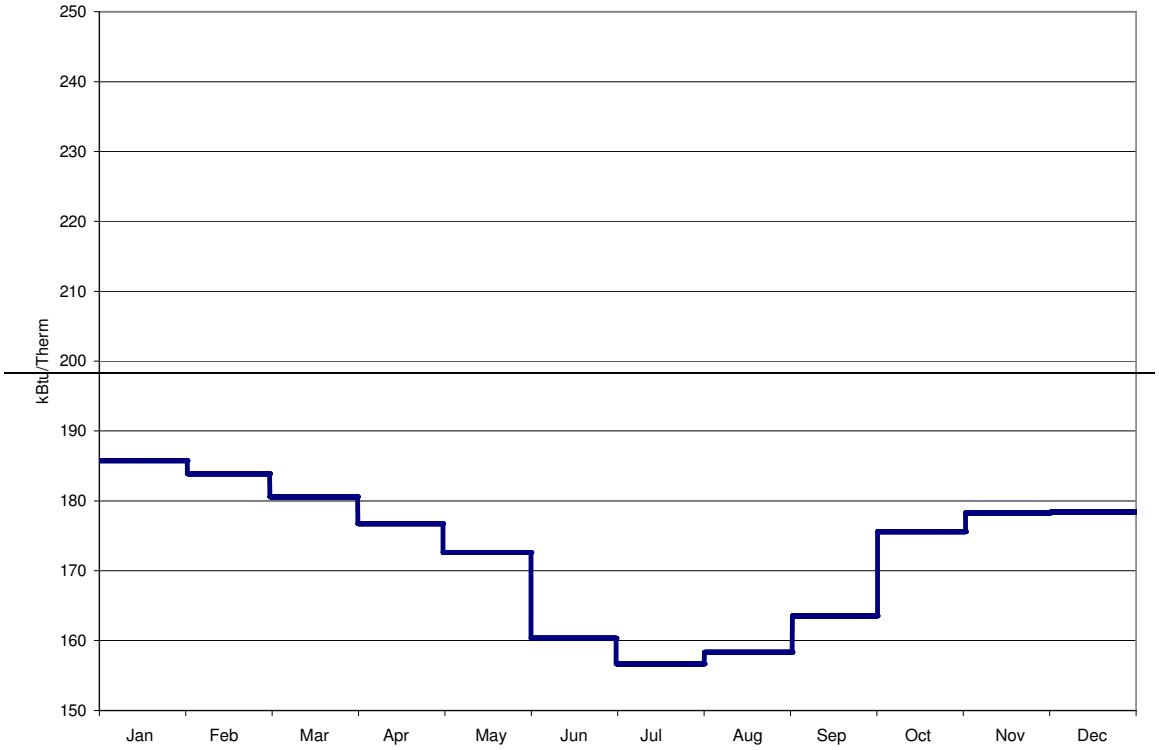

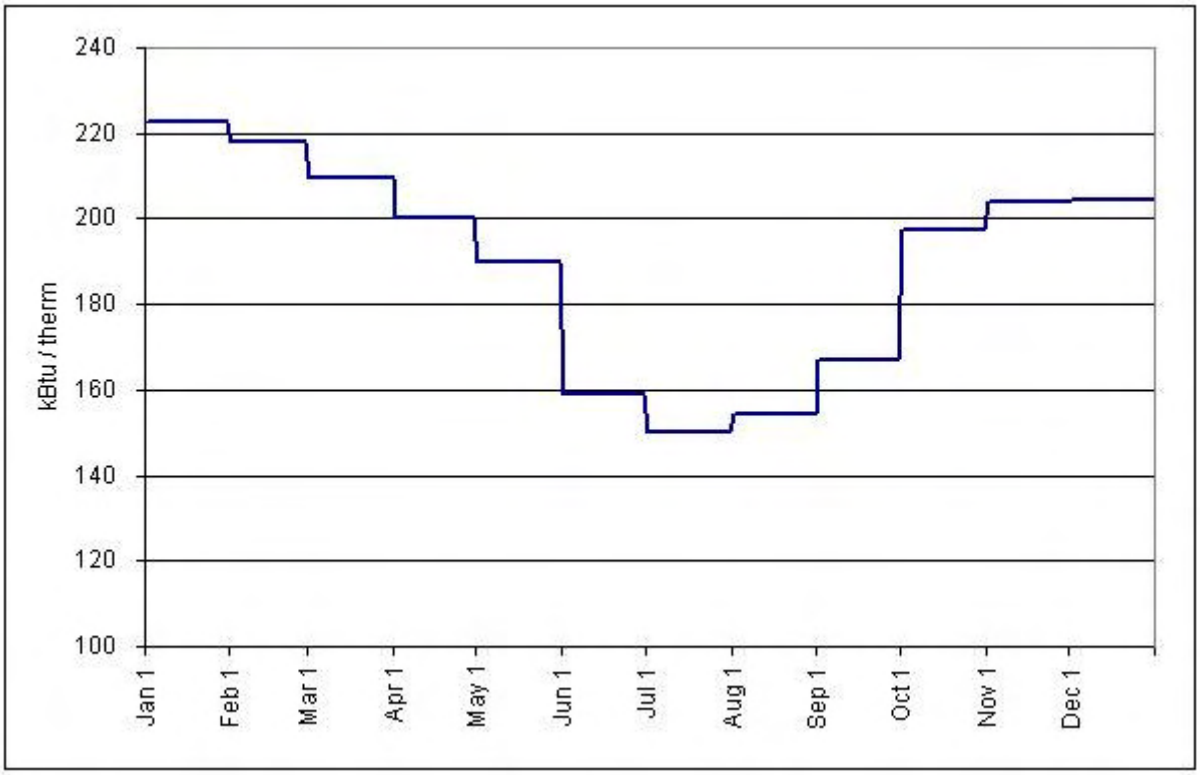

Figure ~~III~~3-7 – Residential Propane – Climate Zone 12 – Annual

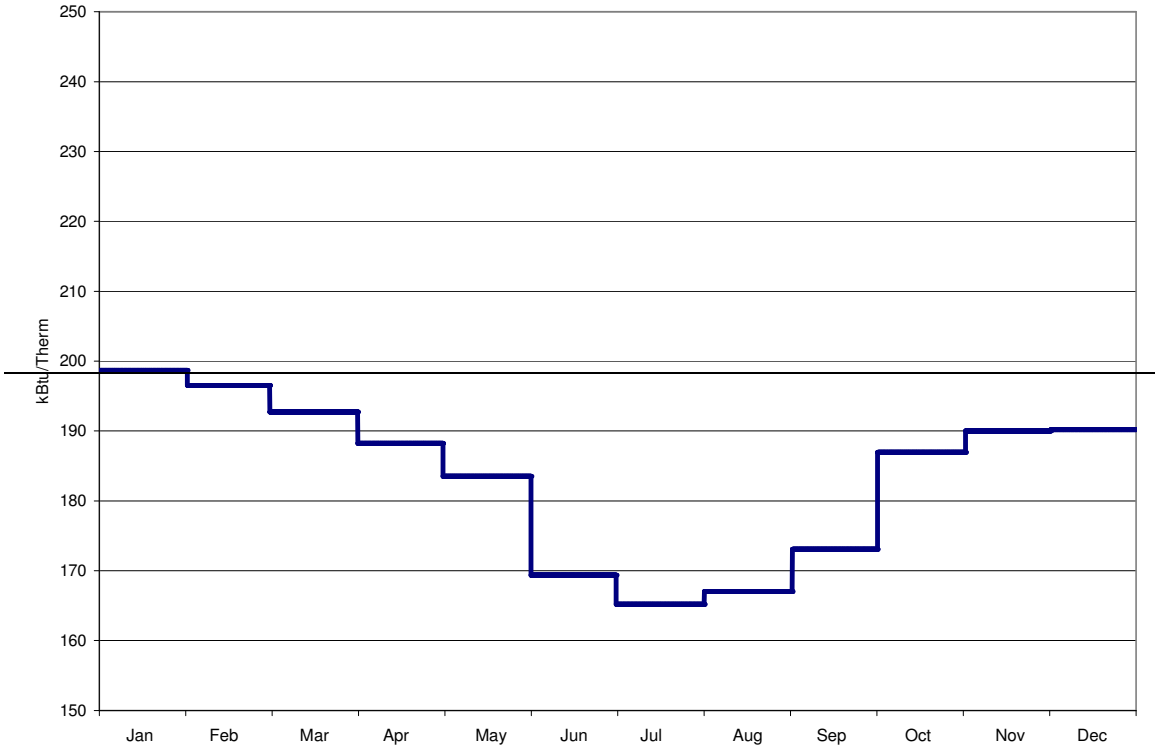

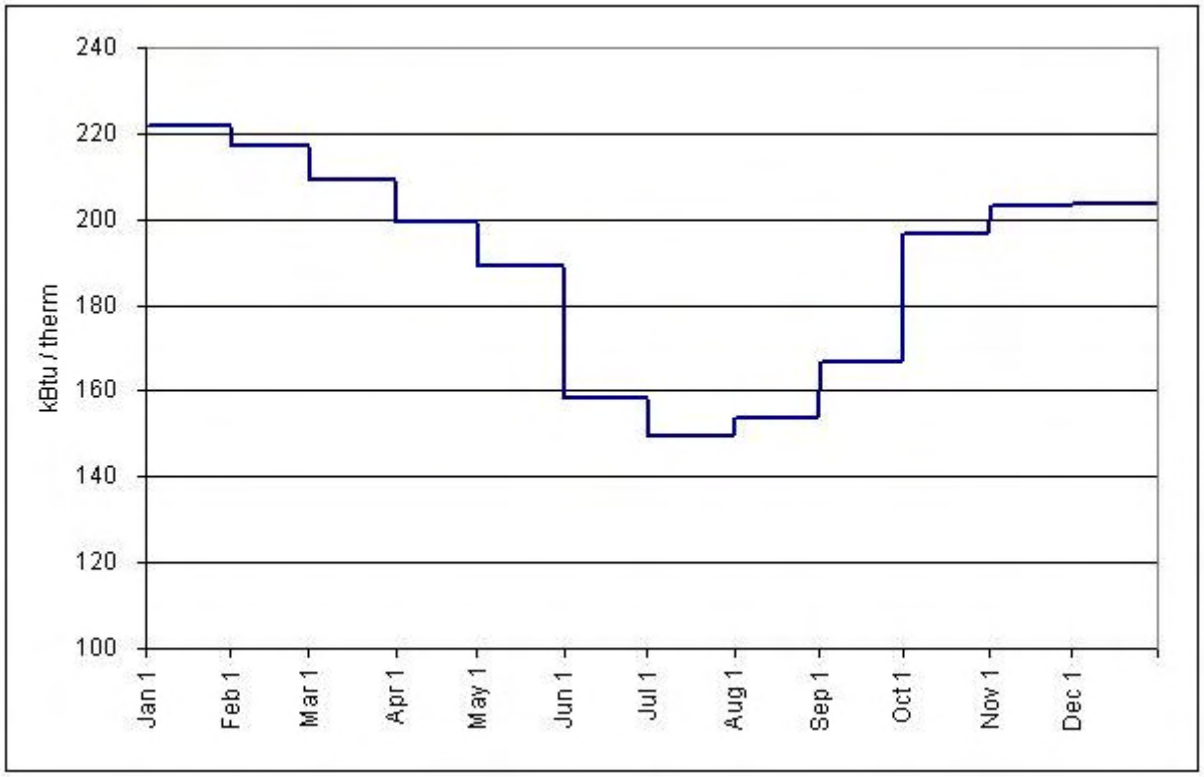

Figure ~~III~~3-8 – Nonresidential Propane – Climate Zone 12 – Annual

JA3.3 Hourly Emissions Data

Through the development of time dependent valuation hourly data for the 2008 Standards, hourly emissions rates were also determined. Hourly emission rates were not determined by climate zone, but instead by Northern and Southern California regions.

Table 3-4 – Hourly Emissions Summary for Electricity Use

	Climate Zones (6, 7, 8, 9, 10, 15)			Climate Zones (1, 2, 3, 4, 5, 11, 12, 13, 16)		
	lbs/MWh Nox	lbs/MWh PM10	Tons/MWh CO2	lbs/MWh Nox	lbs/MWh PM10	Tons/MWh CO2
Max	0.2746	0.0985	0.8190	0.2746	0.0985	0.8190
Min	0.0541	0.0525	0.3650	0.0541	0.0525	0.3650
Average	0.1030	0.0627	0.4656	0.0993	0.0619	0.4579

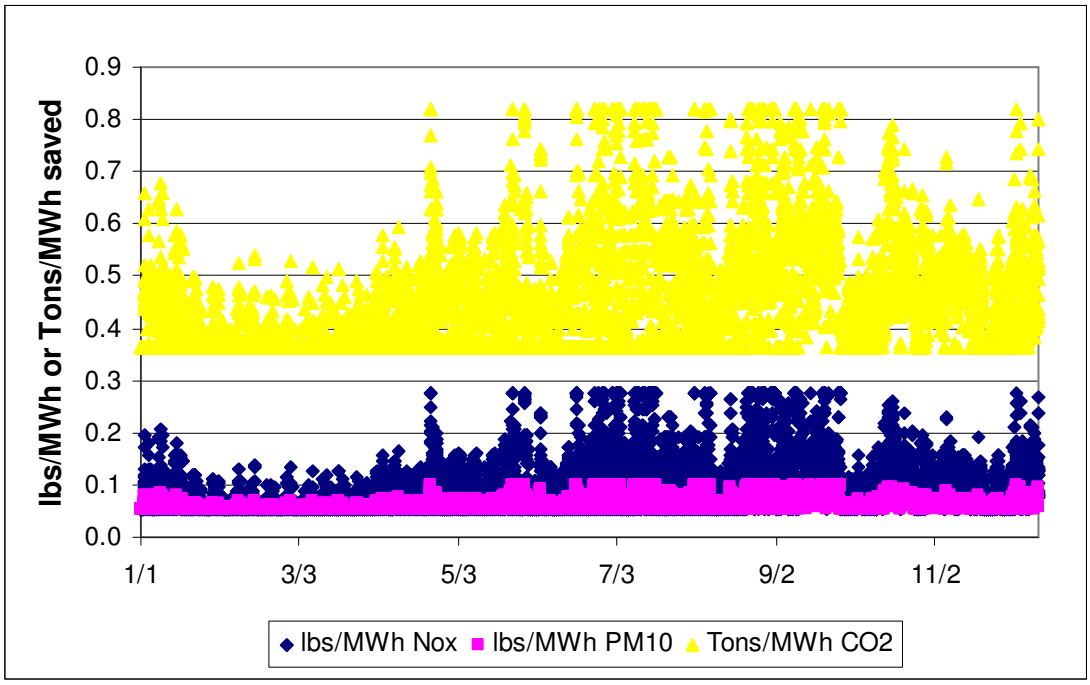

Figure 3-9 – Hourly Emissions Rates for Northern California (CZ 1-5, 11-13, 16)

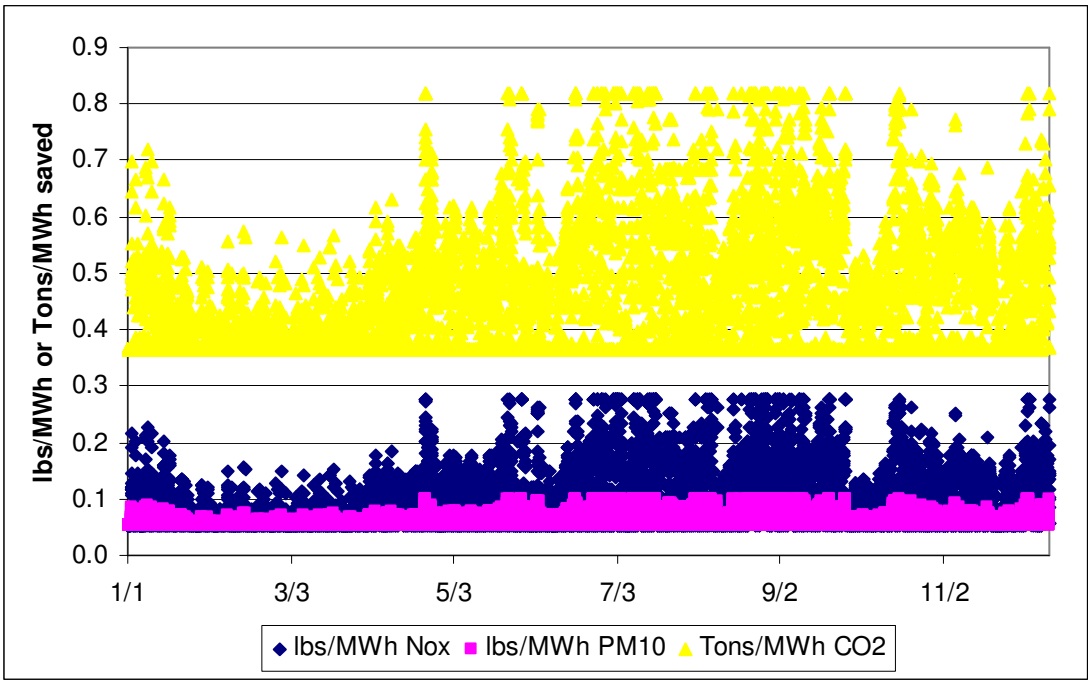

Figure 3-10 – Hourly Emissions Rates for Southern California (CZ 6-10, 15)

Joint Appendix JA4 – 2008

Appendix JA4 – U-factor, C-factor, and Thermal Mass Data

Table of Contents

4.1 Scope and Purpose 2
4.1.1 Introduction 2
4.1.2 California Energy Commission Approved Software 2
Accounting for Continuous Insulation R-value 3
Accounting for Unusual Construction Layers 4
Double Walls 5
4.1.3 Tapered Insulation 5
4.1.4 Insulating Layers on Mass and Other Walls 5
4.1.5 Wood Based Sheathing R-values 6
4.1.6 Framing Percentages for Calculating U-factors 6
4.2 Roofs and Ceilings 7
Table 4.2.1 – U-factors of Wood Framed Attic Roofs 7
Table 4.2.3 – U-factors of Structurally Insulated Panels (SIPS) Roof/Ceilings 12
Table 4.2.4 – U-factors of Metal Framed Attic Roofs 14
Table 4.2.5 – U-factors of Metal Framed Rafter Roofs 16
Table 4.2.6 –U-factors for Span Deck and Concrete Roofs 19
Table 4.2.7 – U-factors for Metal Building Roofs 21
Table 4.2.8 – U-factors for Insulated Ceiling with Removable Panels 23
4.3 Walls 25
Table 4.3.1 – U-factors of Wood Framed Walls 25
Table 4.3.2 – U-factors of Structurally Insulated Wall Panels (SIPS) 27
Table 4.3.3 – U-factors of Metal Framed Walls for Nonresidential Construction 29
Table 4.3.4 – U-factors of Metal Framed Walls for Residential Construction 32
Table 4.3.5 – Properties of Hollow Unit Masonry Walls 34
Table 4.3.6 – Properties of Solid Unit Masonry and Solid Concrete Walls 36
Table 4.3.7 – Properties of Concrete Sandwich Panels 38
Table 4.3.9 – U-factors for Metal Building Walls 43
Table 4.3.10 – U-factors for Insulated Metal Panel Walls 45
Table 4.3.11 – Thermal Properties of Log Home Walls 46
Table 4.3.12 – Thermal and Mass Properties of Straw Bale Walls 47
Table 4.3.13 – Effective R-values for Interior or Exterior Insulation Layers 48
4.4 Floors and Slabs 50
Table 4.4.1 – Standard U-factors for Wood-Framed Floors with a Crawl Space 50
Table 4.4.2 – Standard U-factors for Wood Framed Floors without a Crawl Space 52
Table 4.4.3 – Standard U-factors for Wood Foam Panel (SIP) Floors 54
Table 4.4.4 – Standard U-factors for Metal-Framed Floors with a Crawl Space 56
Table 4.4.5 – Standard U-factors for Metal-Framed Floors without a Crawl Space 58
Table 4.4.6 – Standard U-factors for Concrete Raised Floors 60
Table 4.4.7 – F-Factors for Unheated Slab-on-Grade Floors 62
Table 4.4.8 – F-Factors for Heated Slab-on-Grade Floors 63
4.5 Miscellaneous Construction 64
Table 4.5.1 – Opaque Doors 64
4.6 Modeling Constructions in the Nonresidential ACM 65
4.6.1 DOE-2 Material Codes 65
4.6.2 Framing/Insulation Layer 65
4.6.3 Thermal Mass Properties 65

4.6.4 Metal Buildings 65
4.6.5 Slabs..... 65
Table 4.6.2 – Rules for Calculating Mass Thermal Properties From Published Values 67

4.1 Scope and Purpose

4.1.1 Introduction

The values in this appendix must be used for all residential and nonresidential compliance calculations: prescriptive, overall envelope, and whole building performance. CEC Approved compliance software may make adjustments to the values in these tables using procedures described in this appendix.

The data tables are organized first by roofs, walls, and floors. For each, the data is further organized by construction type, beginning with wood framed construction, followed by metal framed construction, concrete and special construction assemblies. Each table features a letter/number coordinate system (shaded in gray) that can be used as an identifier for each value, i.e. 4.2-A10 indicates Table 4.2, Column A, Row 10. Construction assembly descriptions shall be concatenated first by row and then by column. For example, the descriptions of 4.1-A17 and 4.9-H3 and shall be as follows (abbreviations are acceptable):

Wood Framed Attic, Trusses@24 inch. OC, R-30 attic insulation, No continuous insulation
Wood Framed Wall, Wd 2x4 @16 inch OC, R-13 cavity insulation, R-14 continuous insulation

If a construction assembly is not adequately represented in the tables below, the permit applicant or the manufacturer of the product may request approval from the California Energy Commission. The California Energy Commission Executive Director will grant such approval, after reviewing submittals from the applicant. New constructions that are approved by the Executive Director will be published as an addendum to this appendix for use by all compliance authors. Addenda may consist of new tables or additional rows or columns to existing tables.

4.1.2 California Energy Commission Approved Software

California Energy Commission approved software used for performance or prescriptive calculations may make adjustments to the data contained in this appendix to account for the special circumstances of particular constructions. This section defines the rules for making these adjustments. These adjustments may not be made when the tables are used manually. Software may have input screens where the user may choose a construction by entering the cavity insulation (or insulation penetrated by framing); the continuous insulation; and other factors such as framing spacing. To the software user, the process of using these tables may look very much like a traditional U-factor calculation.

Accounting for Continuous Insulation R-value

Many of the tables in this appendix have columns for varying levels of continuous insulation. Continuous insulation is insulation that is uninterrupted by framing and provides a continuous insulating layer. Limits on the position of the continuous insulation and other factors are specified in each table. When data from a table is used manually, the R-value of the continuous insulation in the proposed construction shall be equal to or greater than the R-value shown in the column heading; no interpolation is permitted. California Energy Commission approved software used for performance or prescriptive calculations may account for any amount of continuous insulation using Equation 4-1. This adjustment may not be used, however, for continuous insulation with thermal resistance less than R-2.

$$U_{With.Cont.Insul} = \frac{1}{\frac{1}{U_{Col.A}} + R_{Cont.Insul}} \qquad \text{Equation 4-1}$$

where

$U_{With.Cont.Insul}$ Calculated U-factor of the construction assembly with a specific R-value of continuous insulation.

$U_{Col.A}$ A U-factor selected from column A.

$R_{Cont.Insul}$ The R-value of continuous insulation.

If insulation layers are added that are interrupted by furring strips, then the effective R-values from Table 4. 3.13 shall be used in Equation 4-1.

Accounting for Unusual Construction Layers

The assumptions that are the basis of the U-factors published in this appendix are documented in the paragraphs following each table. CEC approved software used for prescriptive or performance calculations may be used to make adjustments to these assumptions based on data entered by the software user. Adjustments may only be made, however, when the total R-value of the proposed construction is at least an R-2 greater than the documented assumption. Each table includes the assumptions used to determine the U-factors.

Equation 4-2 shall be used to make these adjustments.

$$U_{Proposed} = \frac{1}{\frac{1}{U_{With.Cont.Insul}} + \Delta R_{Assumed}} \qquad \text{Equation 4-2}$$

where

$U_{Proposed}$ Calculated U-factor of the proposed construction assembly.

$U_{With.Cont.Insul}$ The U-factor adjusted for continuous insulation using Equation 4-1.

$\Delta R_{Assumed}$ The difference in R-value between what was assumed in the table and the proposed construction for a continuous layer.

There are limits, however, on the types of adjustments that can be made.

- The difference in resistance shall be at least R-2. When calculating the difference in R-value, no changes in assumptions shall be made to the framing/insulation layer; the proposed construction shall assume the same values as the table.
- The thermal resistance of air layers shall be taken from the 2005 ASHRAE Handbook of Fundamentals, for a mean temperature of 50°F, a temperature difference of 20 °F and an effective emittance of 0.82.
- R-values for air layers for roof and ceiling assemblies shall be based on heat flow up. R-values for air layers for floor assemblies shall be based on heat flow down. R-values for other assemblies shall be based on horizontal heat flow. Air layers must be sealed on edges to prevent air layer mixing with ambient air.
- One additional air gap may be credited, but not air gaps that are within the framing insulation cavity layer; these are already accounted for in the published data. Air gaps of less than 0.5 inch thickness shall be considered to have an R-value of zero. An example of an acceptable additional air gap would be the space between a brick veneer and the sheathing on the framed wall.

Double Walls

The U-factor of double walls or other double assemblies may be determined by combining the U-factors from the individual construction assemblies that make up the double wall. The following equation shall be used.

$$U_{Combined} = \frac{1}{\frac{1}{U_1} + \frac{1}{U_2}}$$ Equation 4-3

4.1.3 Tapered Insulation

If continuous roof insulation is tapered for drainage or other purposes, then the user may determine the overall U-factor in one of two ways:

- To determine the U-factor for the roof at the location where the insulation is at a minimum and where it is at a maximum. Take the average of these two U-factors. With the R-value compliance approach (prescriptive method only), calculate the R-value as the inverse of the average U-factor as determined above. R-values may not be averaged. Divide the roof into sub-areas for each one-inch increment of insulation and determine the U-factor of each sub-area. This approach may only be used with the performance method, and in this case, each sub area shall be modeled as a separate surface.

When roofs have a drain located near the center and when tapered insulation creates a slope to the drain, the surface area at the maximum insulation thickness will be significantly greater than the surface area at the minimum thickness, so the second method will give a more accurate result. The first method yields a conservative estimate for roofs with central drains.

4.1.4 Insulating Layers on Mass and Other Walls

The data in Table 4.3.13 may be used to modify the U-factors and C-factors from Table 4.3.5, Table 4.3.6, and Table 4.3.7 when an additional layer is added to the inside or outside of the mass wall. For exterior insulation finish systems (EIFS) or other insulation only systems, values should be selected from row 26 of Table 4.19 In these cases, the R-value of the layer is equal to the R-value of the insulation. The other choices from this table represent systems typically placed on the inside of mass walls. The following equations calculate the total U-factor or C-factor, where U_{mass} and C_{mass} are selected from Table 4.3.5, Table 4.3.6, or Table 4.3.7 and $R_{Outside}$ and R_{Inside} are selected from Table 4.3.13. $R_{outside}$ is selected from row 26 while R_{inside} is selected from rows 1 through 25.

$$U_{Total} = \frac{1}{R_{Outside} + \frac{1}{U_{Mass}} + R_{Inside}}$$ Equation 4-4

$$C_{Total} = \frac{1}{R_{Outside} + \frac{1}{C_{Mass}} + R_{Inside}}$$ Equation 4-5

The values from Table 4.3.13 may be used to modify the U-factors of other construction assemblies as well, when non-homogeneous layers are added (see Equation 4-1).

4.1.5 Wood Based Sheathing R-values

For the purpose of calculations for the Joint Appendices plywood, particle board, oriented strand board (OSB) and similar sheathing materials will all be considered Wood Based Sheathing. A single R-value will be used for each thickness listed regardless of the material. This approach simplifies calculations yet has little effect on the overall R-value of assemblies since the differences in sheathing R-value are minimal compared to the overall assembly.

R-values for Wood Based Sheathing

Thickness	R-value (ft^2-hr ^oF/Btu)
3/8 inch	0.36
1/2 inch	0.48
5/8 inch	0.60
3/4 inch	0.72
1 inch	0.96
1 1/4 inch	1.20

4.1.6 Framing Percentages for Calculating U-factors

Table 4.1.1 – Framing Percentages

Assembly Type	Framing Spacing	Framing Percentage
Walls	16"o.c.	25 %
	24"o.c.	22 %
	48"o.c.	4 %
Walls Metal	16"o.c.	15%
	24"o.c.	12%
Floors	16"o.c.	10 %
	24"o.c.	7 %
Roofs	16"o.c.	10 %
	24"o.c.	7 %
	48"o.c.	4 %

4.2 Roofs and Ceilings

Table 4.2.1 – U-factors of Wood Framed Attic Roofs

Truss Spacing	R-value of Attic Insulation		Rated R-value of Continuous Insulation[1]							
			None	R-2	R-4	R-6	R-7	R-8	R-10	R-14
			A	B	C	D	E	F	G	H
16 in. OC	None	1	0.300	0.187	0.136	0.107	0.097	0.088	0.075	0.058
	R-11	2	0.079	0.068	0.060	0.053	0.051	0.048	0.044	0.037
	R-13	3	0.071	0.062	0.055	0.050	0.047	0.045	0.041	0.036
	R-19	4	0.049	0.045	0.041	0.038	0.037	0.035	0.033	0.029
	R-21	5	0.042	0.039	0.036	0.034	0.032	0.031	0.030	0.026
	R-22	6	0.043	0.039	0.037	0.034	0.033	0.032	0.030	0.027
	R-25	7	0.038	0.035	0.033	0.031	0.030	0.029	0.028	0.025
	R-30	8	0.032	0.030	0.028	0.027	0.026	0.025	0.024	0.022
	R-38	9	0.026	0.024	0.023	0.022	0.022	0.021	0.020	0.019
	R-44	10	0.021	0.020	0.019	0.019	0.018	0.018	0.017	0.016
	R-49	11	0.020	0.019	0.019	0.018	0.018	0.017	0.017	0.016
	R-60	12	0.017	0.016	0.016	0.015	0.015	0.015	0.014	0.013
24 in. OC	None	13	0.305	0.189	0.137	0.108	0.097	0.089	0.075	0.058
	R-11	14	0.076	0.066	0.058	0.052	0.050	0.047	0.043	0.037
	R-13	15	0.068	0.060	0.054	0.048	0.046	0.044	0.041	0.035
	R-19	16	0.048	0.043	0.040	0.037	0.036	0.034	0.032	0.029
	R-21	17	0.043	0.040	0.037	0.034	0.033	0.032	0.030	0.027
	R-22	18	0.041	0.038	0.036	0.033	0.032	0.031	0.029	0.026
	R-25	19	0.037	0.034	0.032	0.030	0.029	0.028	0.027	0.024
	R-30	20	0.031	0.029	0.028	0.026	0.025	0.025	0.024	0.022
	R-38	21	0.025	0.024	0.023	0.022	0.021	0.021	0.020	0.018
	R-44	22	0.021	0.020	0.019	0.019	0.018	0.018	0.017	0.016
	R-49	23	0.019	0.019	0.018	0.017	0.017	0.017	0.016	0.015
	R-60	24	0.016	0.016	0.015	0.015	0.014	0.014	0.014	0.013

Notes:

1. Continuous insulation shall be located at the ceiling, below the bottom chord of the truss and be uninterrupted by framing.

2. In climate zones 1 and 16 the insulating R-value of continuous insulation materials installed above the roofs waterproof membrane shall be multiplied by 0.8 before choosing the table column for determining assembly U-factor.

This table contains thermal performance data (U-factors) for wood framed attics where the ceiling provides the air barrier and the attic is ventilated. Wood trusses are the most common construction for low-rise residential buildings and for Type V nonresidential buildings. While the sketch shows a truss system with a flat ceiling, the data in this table may be used for scissor trusses and other non-flat trusses. If the bottom chord is not flat, then the slope should not exceed 3:12 for nonadhesive binder blown insulation. This table may also be used with composite trusses that have a wood top and bottom chord and metal struts connecting them.

For the majority of cases, values will be selected from column A of this table. Column A shall be used for the common situation where either batt or blown insulation is placed directly over the ceiling (and tapered at the edges). Builders or designers may increase thermal performance by adding a continuous insulation layer at the ceiling. The continuous insulation is typically a rigid polystyrene or polyisocyanurate foam insulation. Continuous insulation does not include the blown or batt insulation that is over the bottom chord of the truss (this is already accounted for in the U-factors published in Column A).

When this table is used manually, the R-value of continuous insulation shall be equal to or greater than the R-value published in the continuous insulation columns. For instance if the insulation is R-3, the R-2 columnshall be used. No interpolation is permitted when data from the table is selected manually. CEC approved compliance software, including those used for prescriptive compliance, may accurately account for any amount of continuous insulation or for unusual construction assemblies using Equation 4-1 and Equation 4-2.

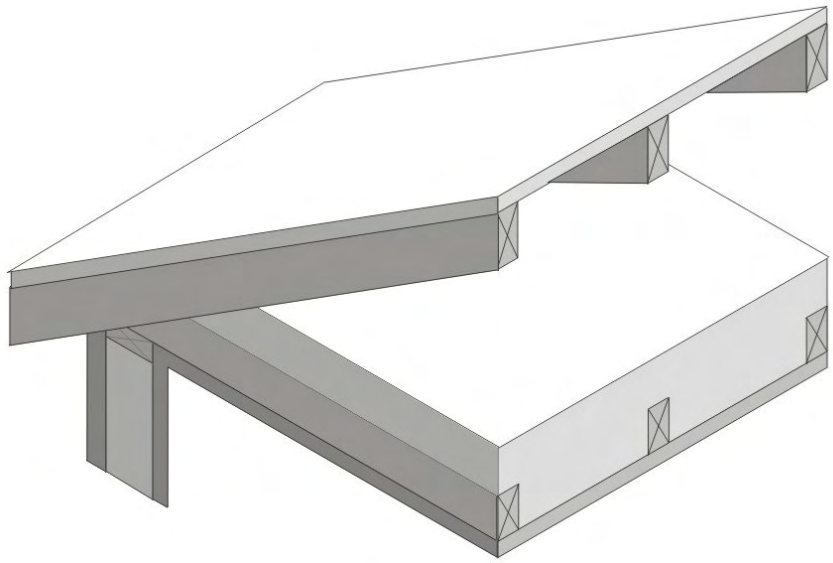

Figure 4.2.1 – Wood Framed Attic Roofs

This table shall not be used for cases where insulation is located at the roof of the attic. There are two situations where this may be done. Foamed plastic may be sprayed onto the top chord of the trusses and onto the bottom of the upper structural deck (roof). The foam expands and cures to provide an airtight barrier and continuous insulation. Another case is where a plastic membrane or netting is installed above the ceiling, (hanging below the roof deck) and either batt or blown insulation is installed over the netting. In both of these cases, the attic is sealed (not ventilated). There are a number of issues related to these insulation techniques and special CEC approval is required.

Assumptions: These data are calculated using the parallel path method documented in the 2005 ASHRAE Handbook of Fundamentals. These calculations assume an exterior air film of R-0.17, asphalt shingles of R-0.44 (AR02), building paper of R-0.06 (BP01), ½ inch of wood based sheathing (Custom), an attic air space (greater than 3.5 inch) with a R-0.80, the insulation / framing layer, continuous insulation (if any) 1/2 inch gypsum board (GP01) of R-0.45, and an interior air film (heat flow up) of R-0.61. Wood 2x4 framing is assumed at the ceiling level. R-13 of attic insulation is assumed between the framing members; above that level, attic insulation is uninterrupted by framing. The framing percentage is assumed to be 10 percent for 16 inch oncenter and 7 percent for 24 inch oncenter. 7.25 percent of the attic insulation above the framing members is assumed to be at half depth, due to decreased depth of insulation at the eaves.

Table 4.2.2 – U-factors of Wood Framed Rafter Roofs

Rafter Spacing	R-value of Cavity Insulation	Nominal Framing Size		Rated R-value of Continuous Insulation[6]							
				None	R-2	R-4	R-6	R-7	R-8	R-10	R-14
				A	B	C	D	E	F	G	H
16 in. OC	None	Any	1	0.297	0.186	0.136	0.107	0.096	0.088	0.075	0.058
	R-11[2]	2x4	2	0.084	0.072	0.063	0.056	0.053	0.050	0.046	0.039
	R-13[2]	2x4	3	0.075	0.065	0.058	0.052	0.049	0.047	0.043	0.037
	R-15[2]	2x4	4	0.068	0.060	0.053	0.048	0.046	0.044	0.040	0.035
	R-19[2]	2x4	5	0.075	0.065	0.058	0.052	0.049	0.047	0.043	0.037
	R-19[2,3]	2x4	6	0.062	0.055	0.050	0.045	0.043	0.041	0.038	0.033
	R-11	2x6	7	0.076	0.066	0.058	0.052	0.050	0.047	0.043	0.037
	R-13	2x6	8	0.069	0.061	0.054	0.049	0.047	0.044	0.041	0.035
	R-15	2x6	9	0.062	0.055	0.050	0.045	0.043	0.041	0.038	0.033
	R-19[2]	2x6	10	0.056	0.050	0.046	0.042	0.040	0.039	0.036	0.031
	R-21[2]	2x6	11	0.052	0.047	0.043	0.040	0.038	0.037	0.034	0.030
	R-19[2]	2x8	12	0.051	0.046	0.042	0.039	0.038	0.036	0.034	0.030
	R-21	2x8	13	0.048	0.044	0.040	0.037	0.036	0.035	0.032	0.029
	R-22	2x10	14	0.044	0.040	0.037	0.035	0.034	0.033	0.031	0.027
	R-25	2x10	15	0.041	0.038	0.035	0.033	0.032	0.031	0.029	0.026
	R-30[4]	2x10	16	0.036	0.034	0.031	0.030	0.029	0.028	0.026	0.024
	R-30	2x12	17	0.035	0.033	0.031	0.029	0.028	0.027	0.026	0.023
	R-38[4]	2x12	18	0.029	0.027	0.026	0.025	0.024	0.024	0.022	0.021
	R-38[4]	2x14	19	0.028	0.027	0.025	0.024	0.023	0.023	0.022	0.020
	Sprayed Foam or Cellulose Insulation[2,5]	2x4	20	0.074	0.064	0.057	0.051	0.049	0.046	0.043	0.036
		2x6	21	0.052	0.047	0.043	0.040	0.038	0.037	0.034	0.030
		2x8	22	0.041	0.038	0.035	0.033	0.032	0.031	0.029	0.026
		2x10	23	0.033	0.031	0.029	0.028	0.027	0.026	0.025	0.023
		2x12	24	0.028	0.027	0.025	0.024	0.023	0.023	0.022	0.020
24 in. OC	None	Any	25	0.237	0.161	0.122	0.098	0.089	0.082	0.070	0.055
	R-11[2]	2x4	26	0.081	0.070	0.061	0.055	0.052	0.049	0.045	0.038
	R-13[2]	2x4	27	0.072	0.063	0.056	0.050	0.048	0.046	0.042	0.036
	R-15[2]	2x4	28	0.065	0.058	0.052	0.047	0.045	0.043	0.039	0.034
	R-19[2]	2x4	29	0.072	0.063	0.056	0.050	0.048	0.046	0.042	0.036
	R-19[2,3]	2x4	30	0.059	0.053	0.048	0.044	0.042	0.040	0.037	0.032
	R-11	2x6	31	0.075	0.065	0.058	0.052	0.049	0.047	0.043	0.037
	R-13	2x6	32	0.067	0.059	0.053	0.048	0.046	0.044	0.040	0.035
	R-15[2]	2x6	33	0.060	0.054	0.048	0.044	0.042	0.041	0.038	0.033
	R-19[2]	2x6	34	0.054	0.049	0.044	0.041	0.039	0.038	0.035	0.031
	R-21[2]	2x6	35	0.049	0.045	0.041	0.038	0.036	0.035	0.033	0.029
	R-19[2]	2x8	36	0.049	0.045	0.041	0.038	0.036	0.035	0.033	0.029
	R-21	2x8	37	0.046	0.042	0.039	0.036	0.035	0.034	0.032	0.028
	R-22	2x10	38	0.043	0.040	0.037	0.034	0.033	0.032	0.030	0.027
	R-25	2x10	39	0.039	0.036	0.034	0.032	0.031	0.030	0.028	0.025

R-30[4]	2x10	**40**	0.034	0.032	0.030	0.028	0.027	0.027	0.025	0.023
R-30	2x12	**41**	0.033	0.031	0.029	0.028	0.027	0.026	0.025	0.023
R-38 [4]	2x12	**42**	0.028	0.027	0.025	0.024	0.023	0.023	0.022	0.020
R-38[4]	2x14	**43**	0.027	0.026	0.024	0.023	0.023	0.022	0.021	0.020
Sprayed Foam or Cellulose Insulation[2,5]	2x4	**44**	0.071	0.062	0.055	0.050	0.047	0.045	0.042	0.036
	2x6	**45**	0.050	0.045	0.042	0.038	0.037	0.036	0.033	0.029
	2x8	**46**	0.039	0.036	0.034	0.032	0.031	0.030	0.028	0.025
	2x10	**47**	0.032	0.030	0.028	0.027	0.026	0.025	0.024	0.022
	2x12	**48**	0.026	0.025	0.024	0.022	0.022	0.022	0.021	0.019

Notes:

1. Rigid foam board used for cavity insulation must fill the entie cavity between the rafters and be sealed properly to prevent air gaps, and must be secured properly to prevent any future discrepancies in the construction assembly.

2. This assembly is only allowed where building officials approve rafter attic assemblies with no ventilation air spaces.

3. This assembly requires insulation with an R-value per inch 5.6 or larger (k-factor 1.8 or less). This is board type insulation, mostly Isocyanurate. Medium density spray polyurethane foam may also be used to meet this requirement if the quality installation procedures and documentation in Section 4.7 of Joint Appendix 4 are followed, Documentation from Directory of Certified insulation materials must be provided to show compliance with this assembly.

4. Higher density fiberglass batt is needed to achieve the indicated U-factor. R-30 must be achieved with less than 8.25 inch full thickness. R-38 must be achieved with less than 10.25 inch thickness (R-30c, R-38c).

5. Foamed plastic or cellulose insulation shall fill the entire cavity. Cellulose shall have a binder to prevent sagging. Verify that the building official in your area permits this construction, since there is no ventilation layer.

6. Continuous insulation shall be located at the ceiling or at the roof and be uninterrupted by framing . In climate zones 1 and 16 the insulating R-value of continuous insulation materials installed above the roofs waterproof membrane shall be multiplied by 0.8 before choosing the table column for determining assembly U-factor.

This table contains thermal performance data (U-factors) for wood framed rafter roofs. This is a common construction in low-rise residential buildings and in Type V nonresidential buildings. The rafters may be either flat or in a sloped application. Insulation is typically installed between the rafters. With this construction, the insulation is in contact with the ceiling and there is typically a one-inch air gap above the insulation so that moisture can be vented. Whether there is a space above the insulation depends on local climate conditions and may not be required in some building permit jurisdictions. The ventilation space requirement would have to be waived by the building official for the case of cellulose insulation or foamed plastic, since the entire cavity would be filled.

For the majority of cases, U-factors will be selected from Column A of this table; this case covers insulation placed only in the cavity. When continuous insulation is installed either at the ceiling or at the roof, then U-factors from other columns may be selected. The continuous insulation is typically a rigid polystyrene or polyisocyanurate foam insulation, but can also include mineral wool or other suitable materials.

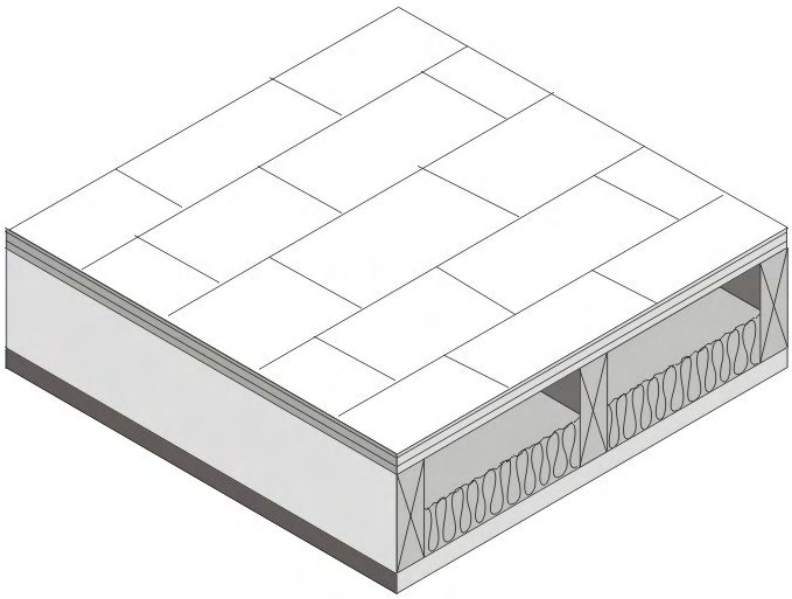

Figure4.2.2 – Wood Frame Rafter Roof

When this table is used manually, the R-value of continuous insulation shall be equal to or greater than the R-value published in the continuous insulation columns. For instance if the continuous insulation is R-3, the R-2 column shall be used. No interpolation is permitted when data from the table is used manually. CEC approved software, however, may determine the U-factor for any amount of continuous insulation and/or for layers using Equation 4-1 and Equation 4-2.

Assumptions: These data are calculated using the parallel path method documented in the 2005 ASHRAE Handbook of Fundamentals. These calculations assume an exterior air film of R-0.17, asphalt shingles of R-0.44 (AR02), building paper of R-0.06 (BP01), ½ inch of wood based sheathing (Custom), continuous insulation (optional), the insulation / framing layer with an air space of R-0.76 or R-0.80 (except for cellulose and foamed plastic), 1/2 inch gypsum of R-0.45 (GP01), and an interior air film (heat flow up diagonally) of R-0.62. The continuous insulation may also be located at the ceiling, between the drywall and the framing. The framing percentage is assumed to be 10 percent for 16 inch OC and 7 percent for 24 inch. OC. The thickness of framing members is assumed to be the actual size of 3.50, 5.50, 7.25, 9.25, and 11.25 in. for 2x4, 2x6, 2x8, 2x10, and 2x12 nominal sizes. High-density batt insulation is assumed to be 8.5 inch thick for R-30 and 10.5 inch thick for R-38. The R-value of sprayed foam and cellulose insulation is assumed to be R-3.6 per inch.

Table 4.2.3 – U-factors of Structurally Insulated Panels (SIPS) Roof/Ceilings

System	Insulation R-value	Framing or Spline Spacing		R-value of Additional Layer of Continuous Insulation[2]							
				None	R-2	R-4	R-6	R-7	R-8	R-10	R-14
				A	B	C	D	E	F	G	H
Wood Framing	R-14[1]	48 in. o.c.	**1**	0.063	0.056	0.050	0.046	0.044	0.042	0.039	0.033
	R-22	48 in. o.c.	**2**	0.043	0.040	0.037	0.034	0.033	0.032	0.030	0.027
	R-28	48 in. o.c.	**3**	0.035	0.033	0.031	0.029	0.028	0.027	0.026	0.023
	R-36	48 in. o.c.	**4**	0.028	0.027	0.025	0.024	0.023	0.023	0.022	0.020
	R-22	96 in o.c.	**5**	0.042	0.039	0.036	0.034	0.032	0.031	0.030	0.026
	R-28	96 in o.c.	**6**	0.034	0.032	0.030	0.028	0.027	0.027	0.025	0.023
	R-36	96 in o.c.	**7**	0.027	0.026	0.024	0.023	0.023	0.022	0.021	0.020
Steel Framing	R-14[1]	48 in. o.c.	**8**	0.075	0.065	0.058	0.052	0.049	0.047	0.043	0.037
	R-22	48 in. o.c.	**9**	0.057	0.051	0.046	0.042	0.041	0.039	0.036	0.032
	R-28	48 in. o.c.	**10**	0.047	0.043	0.040	0.037	0.035	0.034	0.032	0.028
	R-36	48 in. o.c.	**11**	0.043	0.040	0.037	0.034	0.033	0.032	0.030	0.027
OSB Spline	R-22	48 in. o.c.	**12**	0.041	0.038	0.035	0.033	0.032	0.031	0.029	0.026
	R-28	48 in. o.c.	**13**	0.033	0.031	0.029	0.028	0.027	0.026	0.025	0.023
	R-36	48 in. o.c.	**14**	0.026	0.025	0.024	0.022	0.022	0.022	0.021	0.019
	R-22	96 in o.c.	**15**	0.041	0.038	0.035	0.033	0.032	0.031	0.029	0.026
	R-28	96 in o.c.	**16**	0.033	0.031	0.029	0.028	0.027	0.026	0.025	0.023
	R-36	96 in o.c.	**17**	0.026	0.025	0.024	0.022	0.022	0.022	0.021	0.019

Notes:

1. The insulation R-value must be at least R-14 in order to use this table.

2 For credit, continuous insulation shall be at least R-2 and may be installed on either the interior or the exterior of the wall assembly.

3. In climate zones 1 and 16 the insulating R-value of continuous insulation materials installed above the roofs waterproof membrane shall be multiplied by 0.8 before choosing the table column for determining assembly U-factor.

This table gives U-factors for structurally insulated panels used in ceiling and roof constructions. This is a construction system that consists of rigid foam insulation sandwiched between two layers of plywood or oriented strand board (OSB). Data is provided for three variations of this system. The system labeled “Wood Framing” uses wood spacers to separate the plywood or OSB boards and provide a means to connect the panels with mechanical fasteners. The system labeled “Steel Framing” uses steel framing members and mechanical fasteners at the joints. The system labeled “OSB Spline” uses splines to connect the panels so that framing members do not penetrate the insulation.

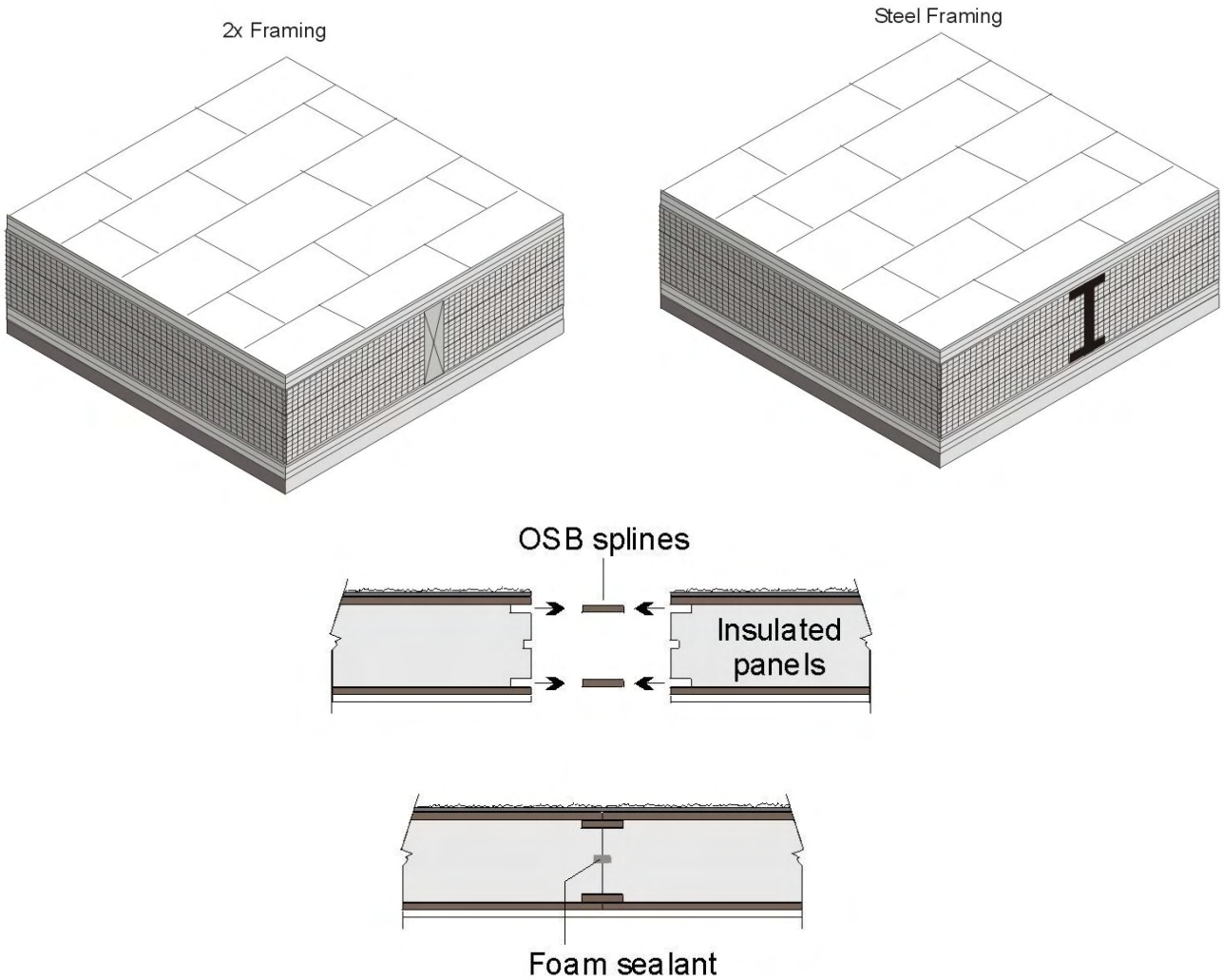

Figure 4.2.3 – SIPS Roof/Ceiling

Data from Column A will be used in most cases, since it is quite unusual to add continuous insulation to a panel that is basically all insulation anyway. If insulation is added, however, then the U-factor is selected from one of the other columns. If the tables are used manually, then the installed insulation shall have a thermal resistance at least as great as the column selected. When the table is used with CEC approved compliance software, then the R-value of any amount of continuous insulation may be accounted for along with the thermal resistance of special construction layers may be accounted for using Equation 4-1 and Equation 4-2.

Assumptions: The wood framing and OSB spline data are calculated using the parallel path method documented in the 2005 ASHRAE Handbook of Fundamentals. Assemblies with metal framing are calculated using the ASHRAE Zone Calculation Method which is also documented in the 2005 ASHRAE Handbook of Fundamentals. These calculations assume an exterior air film of R-0.17, asphalt shingles of R-0.44 (AR02), building paper of R-0.06 (BP01), 7/16 inch of OSB of R-0.69, the rigid insulation of R-3.85 per inch, another layer of 7/16 inch of OSB, ½ inch gypsum board of R-0.45 (GP01), an R-value of 0.99 per inch is assumed for the wood frame and an interior air film (heat flow up diagonally) of R-0.62. If an additional layer of insulation is used, this may be installed on either the interior or exterior of the SIPS panel assembly.

Table 4.2.4 – U-factors of Metal Framed Attic Roofs

Spacing	Nominal Framing Size	Cavity Insulation R-Value:		Rated R-value of Continuous Insulation[1]							
				R-0	R-2	R-4	R-6	R-7	R-8	R-10	R-14
				A	B	C	D	E	F	G	H
16 in. OC	Any	None	**1**	0.328	0.198	0.142	0.111	0.100	0.091	0.077	0.059
	2 x 4	R-11	**2**	0.126	0.101	0.084	0.072	0.067	0.063	0.056	0.046
	(3.65 in.)	R-13	**3**	0.121	0.097	0.082	0.070	0.066	0.061	0.055	0.045
		R-19	**4**	0.071	0.062	0.055	0.050	0.047	0.045	0.042	0.036
		R-21	**5**	0.063	0.056	0.050	0046	0.044	0.042	0.039	0.033
		R-22	**6**	0.059	0.053	0.048	0.044	0.042	0.040	0.037	0.032
		R-25	**7**	0.051	0.046	0.042	0.039	0.038	0.036	0.034	0.030
		R-30	**8**	0.041	0.038	0.035	0.033	0.032	0.031	0.029	0.026
		R-38	**9**	0.031	0.029	0.028	0.026	0.025	0.025	0.024	0.022
		R-44	**10**	0.027	0.026	0.024	0.023	0.023	0.022	0.021	0.020
		R-49	**11**	0.024	0.023	0.022	0.021	0.021	0.020	0.019	0.018
		R-60	**12**	0.019	0.018	0.018	0.017	0.017	0.016	0.016	0.015
24 in. OC	Any	None	**13**	0.324	0.197	0.141	0.110	0.099	0.090	0.076	0.059
	2 x 4	R-11	**14**	0.109	0.089	0.076	0.066	0.062	0.058	0.052	0.043
	(3.65 in.)	R-13	**15**	0.103	0.085	0.073	0.064	0.060	0.056	0.051	0.042
		R-19	**16**	0.065	0.058	0.052	0.047	0.045	0.043	0.039	0.034
		R-21	**17**	0.058	0.052	0.047	0.043	0.041	0.040	0.037	0.032
		R-22	**18**	0.055	0.050	0.045	0.041	0.040	0.038	0.035	0.031
		R-25	**19**	0.047	0.043	0.040	0.037	0.035	0.034	0.032	0.028
		R-30	**20**	0.039	0.036	0.034	0.032	0.031	0.030	0.028	0.025
		R-38	**21**	0.030	0.028	0.027	0.025	0.025	0.024	0.023	0.021
		R-44	**22**	0.026	0.025	0.024	0.022	0.022	0.022	0.021	0.019
		R-49	**23**	0.023	0.022	0.021	0.020	0.020	0.019	0.019	0.017
		R-60	**24**	0.019	0.018	0.018	0.017	0.017	0.016	0.016	0.015

Notes:

1 Continuous insulation shall be located at the ceiling or at the roof and be uninterrupted by framing.

2. In climate zones 1 and 16 the insulating R-value of continuous insulation materials installed above the roofs waterproof membrane shall be multiplied by 0.8 before choosing the table column for determining assembly U-factor.

This table contains U-factors for metal-framed attic roofs, where the ceiling is the air barrier and the attic is ventilated. This construction assembly is similar to those that are covered by Table 4.2.1, except that metal framing members are substituted for the wood-framing members. The top chord of the truss is typically sloped, while the bottom chord is typically flat. Data from this table may be used for cases where the bottom chord of the truss is sloped. If the bottom chord slopes more than 3:12, nonadhesive binder blown insulation must not be used.

For the majority of cases, values will be selected from column A of this table. Column A applies for the common situation where either batt or blown insulation is placed directly over the ceiling. Builders or designers may increase thermal performance by adding a continuous insulation layer at the ceiling. The continuous insulation is typically a rigid polystyrene or polyisocyurnate foam insulation. Continuous insulation does not include the blown or batt insulation that is over the bottom chord of the truss (this is already accounted for in the first column data).

When this table is used manually, the R-value of continuous insulation shall be equal to or greater than the R-value published in the continuous insulation columns. No interpolation is permitted when data from the table is used manually. CEC approved software, however, may determine the U-factor for any amount of continuous insulation and for unusual construction layers using Equation 4-1 and Equation 4-2.

.

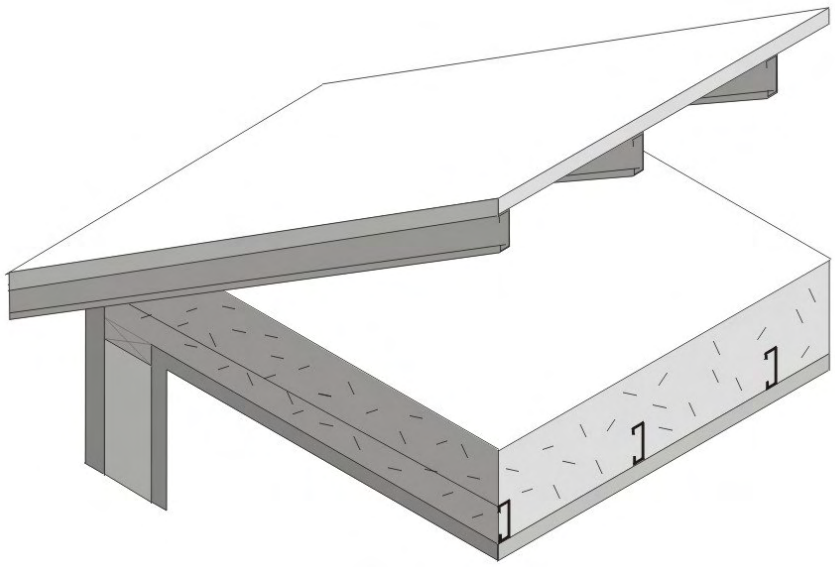

Figure 4.2.4 – Metal Framed Attic Roofs

Assumptions: These data are calculated using the zone method calculation documented in the 2005 ASHRAE Handbook of Fundamentals. These calculations assume an exterior air film of R-0.17, asphalt shingles of R-0.44 (AR02), building paper of R-0.06 (BP01), ½ inch of wood based sheathing (Custom), the attic air space (greater than 3.5 inch) of R-0.80, the insulation / framing layer, continuous insulation (if any) 1/2 inch gypsum of R-0.45 (GP01), and an interior air film (heat flow up) of R-0.61. The framing percentage is assumed to be 10 percent for 16 inch oncenter and 7 percent for 24 inch oncenter 7.25 percent of the attic insulation above the framing members is assumed to be at half depth, due to decreased depth of insulation at the eaves. Steel framing has 1.5 inch flange and is 0.0747 inch thick steel with no knockouts. U-factors calculated using EZ Frame 2.0B.

Table 4.2.5 – U-factors of Metal Framed Rafter Roofs

Spacing	R-Value of Insulation Between Framing	Nominal Framing Size		Rated R-value of Continuous Insulation[6]							
				R-0	R-2	R-4	R-6	R-7	R-8	R-10	R-14
				A	B	C	D	E	F	G	H
16 in. OC	None	Any	**1**	0.325	0.197	0.141	0.110	0.099	0.090	0.076	0.059
	R-11[2]	2x4	**2**	0.129	0.103	0.085	0.073	0.068	0.063	0.056	0.046
	R-13[2]	2x4	**3**	0.121	0.097	0.082	0.070	0.066	0.061	0.055	0.045
	R-15[2]	2x4	**4**	0.115	0.093	0.079	0.068	0.064	0.060	0.053	0.044
	R-19[2,3]	2x4	**5**	0.121	0.097	0.082	0.070	0.066	0.061	0.055	0.045
	R-11	2x6	**6**	0.123	0.099	0.082	0.071	0.066	0.062	0.055	0.045
	R-13	2x6	**7**	0.115	0.093	0.079	0.068	0.064	0.060	0.053	0.044
	R-15[2]	2x6	**8**	0.101	0.084	0.072	0.063	0.059	0.056	0.050	0.042
	R-19[2]	2x6	**9**	0.100	0.083	0.071	0.063	0.059	0.056	0.050	0.042
	R-19[2]	2x8	**10**	0.096	0.081	0.069	0.061	0.057	0.054	0.049	0.041
	R-21	2x8	**11**	0.093	0.078	0.068	0.060	0.056	0.053	0.048	0.040
	R-25	2x10	**12**	0.084	0.072	0.063	0.056	0.053	0.050	0.046	0.039
	R-30[4]	2x10	**13**	0.079	0.068	0.060	0.054	0.051	0.048	0.044	0.038
	R-30	2x12	**14**	0.076	0.066	0.058	0.052	0.050	0.047	0.043	0.037
	R-38 [4]	2x12	**15**	0.071	0.062	0.055	0.050	0.047	0.045	0.042	0.036
	R-38 [4]	2x14	**16**	0.068	0.060	0.053	0.048	0.046	0.044	0.040	0.035
	Sprayed Foam or Cellulose Insulation[2,5]	2x6	**17**	0.099	0.083	0.071	0.062	0.058	0.055	0.050	0.041
		2x8	**18**	0.087	0.074	0.065	0.057	0.054	0.051	0.047	0.039
		2x10	**19**	0.077	0.067	0.059	0.053	0.050	0.048	0.044	0.037
		2x12	**20**	0.069	0.061	0.054	0.049	0.047	0.044	0.041	0.035
		2x14	**21**	0.064	0.057	0.051	0.046	0.044	0.042	0.039	0.034
24 in. OC	None	Any	**22**	0.322	0.196	0.141	0.110	0.099	0.090	0.076	0.058
	R-11[2]	2x4	**23**	0.111	0.091	0.077	0.067	0.062	0.059	0.053	0.043
	R-13[2]	2x4	**24**	0.102	0.085	0.072	0.063	0.060	0.056	0.050	0.042
	R-15[2]	2x4	**25**	0.096	0.081	0.069	0.061	0.057	0.054	0.049	0.041
	R-19[2,3]	2x4	**26**	0.102	0.085	0.072	0.063	0.060	0.056	0.050	0.042
	R-11	2x6	**27**	0.107	0.088	0.075	0.065	0.061	0.058	0.052	0.043
	R-13	2x6	**28**	0.099	0.083	0.071	0.062	0.058	0.055	0.050	0.041
	R-15[2]	2x6	**29**	0.086	0.073	0.064	0.057	0.054	0.051	0.046	0.039
	R-19[2]	2x6	**30**	0.083	0.071	0.062	0.055	0.052	0.050	0.045	0.038
	R-19[2]	2x8	**31**	0.080	0.0690	0.061	0.054	0.051	0.049	0.044	0.038
	R-21	2x8	**32**	0.076	0.066	0.058	0.052	0.050	0.047	0.043	0.037
	R-25	2x10	**33**	0.068	0.060	0.053	0.048	0.046	0.044	0.040	0.035
	R-30[4]	2x10	**34**	0.063	0.056	0.050	0.046	0.044	0.042	0.039	0.033
	R-30	2x12	**35**	0.061	0.054	0.049	0.045	0.043	0.041	0.038	0.033
	R-38[4]	2x12	**36**	0.055	0.050	0.045	0.041	0.040	0.038	0.035	0.031
	R-38[4]	2x14	**37**	0.053	0.048	0.044	0.040	0.039	0.037	0.035	0.030
	Sprayed Foam or	2x6	**38**	0.081	0.070	0.061	0.055	0.052	0.049	0.045	0.038
		2x8	**39**	0.070	0.061	0.055	0.049	0.047	0.045	0.041	0.035

Cellulose Insulation[2,5]	2x10	**40**	0.061	0.054	0.049	0.045	0.043	0.041	0.038	0.033
	2x12	**41**	0.054	0.049	0.044	0.041	0.039	0.038	0.035	0.031
	2x14	**42**	0.049	0.045	0.041	0.038	0.036	0.035	0.033	0.029

Notes:

1. Rigid foam board used for cavity insulation must fill the entie cavity between the rafters and be sealed properly to prevent air gaps, and must be secured properly to prevent any future discrepancies in the construction assembly.

2. This assembly is only allowed where building officials approve rafter attic assemblies with no ventilation air spaces.

3. This assembly requires insulation with an R-value per inch 5.6 or larger (k-factor 1.8 or less). This is board type insulation, mostly Isocyanurate. Medium density spray polyurethane foam may also be used to meet this requirement if the quality installation procedures and documentation in Section 4.7 of Joint Appendix 4 are followed, Documentation from Directory of Certified insulation materials must be provided to show compliance with this assembly.

4. Higher density fiberglass batt is needed to achieve the indicated U-factor. R-30 must be achieved with less than 8.25 inch full thickness. R-38 must be achieved with less than 10.25 inch thickness (R-30c, R-38c).

5. Foamed plastic or cellulose insulation shall fill the entire cavity. Cellulose shall have a binder to prevent sagging. Verify that the building official in your area permits this construction, since there is no ventilation layer.

6. Continuous insulation shall be located at the ceiling or at the roof and be uninterrupted by framing . In climate zones 1 and 16 the insulating R-value of continuous insulation materials installed above the roofs waterproof membrane shall be multiplied by 0.8 before choosing the table column for determining assembly U-factor.

This table contains pre-calculated U-factors for metal-framed rafter roofs where the ceiling is the air barrier. This construction assembly is similar to that covered by Table 4.2.2 except that metal framing members are substituted for the wood-framing members. The rafters may be either flat or in a sloped application. Insulation is typically installed between the rafters. With this construction, the insulation is in contact with the ceiling and there is typically a one-inch air gap above the insulation so that moisture can be vented. Whether or not there is an air space above the insulation depends on local climate conditions and may not be required in some building permit jurisdictions. The building official will need to waive the air gap requirement to allow the use of cellulose insulation or sprayed foam.

U-factors are selected from Column A of this table when there is no continuous insulation. When continuous insulation is installed either at the ceiling or at the roof, then U-factors from other columns may be selected. The continuous insulation is typically a rigid polystyrene or polyisocyanurate foam insulation, but can also include mineral wool or other suitable materials.

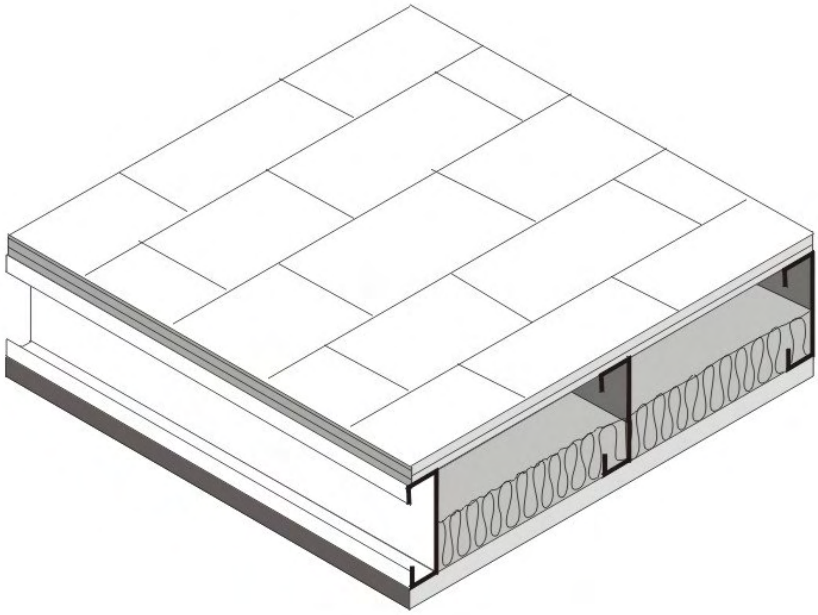

Figure 4.2.5 – Metal Framed Rafter Roof

When this table is used manually, the R-value of continuous insulation shall be equal to or greater than the R-value published in the continuous insulation columns. For instance if the insulation is R-3, the R-2 column shall be used. No interpolation is permitted when data from the table is used manually. CEC approved software, however, may determine the U-factor for any amount of continuous insulation and/or for unusual construction layers using Equation 4-1and Equation 4-2.

Assumptions: These data are calculated using the zone calculation method documented in the 2005 ASHRAE Handbook of Fundamentals. These calculations assume an exterior air film of R-0.17, asphalt shingles of R-0.44 (AR02), building paper of R-0.06 (BP01), ½ inch of wood based sheathing (Custom), the insulation / framing layer, ½ inch gypsum of R-0.45 (GP01), and an interior air film (heat flow up diagonally) of R-0.62 The continuous insulation may either be located at the ceiling or over the structural deck. The thickness of framing members is assumed to be 3.50, 5.50, 7.25, 9.25, and 11.25 in. for 2x4, 2x6, 2x8, 2x10, and 2x12 nominal sizes. High-density batt insulation is assumed to be 8.5 in. thick for R-30 and 10.5 in thick for R-38. Framing spacing is 10 percent for 16 inches on center and 7 percent for 24 inches on center. Steel framing has 1.5 inch flange and is 0.075 inch thick steel with no knockouts. U-factors calculated using EZ Frame 2.0B.

Table 4.2.6 –U-factors for Span Deck and Concrete Roofs

			R-value of Continuous Insulation									
			None	R-4	R-6	R-8	R-10	R-12	R-15	R-20	R-25	R-30
Fireproofing	**Concrete Topping Over Metal Deck**		**A**	**B**	**C**	**D**	**E**	**F**	**G**	**H**	**I**	**J**
Yes	None	**1**	0.348	0.145	0.113	0.092	0.078	0.067	0.056	0.044	0.036	0.030
	2 in.	**2**	0.324	0.141	0.110	0.090	0.076	0.066	0.055	0.043	0.036	0.030
	4 in.	**3**	0.302	0.137	0.107	0.088	0.075	0.065	0.055	0.043	0.035	0.030
	6 in.	**4**	0.283	0.133	0.105	0.087	0.074	0.064	0.054	0.042	0.035	0.030
No	None	**5**	0.503	0.167	0.125	0.100	0.083	0.071	0.059	0.045	0.037	0.031
	2 in.	**6**	0.452	0.161	0.122	0.098	0.082	0.070	0.058	0.045	0.037	0.031
	4 in.	**7**	0.412	0.156	0.119	0.096	0.080	0.069	0.057	0.045	0.036	0.031
	6 in.	**8**	0.377	0.150	0.116	0.094	0.079	0.068	0.057	0.044	0.036	0.031

1. In climate zones 1 and 16 the insulating R-value of continuous insulation materials installed above the roof waterproof membrane shall be multiplied by 0.8 before choosing the table column for determining assembly U-factor.

The constructions in this table are typical of Type I and Type II steel framed or concrete nonresidential buildings. The construction consists of a metal deck with or without a concrete topping. It may also be used for a metal deck or even wood deck ceiling as long as the insulation is continuous. Fireproofing may be sprayed onto the underside of the metal deck; it also covers steel structural members. Insulation is typically installed above the structural deck and below the waterproof membrane. This table may also be used for reinforced concrete roofs that do not have a metal deck. In this case, the fireproofing will typically not be installed and choices from the table should be made accordingly.

When this table is used manually, the R-value of continuous insulation shall be equal to or greater than the R-value published in the continuous insulation columns. No interpolation is permitted when data from the table is used manually. CEC approved compliance software, however, may determine the U-factor for any amount of continuous insulation and for unusual construction layers using Equation 4-1 and Equation 4-2. If the data is adjusted using Equation 4-2, the user shall take credit for a ceiling and the air space above the ceiling only if the ceiling serves as an air barrier. Suspended or T-bar ceilings do not serve as air barriers.

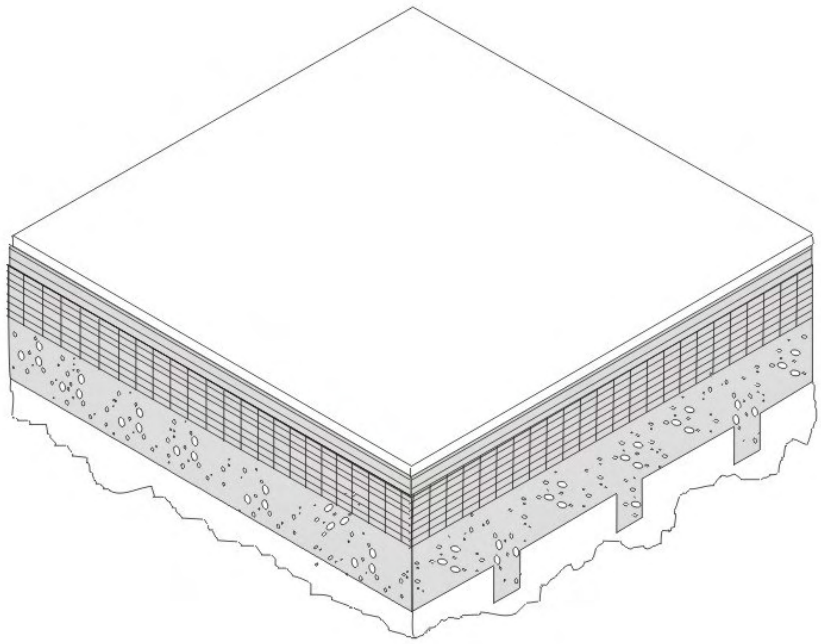

Figure 4.2.6 – Span Deck and Concrete Roof

Assumptions. These calculations are made using the parallel path method documented in the 2005 ASHRAE Handbook of Fundamentals. The assembly is assumed to consist of an exterior air film of R-0.17, a single ply roofing membrane (R-0.15), protective board (R-1.06), continuous insulation (if any), concrete topping with a density of 120 lb/ft and an R-value of 0.11 per inch (if any), metal span deck (negligible), and fireproofing (R-0.88). While a suspended ceiling typically exists below the structure, this is not considered part of the construction assembly therefore the same U-values are used for assemblies with or without suspended ceilings. The fireproofing is assumed to be equivalent to 60 lb/ft^3 concrete with a resistance of 0.44 per inch.

Table 4.2.7 – U-factors for Metal Building Roofs

Insulation System	R-Value of Insulation		Rated R-value of Continuous Insulation									
			R-0	R-4	R-6	R-8	R-10	R-12	R-15	R-20	R-25	R-30
			A	**B**	**C**	**D**	**E**	**F**	**G**	**H**	**I**	**J**
Screw Down Roofs (no Thermal Blocks)[2]	None	**1**	1.280	0.209	0.147	0.114	0.093	0.078	0.063	0.048	0.039	0.032
	R-10	**2**	0.153	0.095	0.080	0.069	0.060	0.054	0.046	0.038	0.032	0.027
	R-11	**3**	0.139	0.089	0.076	0.066	0.058	0.052	0.045	0.037	0.031	0.027
	R-13	**4**	0.130	0.086	0.073	0.064	0.057	0.051	0.044	0.036	0.031	0.027
	R-19	**5**	0.098	0.070	0.062	0.055	0.049	0.045	0.040	0.033	0.028	0.025
Standing Seam Roof with Single Layer of Insulation Draped over Purlins and Compressed. Thermal blocks at supports.[2]	R-10	**6**	0.097	0.070	0.061	0.055	0.049	0.045	0.040	0.033	0.028	0.025
	R-11	**7**	0.092	0.067	0.059	0.053	0.048	0.044	0.039	0.032	0.028	0.024
	R-13	**8**	0.083	0.062	0.055	0.050	0.045	0.042	0.037	0.031	0.027	0.024
	R-19	**9**	0.065	0.052	0.047	0.043	0.039	0.037	0.033	0.028	0.025	0.022
Standing Seam Roof with Double Layer of Insulation.[3]Thermal blocks at supports.[2]	R-10 + R-10	**10**	0.063	0.050	0.046	0.042	0.039	0.036	0.032	0.028	0.024	0.022
	R-10 + R-11	**11**	0.061	0.049	0.045	0.041	0.038	0.035	0.032	0.027	0.024	0.022
	R-11 + R-11	**12**	0.060	0.048	0.044	0.041	0.038	0.035	0.032	0.027	0.024	0.021
	R-10 + R-13	**13**	0.058	0.047	0.043	0.040	0.037	0.034	0.031	0.027	0.024	0.021
	R-11 + R-13	**14**	0.057	0.046	0.042	0.039	0.036	0.034	0.031	0.027	0.024	0.021
	R-13 + R-13	**15**	0.055	0.045	0.041	0.038	0.035	0.033	0.030	0.026	0.023	0.021
	R-10 + R-19	**16**	0.052	0.043	0.040	0.037	0.034	0.032	0.029	0.025	0.023	0.020
	R-11 + R-19	**17**	0.051	0.042	0.039	0.036	0.034	0.032	0.029	0.025	0.022	0.020
	R-13 + R-19	**17**	0.049	0.041	0.038	0.035	0.033	0.031	0.028	0.025	0.022	0.020
	R-19 + R-19	**18**	0.046	0.039	0.036	0.034	0.032	0.030	0.027	0.024	0.021	0.019
Filled Cavity with Thermal Blocks [2, 4]	R19 + R-10	**19**	0.041	0.035	0.033	0.031	0.029	0.027	0.025	0.023	0.020	0.018

Notes:

1. A roof must have metal purlins no closer than 4 ft on center to use this table. If the roof deck is attached to the purlins more frequently than 12 in oc, 0.008 must be added to the U-factors in this table.
2. Thermal blocks are an R-5 of rigid insulation, which extends 1" beyond the width of the purlin on each side.
3. Multiple R-values are listed in order from outside to inside. First layer is parallel to the purlins, and supported by a system; second layer is laid on top of the purlins.
4. In climate zones 1 and 16 the insulating R-value of continuous insulation materials installed above the roof waterproof membrane shall be multiplied times 0.8 before choosing the table column for determining assembly U-factor.

The U-factors in this table are intended for use with metal building roofs. This type of construction is typical for manufacturing and warehouse facilities, but is used for other building types as well. The typical method of insulating this type of building is to drape vinyl backed fiberglass insulation over the metal purlins before the metal deck is attached with metal screws. With this method, the insulation is compressed at the supports, reducing its effectiveness. The first part of the table contains values for this insulation technique. The second section of the table has data for the case when a thermal block is used at the support. The insulation is still compressed, but the thermal block, which generally consists of an 8 in. wide strip of foam insulation, improves the thermal performance. The third section of the table deals with systems that involve two layers of insulation.

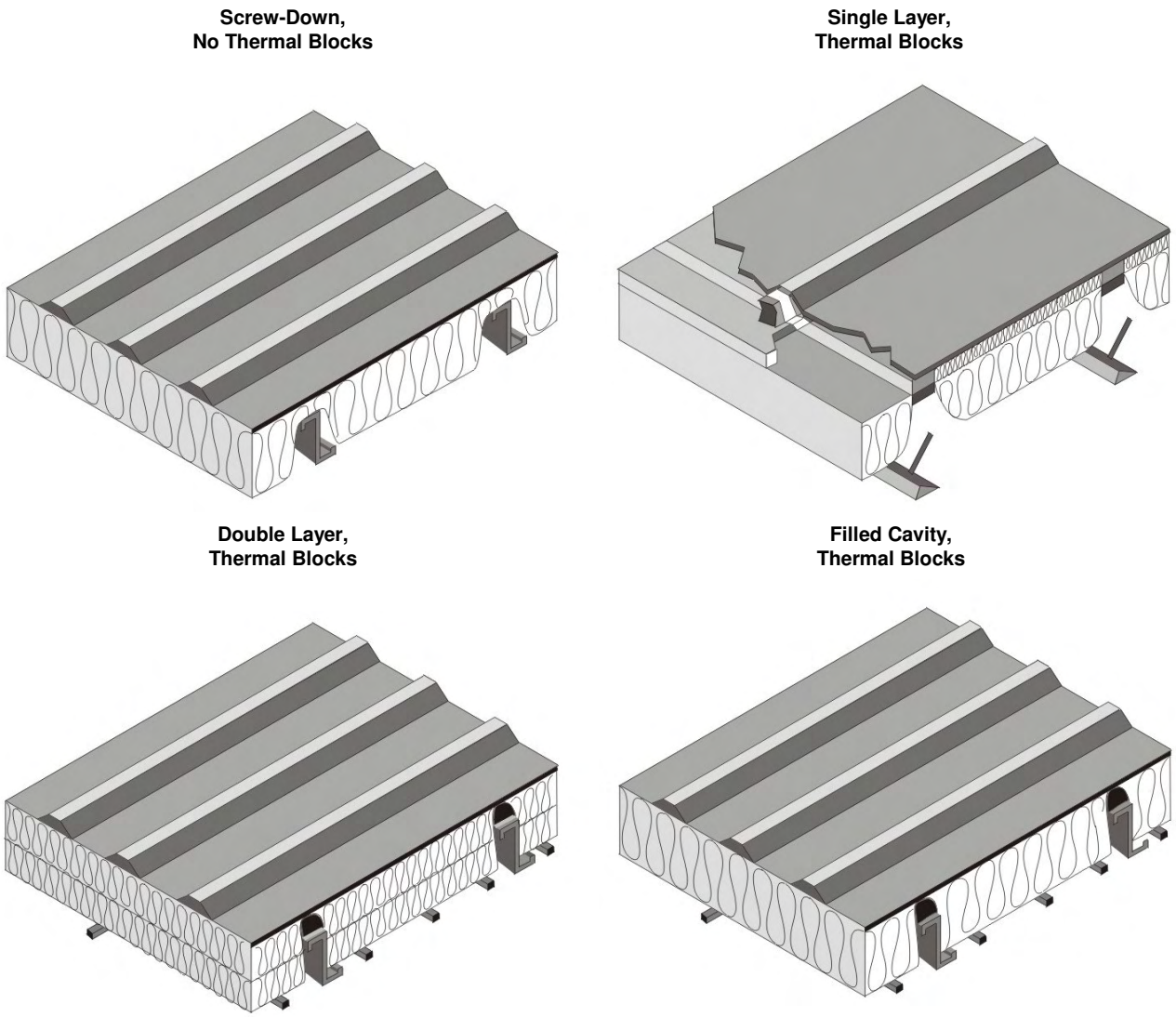

Figure 4.2.7 – Metal Building Roofs

For the majority of cases, values will be selected from column A of this table. Builders or designers may increase thermal performance by adding a continuous insulation layer between the metal decking and the structural supports. The continuous insulation is typically a rigid polystyrene or polyisocyanurate foam insulation.

When this table is used manually, the R-value of continuous insulation shall be equal to or greater than the R-value published in the continuous insulation columns. No interpolation is permitted when data from the table is used manually. CEC approved compliance software, however, may determine the U-factor for any amount of continuous insulation using Equation 4-1.

Assumptions: Data in Column A of this table is taken from the ASHRAE/IESNA Standard 90.1-2004, Appendix A. The data is also published in the NAIMA *Compliance for Metal Buildings*, 1997.

Table 4.2.8 – U-factors for Insulated Ceiling with Removable Panels

R-value of Insulation Over Suspended Ceiling		U-factor A
None	**1**	0.304
7	**2**	0.152
11	**3**	0.132
13	**4**	0.126
19	**5**	0.113
21	**6**	0.110
22	**7**	0.109
30	**8**	0.102
38	**9**	0.098
49	**10**	0.094
60	**11**	0.092

This table includes U-factors for the case of insulation placed over suspended ceilings. This situation is only permitted for a combined floor area no greater than 2,000 square feet in an otherwise unconditioned building, and when the average height of the space between the ceiling and the roof over these spaces is greater than 12 feet. The suspended ceiling does not provide an effective air barrier and leakage is accounted for in the calculations.

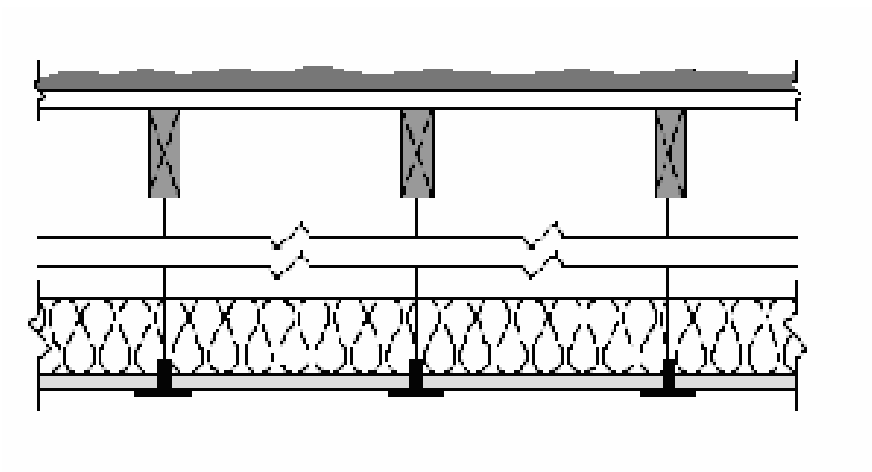

Figure 4.2.8 – Insulated Ceiling with Removable Panels

Assumptions. These calculations assume an exterior air film of R-0.17, a built-up roof of R-0.33 (BR01), ¾ inch wood based sheathing (Custom), a twelve foot air space of R-0.80, the insulation (for the insulated portion), removable ceiling panels with a R-0.50 and an interior air film (heat flow up) of R-0.61. 75% of the ceiling is assumed covered by insulation and the remainder is not insulated. The uninsulated portion includes lighting fixtures and areas where the insulation is not continuous. A correction factor of 0.005 is added to the resulting U-factor to account for infiltration through the suspended ceiling and lighting fixtures.

Table 4.2.9 – U-factors of Insulated Metal Panel Roofs and Ceilings

		U-factor (Btu/^{0}F-ft^2)
Panel Thickness		**A**
2”	**1**	0.079
2 ½”	**2**	0.064
3”	**3**	0.054
4”	**4**	0.041
5”	**5**	0.033
6”	**6**	0.028

This table contains thermal performance data (U-factors) for foamed-in-place, insulated metal panels consisting of liquid polyurethane or polyisocyanurate injected between metal skins in individual molds or on fully automated production lines. Metal building construction is the most common application for this product where the metal panel is fastened to the frame of the structure. This table can only be used for insulated panels that are factory built. This table does not apply to panels that utilize polystyrene, or to field applied products such as spray applied insulations.

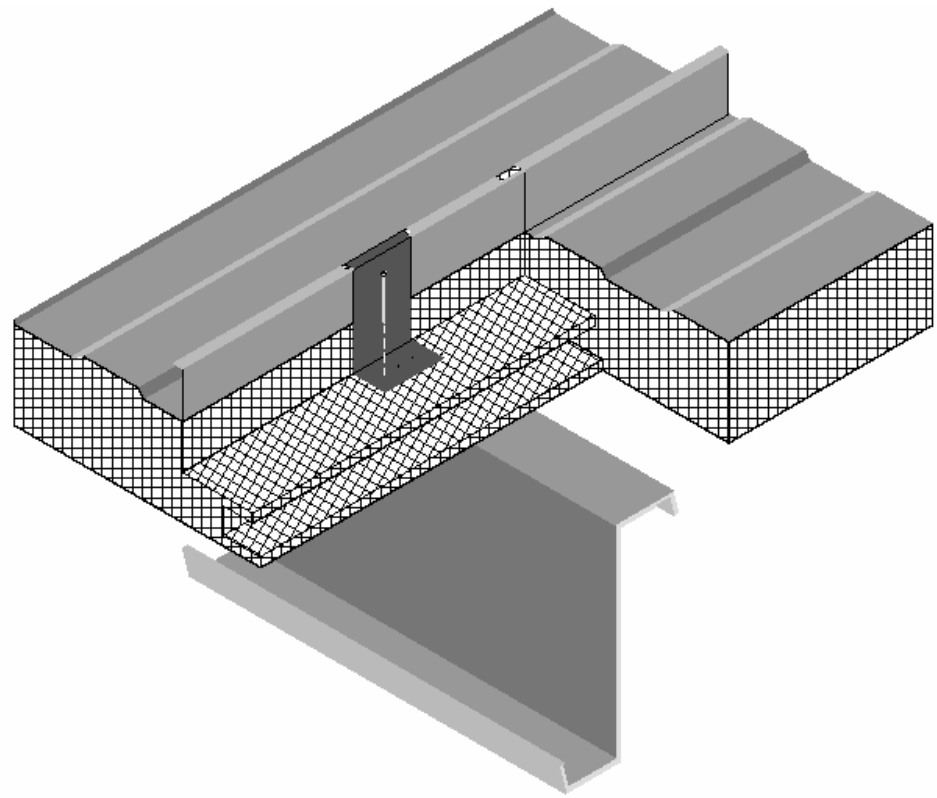

Figure 4.2.9 –Insulated Metal Panel Roofs

Assumptions. These data are calculated using the parallel path method documented in the 2005 ASHRAE Handbook of Fundamentals. These calculations assume an exterior air film of R-0.17, light gauge metal exterior of R-0.0747, continuous insulation R-5.9 per inch, light gauge metal interior of 0.0747 inch thickness and an interior air film (heat flow up) of R-0.61. The panels are assumed to be continuous with no framing penetration. The R-value of the light gauge metal is negligible.

4.3 Walls

Table 4.3.1 – U-factors of Wood Framed Walls

Spacing	Cavity Insulation	Nominal Framing Size		Rated R-value of Continuous Insulation [2]							
				R-0	R-2	R-4	R-6	R-7	R-8	R-10	R-14
				A	B	C	D	E	F	G	H
16 in. OC	None	Any	1	0.356	0.208	0.147	0.114	0.102	0.093	0.078	0.059
	R-11 batt	2x4	2	0.110	0.090	0.076	0.066	0.062	0.059	0.052	0.043
	R-13 batt	2x4	3	0.102	0.085	0.072	0.063	0.060	0.056	0.050	0.042
	R-15 batt [1]	2x4	4	0.095	0.080	0.069	0.061	0.057	0.054	0.049	0.041
	R-19 batt	2x6	5	0.074	0.064	0.057	0.051	0.049	0.046	0.043	0.036
	R-21 batt [1]	2x6	6	0.069	0.061	0.054	0.049	0.047	0.044	0.041	0.035
	R-19 batt	2x8	7	0.065	0.058	0.052	0.047	0.045	0.043	0.039	0.034
	R-22 batt	2x8	8	0.061	0.054	0.049	0.045	0.043	0.041	0.038	0.033
	R-25 batt	2x8	9	0.057	0.051	0.046	0.042	0.041	0.039	0.036	0.032
	R-30 batt 1	2x8	10	0.055	0.050	0.045	0.041	0.040	0.038	0.035	0.031
	R-30 batt	2x10	11	0.047	0.043	0.040	0.037	0.035	0.034	0.032	0.028
	R-38 batt	2x10	12	0.046	0.042	0.039	0.036	0.035	0.034	0.032	0.028
	R-38 batt	2x12	13	0.039	0.036	0.034	0.032	0.031	0.030	0.028	0.025
	Foamed Plastic or Cellulose Insulation3	2x4	14	0.103	0.085	0.073	0.064	0.060	0.056	0.051	0.042
		2x6	15	0.071	0.062	0.055	0.050	0.047	0.045	0.042	0.036
		2x8	16	0.056	0.050	0.046	0.042	0.040	0.039	0.036	0.031
		2x10	17	0.045	0.041	0.038	0.035	0.034	0.033	0.031	0.028
		2x12	18	0.038	0.035	0.033	0.031	0.030	0.029	0.028	0.025
24 in. OC	None	Any	19	0.362	0.210	0.148	0.114	0.102	0.093	0.078	0.060
	R-11 batt	2x4	20	0.106	0.087	0.074	0.065	0.061	0.057	0.051	0.043
	R-13 batt	2x4	21	0.098	0.082	0.070	0.062	0.058	0.055	0.049	0.041
	R-15 batt	2x4	22	0.091	0.077	0.067	0.059	0.056	0.053	0.048	0.040
	R-19 batt	2x6	23	0.071	0.062	0.055	0.050	0.047	0.045	0.042	0.036
	R-21 batt [1]	2x6	24	0.066	0.058	0.052	0.047	0.045	0.043	0.040	0.034
	R-19 batt	2x8	25	0.063	0.056	0.050	0.046	0.044	0.042	0.039	0.033
	R-22 batt	2x8	26	0.058	0.052	0.047	0.043	0.041	0.040	0.037	0.032
	R-25 batt	2x8	27	0.056	0.050	0.046	0.042	0.040	0.039	0.036	0.031
	R-30 batt 1	2x8	28	0.053	0.048	0.044	0.040	0.039	0.037	0.035	0.030
	R-30 batt	2x10	29	0.045	0.041	0.038	0.035	0.034	0.033	0.031	0.028
	R-38 batt	2x10	30	0.044	0.040	0.037	0.035	0.034	0.033	0.031	0.027
	R-38 batt	2x12	31	0.038	0.035	0.033	0.031	0.030	0.029	0.028	0.025
	Foamed Plastic or Cellulose Insulation3	2x4	32	0.099	0.083	0.071	0.062	0.058	0.055	0.050	0.041
		2x6	33	0.069	0.059	0.054	0.049	0.047	0.044	0.041	0.035
		2x8	34	0.054	0.049	0.044	0.041	0.039	0.038	0.035	0.031
		2x10	35	0.044	0.040	0.037	0.035	0.034	0.033	0.031	0.027
		2x12	36	0.036	0.034	0.031	0.030	0.029	0.028	0.026	0.024

Notes

1. Higher density fiberglass batt is required in these cases.
2. Continuous insulation may be installed on either the inside or the exterior of the wall, or both.
3. Foamed plastic and cellulose shall fill the entire cavity. Cellulose shall have a binder to prevent sagging.

This table contains U-factors for wood framed walls, which are typical of low-rise residential buildings and Type V nonresidential buildings. If continuous insulation is not used, then choices are made from Column A. In this case, the insulation is installed between the framing members. When continuous insulation is also used, this is typically installed on the exterior side of the wall, but can also be used on the inside. The continuous insulation is typically a rigid polystyrene or polyisocyanurate foam insulation.

When this table is used manually, the R-value of continuous insulation shall be equal to or greater than the R-value published in the continuous insulation columns. Continuous insulation of at least R-2 must exist in order to use this table. No interpolation is permitted when data from the table is used manually. CEC approved compliance software, however, may determine the U-factor for any amount of continuous insulation or for unusual construction assemblies using Equation 4-1 and Equation 4-2.

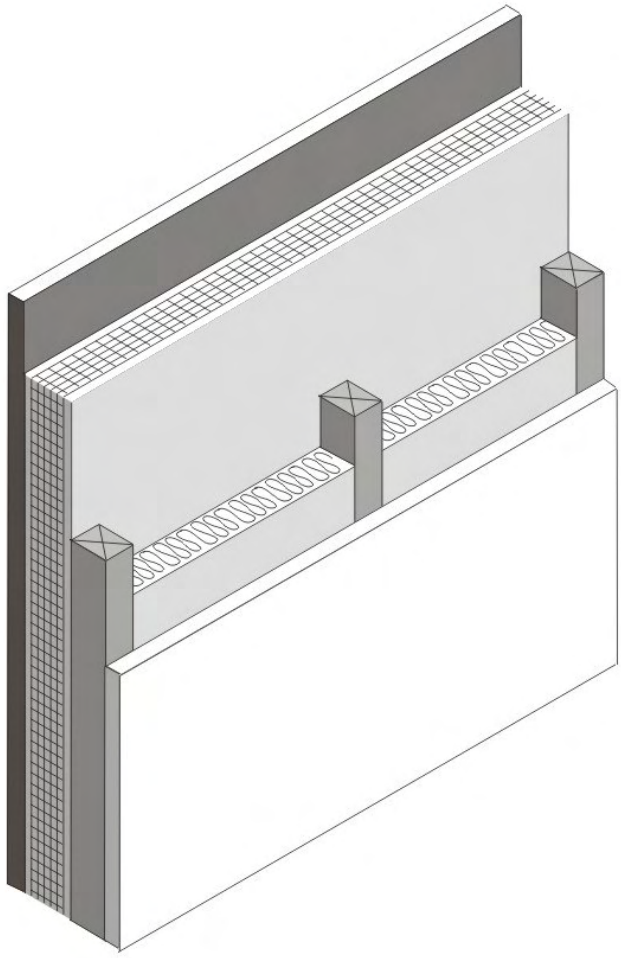

Figure 4.3.1 – Wood Framed Wall

Assumptions. Values in this table were calculated using the parallel heat flow calculation method, documented in the 2005 ASHRAE Handbook of Fundamentals. The construction assembly assumes an exterior air film of R-0.17, a 7/8 inch layer of stucco of R-0.18 (SC01), building paper of R-0.06 (BP01), continuous insulation (if any), the cavity insulation / framing layer, ½ inch gypsum board of R-0.45 (GP01), and an interior air film 0.68. The framing factor is assumed to be 25 percent for 16 inch stud spacing and 22 percent for 24 inch spacing. Foam plastic and cellulose are assumed to entirely fill the cavity and have a thermal resistance of R-3.6 per inch. Actual cavity depth is 3.5 inch for 2x4, 5.5 inch for 2x6, 7.25 inch for 2x8, 9.25 inch for 2x10, and 11.25 inch for 2x12. High density R-30 insulation is assumed to be 8.5 inch thick batt and R-38 is assumed to be 10.5 inch thick.

Table 4.3.2 – U-factors of Structurally Insulated Wall Panels (SIPS)

Type	Insulation R-value	Framing or Spline Spacing		Rated R-value of Continuous Insulation [2]							
				None	R-2	R-4	R-6	R-7	R-8	R-10	R-14
				A	B	C	D	E	F	G	H
Wood Spacers	R-14[1]	48 in. o.c.	**1**	0.077	0.067	0.059	0.053	0.050	0.048	0.043	0.037
	R-22	48 in. o.c.	**2**	0.053	0.048	0.044	0.040	0.039	0.037	0.035	0.031
	R-26 [3]	48 in o.c.	**3**	0.054	0.049	0.045	0.041	0.039	0.038	0.035	0.031
	R-28	48 in o.c.	**4**	0.042	0.039	0.036	0.034	0.033	0.032	0.030	0.027
	R-36	48 in o.c.	**5**	0.034	0.032	0.030	0.028	0.028	0.027	0.025	0.023
	R-40 [3]	48 in o.c.	**6**	0.038	0.035	0.033	0.031	0.030	0.029	0.027	0.025
	R-44	48 in o.c.	**7**	0.029	0.027	0.026	0.024	0.024	0.023	0.022	0.020
OSB Spline	R-14[1]	48 in. o.c.	**8**	0.061	0.055	0.049	0.045	0.043	0.041	0.038	0.033
	R-22	48 in. o.c.	**9**	0.041	0.038	0.036	0.033	0.032	0.031	0.029	0.026
	R-26	48 in o.c.	**10**	NA	NA	NA	NA	NA	NA	NA	NA
	R-28	48 in o.c.	**11**	0.032	0.030	0.029	0.027	0.026	0.026	0.024	0.022
	R-36	48 in o.c.	**12**	0.026	0.024	0.023	0.022	0.022	0.021	0.020	0.019
	R-40	48 in o.c.	**13**	NA	NA	NA	NA	NA	NA	NA	NA
	R-44	48 in o.c.	**14**	0.022	0.021	0.020	0.019	0.019	0.018	0.018	0.017

Notes:

1. The insulation R-value must be at least R-14 in order to use this table.

2 For credit, continuous insulation shall be at least R-2 and may be installed on either the inside or the exterior of the wall.

3. Entries for R-26 and R-40 correspond to SIP panels with a rigid polyisocyanurate insulation core which has a higher R–value per inch than the other assemblies but it is used in a thinner panels.

This table gives U-factors for structurally insulated panels used in wall construction. This is a construction system that consists of rigid foam insulation sandwiched between two layers of plywood or oriented strand board (OSB). Data is provided for two variations of this system. The system labeled “Wood Spacers” uses wood spacers to separate the plywood or OSB boards and provide a means to connect the panels with mechanical fasteners. The system labeled “OSB Spline” uses splines to connect the panels so that framing members does not penetrate the insulation.

If continuous insulation is not used, then choices are made from Column A. When continuous insulation is also used, this is typically installed on the exterior side of the wall, but can also be used on the inside. The continuous insulation is typically a rigid polystyrene or polyisocyanurate foam insulation. Adding continuous insulation to a SIPS panel is highly unusual since the panel itself is mostly continuous insulation.

When this table is used manually, the R-value of continuous insulation shall be equal to or greater than the R-value published in the continuous insulation columns. Continuous insulation of at least R-2 must exist in order to use this table. No interpolation is permitted when data from the table is used manually. CEC approved software, however, may determine the U-factor for any amount of continuous insulation or for unusual construction assemblies using Equation 4-1 and Equation 4-2.

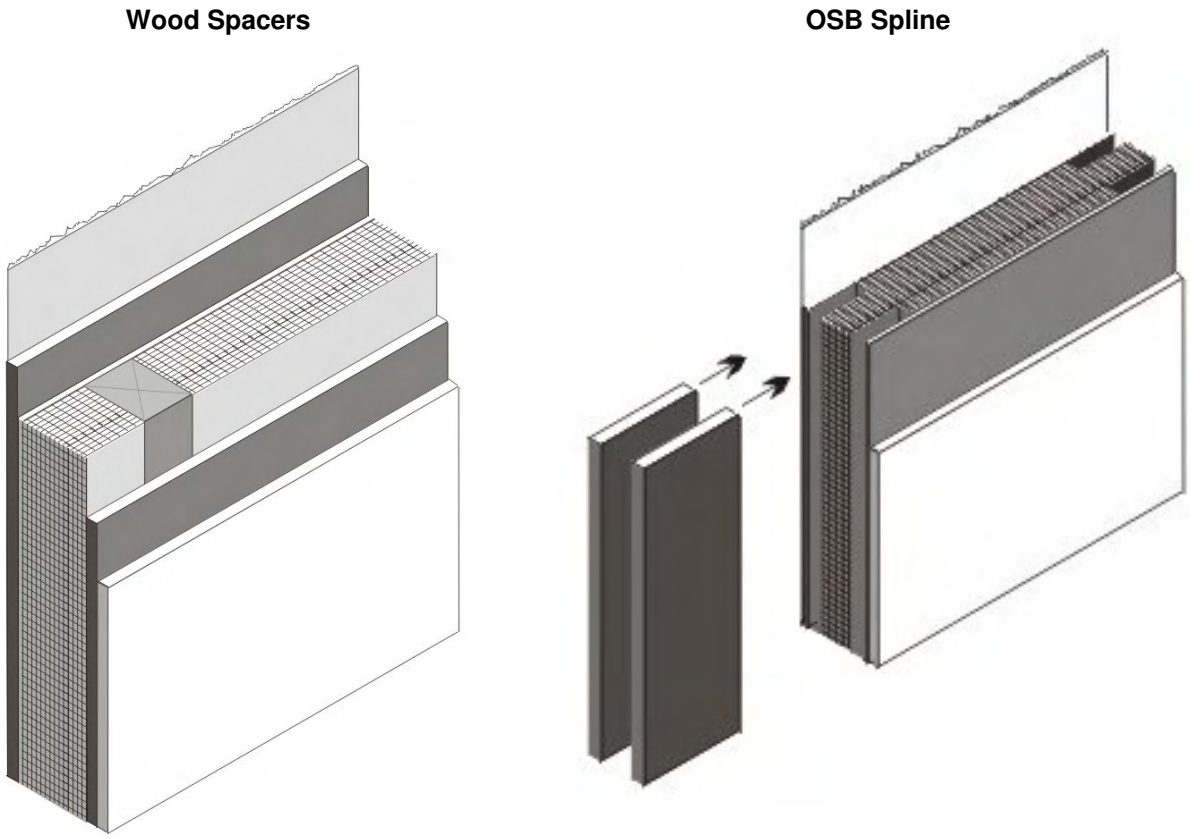

Figure 4.3.2 – Structurally Insulated Wall Panels (SIPS)
This figure shows just one way that panels are connected. Other options exist.

Assumptions: These data are calculated using the parallel path method documented in the 2005 ASHRAE Handbook of Fundamentals. These calculations assume an exterior air film of R-0.17, a 7/8 inch layer of stucco of R-0.18, building paper of R-0.06 (BP01), 7/16 inch of OSB of R-0.44, insulation at R-3.85 per inch (as specified), 7/16 inch of OSB of R-0.44, 1/2 inch gypsum board of R-0.45 (GP01), and an interior air film of R-0.68. The R-26 and R-40 wood spacer walls are calculated using polyisocyanurate insulation at R-7 per inch. A framing factor of 13 percent is assumed for wood spacers and 7 percent for the OSB spline system. Framing includes the sill plate, the header and framing around windows and doors

Table 4.3.3 – U-factors of Metal Framed Walls for Nonresidential Construction

Spacing	Cavity Insulation R-Value:	Nominal Framing Size		Rated R-value of Continuous Insulation [2]							
				R-0	R-2	R-4	R-6	R-7	R-8	R-10	R-14
				A	B	C	D	E	F	G	H
16 in. OC	None	Any	**1**	0.458	0.239	0.162	0.122	0.109	0.098	0.082	0.062
	R-11	2x4	**2**	0.244	0.155	0.118	0.096	0.087	0.080	0.069	0.054
	R-13	2x4	**3**	0.217	0.151	0.116	0.094	0.086	0.079	0.068	0.054
	R-15	2x4	**4**	0.211	0.148	0.114	0.093	0.085	0.078	0.068	0.053
	R-19	2x6	**5**	0.183	0.134	0.106	0.087	0.080	0.074	0.065	0.051
	R-21[1]	2x6	**6**	0.178	0.131	0.104	0.086	0.079	0.073	0.064	0.051
	R-19	2x8	**7**	0.164	0.123	0.099	0.083	0.076	0.071	0.062	0.050
	R-22	2x8	**8**	0.160	0.121	0.098	0.082	0.075	0.070	0.062	0.049
	R-25	2x8	**9**	0.158	0.120	0.097	0.081	0.075	0.070	0.061	0.049
	R-30[1]	2x8	**10**	0.157	0.119	0.096	0.081	0.075	0.070	0.061	0.049
	R-30	2x10	**11**	0.140	0.109	0.090	0.076	0.071	0.066	0.058	0.047
	R-38[1]	2x10	**12**	0.139	0.109	0.089	0.076	0.070	0.066	0.058	0.047
	R-38	2 x 12	**13**	0.124	0.099	0.083	0.071	0.066	0.062	0.055	0.045
	Foamed Plastic or Cellulose Insulation[3]	2 x 4	**14**	0.218	0.152	0.116	0.094	0.086	0.079	0.069	0.054
		2 x 6	**15**	0.179	0.132	0.104	0.086	0.079	0.074	0.064	0.051
		2 x 8	**16**	0.157	0.119	0.096	0.081	0.075	0.070	0.061	0.049
		2 x 10	**17**	0.138	0.108	0.089	0.075	0.070	0.066	0.058	0.047
		2 x 12	**18**	0.123	0.099	0.082	0.071	0.066	0.062	0.055	0.045
24 in. OC	None	Any	**24**	0.455	0.238	0.161	0.122	0.109	0.098	0.082	0.062
	R-11	2x4	**25**	0.210	0.148	0.114	0.093	0.085	0.078	0.068	0.053
	R-13	2x4	**26**	0.203	0.144	0.112	0.092	0.084	0.077	0.067	0.053
	R-15	2x4	**27**	0.197	0.141	0.110	0.090	0.083	0.076	0.066	0.052
	R-19	2x6	**28**	0.164	0.123	0.099	0.083	0.076	0.071	0.062	0.050
	R-21[1]	2x6	**29**	0.161	0.122	0.098	0.082	0.076	0.070	0.062	0.049
	R-19	2x8	**30**	0.153	0.117	0.095	0.080	0.074	0.069	0.060	0.049
	R-22	2x8	**21**	0.149	0.115	0.093	0.079	0.073	0.068	0.060	0.048
	R-25	2x8	**32**	0.147	0.114	0.093	0.078	0.072	0.068	0.060	0.048
	R-30[1]	2x8	**33**	0.146	0.113	0.092	0.078	0.072	0.067	0.059	0.048
	R-30	2x10	**34**	0.130	0.103	0.086	0.073	0.068	0.064	0.057	0.046
	R-38[1]	2x10	**35**	0.128	0.102	0.085	0.072	0.068	0.063	0.056	0.046
	R-38	2 x 12	**36**	0.115	0.093	0.079	0.068	0.064	0.060	0.053	0.044
	Foamed Plastic or Cellulose Insulation[3]	2 x 4	**37**	0.204	0.145	0.112	0.092	0.084	0.078	0.067	0.053
		2 x 6	**38**	0.167	0.125	0.100	0.083	0.077	0.071	0.063	0.050
		2 x 8	**39**	0.146	0.113	0.092	0.078	0.072	0.067	0.059	0.048
		2 x 10	**40**	0.128	0.102	0.085	0.072	0.068	0.063	0.056	0.046
		2 x 12	**41**	0.114	0.093	0.078	0.068	0.063	0.060	0.053	0.044

Notes

1. Higher density fiberglass batt is required in these cases.
2. Continuous insulation may be installed on either the inside or the exterior of the wall, or both.
3. Foamed plastic and cellulose shall fill the entire cavity. Cellulose shall have a binder to prevent sagging.

This table contains U-factors for steel or metal-framed walls, which are typical of nonresidential buildings. The table may be used for any construction assembly where the primary insulation is installed in a metal-framed wall, e.g. uninsulated curtain walls with metal furring on the inside.

If continuous insulation is not used, then choices are made from Column A. In this case, the insulation is installed only between the framing members. When continuous insulation is also used, it is typically installed on the exterior side of the wall, but can also be used on the inside. The continuous insulation is typically a rigid polystyrene or polyisocyanurate foam insulation.

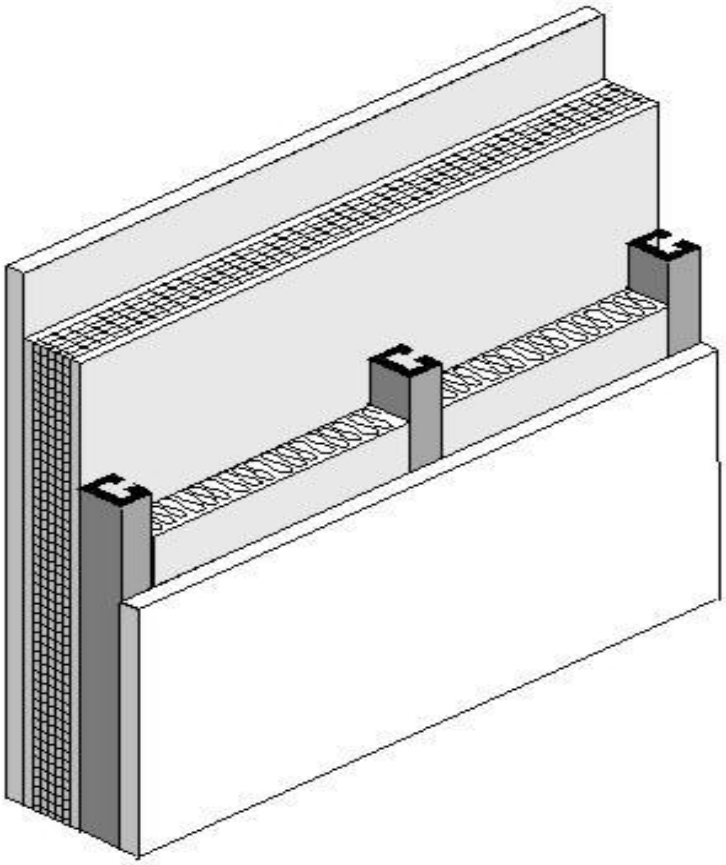

Figure 4.3.3 – Metal Framed Wall

When this table is used manually, the R-value of continuous insulation shall be equal to or greater than the R-value published in the continuous insulation columns. Continuous insulation of at least R-2 must exist in order to use values for continuous insulation. No interpolation is permitted when data from the table is used manually. CEC approved ACMs, however, may determine the U-factor for any amount of continuous insulation or for unusual construction assemblies using Equation 4-1 and Equation 4-2.

Assumptions: Values in this table were calculated using the zone calculation method. The construction assembly assumes an exterior air film of R-0.17, a 7/8 inch layer of stucco of R-0.18, building paper of R-0.06 (BP01), continuous insulation (if any), the insulation / framing layer, 1/2 inch gypsum of R-0.45 gypsum board (GP01), and an interior air film 0.68. The steel framing is assumed to be 0.0747 inch thick with a 15 percent knock out. The framing factor is assumed to be 25 percent for 16 inch stud spacing and 22 percent for 24 inch spacing. The EZFrame internal default framing percentages are 15 percent for 16 inch stud spacing and 12 percent for 24 inch spacing. To account for the increased wall framing percentage the frame spacing input to the EZ Frame program is reduced to 13.218 inches for 16 inch stud spacing and 15.231 inches for 24 inch stud spacing. Foam plastic and cellulose are assumed to entirely fill the cavity and have a thermal resistance of R-3.6 per inch. Actual cavity depth is 3.5 inch for 2x4, 5.5 inch for 2x6, 7.25 inch for 2x8, 9.25 inch for 2x10,

and 11.25 inch for 2x12. High density R-30 insulation is assumed to be 8.5 inch thick batt and R-38 is assumed to be 10.5 inch thick.

Table 4.3.4 – U-factors of Metal Framed Walls for Residential Construction

Spacing	Cavity Insulation R-Value:	Nominal Framing Size		R-0 A	R-2 B	R-4 C	R-5 D	R-6 E	R-7 F
16 in. OC	None	Any	1	0.455	0.238	0.161	0.139	0.122	0.109
	R-11	2x4	2	0.200	0.137	0.107	0.097	0.088	0.081
	R-13	2x4	3	0.192	0.132	0.105	0.095	0.087	0.080
	R-15	2x4	4	0.186	0.129	0.102	0.093	0.085	0.078
	R-19	2x6	5	0.154	0.112	0.092	0.084	0.077	0.072
	R-21[1]	2x6	6	0.151	0.110	0.090	0.083	0.076	0.071
	R-19	2x8	7	0.134	0.102	0.085	0.078	0.072	0.067
	R-22	2x8	8	0.129	0.099	0.082	0.076	0.071	0.066
	R-25	2x8	9	0.125	0.096	0.081	0.075	0.069	0.065
	R-30[1]	2x8	10	0.120	0.093	0.078	0.073	0.068	0.063
	R-30	2x10	11	0.109	0.086	0.073	0.068	0.064	0.060
	R-38[1]	2x10	12	0.104	0.082	0.071	0.066	0.062	0.058
	R-38	2 x 12	13	0.095	0.077	0.067	0.062	0.059	0.055
	Foamed Plastic or Cellulose Insulation[3]	2 x 4	14	0.177	0.131	0.104	0.094	0.086	0.079
		2 x 6	15	0.152	0.119	0.095	0.087	0.080	0.074
		2 x 8	16	0.121	0.098	0.082	0.076	0.070	0.066
		2 x 10	17	0.105	0.0.87	0.074	0.069	0.064	0.060
		2 x 12	18	0.092	0.077	0.067	0.063	0.059	0.056
24 in. OC	None	Any	24	0.449	0.236	0.161	0.138	0.121	0.108
	R-11	2x4	25	0.189	0.131	0.104	0.094	0.086	0.079
	R-13	2x4	26	0.181	0.127	0.101	0.092	0.084	0.078
	R-15	2x4	27	0.175	0.123	0.099	0.090	0.082	0.076
	R-19	2x6	28	0.144	0.107	0.088	0.081	0.075	0.070
	R-21[1]	2x6	29	0.141	0.105	0.086	0.080	0.074	0.069
	R-19	2x8	30	0.126	0.097	0.081	0.075	0.070	0.065
	R-22	2x8	31	0.121	0.094	0.079	0.073	0.068	0.064
	R-25	2x8	32	0.117	0.091	0.077	0.071	0.067	0.063
	R-30[1]	2x8	33	0.112	0.088	0.075	0.069	0.065	0.061
	R-30	2x10	34	0.102	0.081	0.070	0.065	0.061	0.058
	R-38[1]	2x10	35	0.096	0.077	0.067	0063	0.059	0.056
	R-38	2 x 12	36	0.088	0.072	0.063	0.059	0.056	0.053
	Foamed Plastic or Cellulose Insulation[3]	2 x 4	37	0.182	0.133	0.105	0.095	0.087	0.080
		2 x 6	38	0.146	0.112	0.092	0.084	0.078	0.072
		2 x 8	39	0.121	0.097	0.081	0.075	0.070	0.066
		2 x 10	40	0.101	0.084	0.072	0.067	0.063	0.059
		2 x 12	41	0.087	0.074	0.064	0.060	0.057	0.054

This table contains U-factors for steel or metal framed walls in low-rise residential buildings where the thickness of the framing members is 18 gauge or thinner. Table 4.3 in Joint Appendix 4 must be used for steel or metal-.framed walls in nonresidential buildings (including high-rise residential buildings and hotels and motels) and in low rise residential buildings if the thickness of the framing members are thinner than 18 gauge.

If continuous insulation is not used, then choices are made from Column A. In this case, the insulation is installed only between the framing members. When continuous insulation is also used, it is typically installed

on the exterior side of the wall, but can also be used on the inside. The continuous insulation is typically a rigid polystyrene or polyisocyanurate foam insulation.

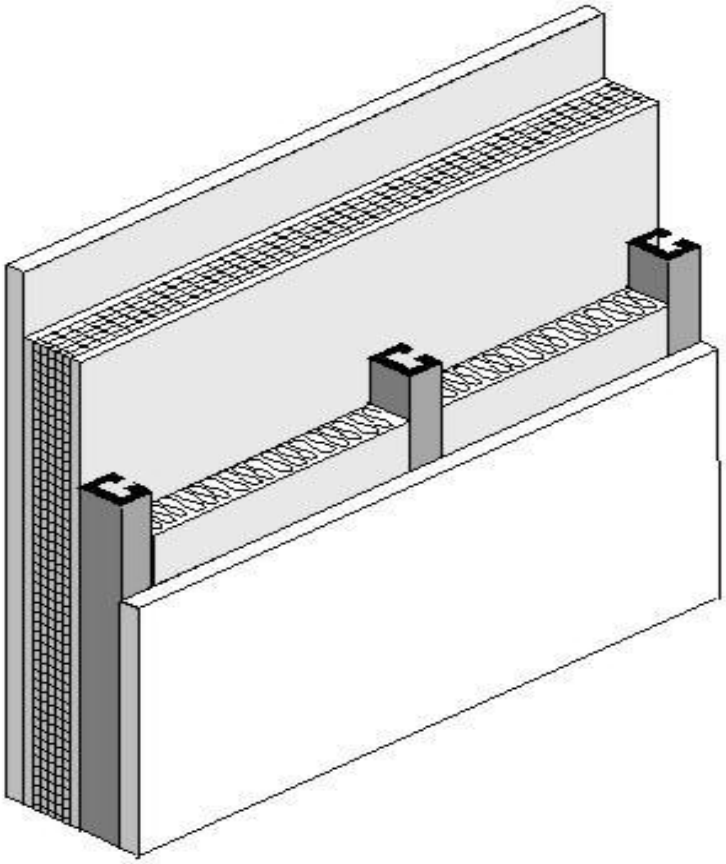

Figure 4.3.4 – Metal Framed Wall

When this table is used manually, the R-value of continuous insulation shall be equal to or greater than the R-value published in the continuous insulation columns. Continuous insulation of at least R-2 must exist in order to use values for continuous insulation. No interpolation is permitted when data from the table is used manually. CEC approved ACMs, however, may determine the U-factor for any amount of continuous insulation or for unusual construction assemblies using Equation 4-1 and Equation 4-2.

Assumptions: Values in this table were calculated using the zone calculation method. The construction assembly assumes an exterior air film of R-0.17, a 7/8 inch layer of siding or stucco averaging R-0.18, building paper of R-0.06 (BP01), continuous insulation (if any), the insulation / framing insulation layer, 1/2 inch gypsum of R-0.45 gypsum board (GP01), and an interior air film 0.68. The framing factor is assumed to be 25 percent for 16 inch stud spacing and 22 percent for 24 inch spacing. To account for the increased wall framing percentage, the frame spacing input to the EZ Frame program is reduced to 13.218 inches for 16 inch stud spacing and 15.231 inches for 24 inch stud spacing. The stud web thickness is assumed to be 0.038 inches, which is a 50/50 mix of 18 gauge and 20 gauge C-channel studs. This value was confirmed to be representative of low-rise residential construction by polling several California-based light-gauge steel structural engineers and light-gauge steel framers. Foam plastic and cellulose are assumed to entirely fill the cavity and have a thermal resistance of R-3.6 per inch. Actual cavity depth is 3.5 inch for 2x4, 5.5 inch for 2x6, 8 inch for 2x8, 10 inch for 2x10, and 12 inches for 2x12. High density R-30 insulation is assumed to be 8.5 inch thick batt and R-38 is assumed to be 10.5 inches thick.

Table 4.3.5~~10~~ – Properties of Hollow Unit Masonry Walls

			Partly Grouted with Ungrouted Cells								
			Solid Grout			Empty			Insulated		
Thickness	**Type**		A			B			C		
		1	U-factor	C-factor	HC	U-factor	C-factor	HC	U-factor	C-factor	HC
12"	LW CMU	**2**	0.51	0.90	23	0.43	0.68	14.8	0.30	0.40	14.8
	MW CMU	**3**	0.54	1.00	23.9	0.46	0.76	15.6	0.33	0.46	15.6
	NW CMU	**4**	0.57	1.11	24.8	0.49	0.84	16.5	0.36	0.52	16.5
10"	LW CMU	**5**	0.55	1.03	18.9	0.46	0.76	12.6	0.34	0.48	12.6
	MW CMU	**6**	0.59	1.18	19.7	0.49	0.84	13.4	0.37	0.54	13.4
	NW CMU	**7**	0.62	1.31	20.5	0.52	0.93	14.2	0.41	0.63	14.2
8"	LW CMU	**8**	0.62	1.31	15.1	0.50	0.87	9.9	0.37	0.54	9.9
	MW CMU	**9**	0.65	1.45	15.7	0.53	0.96	10.5	0.41	0.63	10.5
	NW CMU	**10**	0.69	1.67	16.3	0.56	1.07	11.1	0.44	0.70	11.1
	Clay Unit	**11**	0.57	1.11	15.1	0.47	0.78	11.4	0.39	0.58	11.4
6"	LW CMU	**12**	0.68	1.61	10.9	0.54	1.00	7.9	0.44	0.70	7.9
	MW CMU	**13**	0.72	1.86	11.4	0.58	1.14	8.4	0.48	0.81	8.4
	NW CMU	**14**	0.76	2.15	11.9	0.61	1.27	8.9	0.52	0.93	8.9
	Clay Unit	**15**	0.65	1.45	11.1	0.52	0.93	8.6	0.45	0.73	8.6

The walls addressed in this table are rarely used in residential construction, but are common in some types of nonresidential construction. The tables include four types of hollow masonry units: lightweight concrete masonry units (CMU), medium weight CMU, normal weight CMU, and hollow clay masonry units. ASTM C-90 defines these masonry products in more detail.

Masonry used in California must be reinforced to withstand wind loads and earthquakes. This is achieved by installing reinforcing steel and grouting the cells in both a vertical and horizontal direction. Since grouting the cells affects thermal performance, data is provided for three cases: where every cell is grouted, where the cells are partially grouted and the remaining cells are left empty, and where the cells are partially grouted and the remaining cells are filled with perlite or some other insulating material.

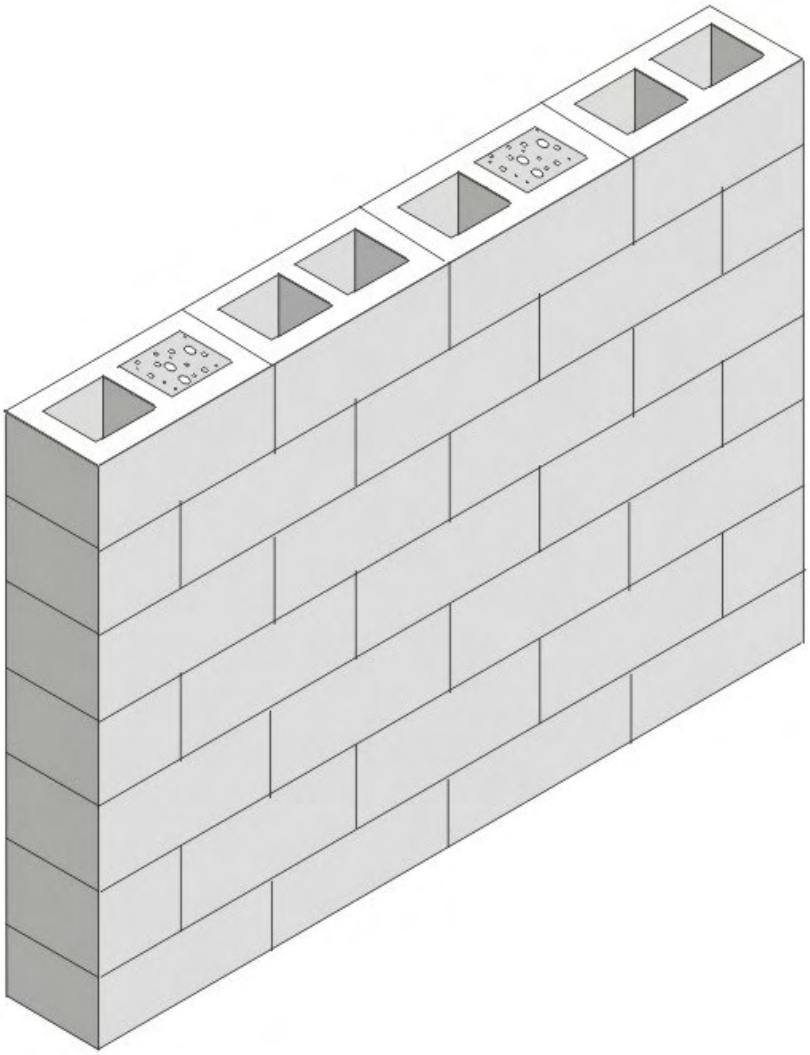

Figure 4.3.5 – Masonry Wall

For each of these conditions the U-factor, C-factor and heat capacity (HC) is published. There are other properties of mass materials that may be needed in compliance calculations, but these values can be determined from the published data using the procedures in Modeling Constructions in the Nonresidential ACM contained at the end of this appendix.

Assumptions: Data is taken from *Energy Calculations and Data*, CMACN, 1986, Berkeley Solar Group; Concrete Masonry Association of California and Nevada. The density of the CMU material (not counting the grouted or hollow cells) is 105 lb/ft^3 for lightweight, 115 lb/ft^3 for medium weight and 125 lb/ft^3 for normal weight. The density of the clay unit material is 130 lb/ft^3. For all four types of masonry units, data is provided for thicknesses of 6 in., 8 in., 10 in., and 12 in. For the partially grouted cases, vertical cells are assumed to be grouted at 32 in. OnCenter. Reinforcing in the horizontal direction is at 48 in. OC. Wall thicknesses given in the table are nominal; actual thicknesses are 3/8 in. less. Insulating material inside unit masonry hollow is assumed to be perlite.

Table 4.3.6 – Properties of Solid Unit Masonry and Solid Concrete Walls

			Wall Thickness, inches									
			3	**4**	**5**	**6**	**7**	**8**	**9**	**10**	**11**	**12**
Type	**Property**		**A**	**B**	**C**	**D**	**E**	**F**	**G**	**H**	**I**	**J**
LW CMU	U-Factor		0.79	0.71	0.65	0.59	0.54	0.51	0.47	0.44	0.42	0.39
	C-Factor	**1**	2.38	1.79	1.43	1.18	1.01	0.88	0.79	0.71	0.65	0.59
	HC		5.3	7.00	8.80	10.50	12.30	14.00	15.80	17.50	19.30	21.00
MW CMU	U-Factor		0.84	0.77	0.70	0.65	0.61	0.57	0.53	0.50	0.48	0.45
	C-Factor	**2**	2.94	2.22	1.75	1.47	1.25	1.10	0.98	0.88	0.80	0.74
	HC		5.80	7.70	9.60	11.5	13.40	15.30	17.30	19.20	21.10	23.00
NW CMU	U-Factor		0.88	0.82	0.76	0.71	0.67	0.63	0.60	0.56	0.53	0.51
	C-Factor	**3**	3.57	2.70	2.17	1.79	1.54	1.35	1.20	1.03	0.98	0.90
	HC		6.30	8.30	10.40	12.50	14.6	16.70	18.80	20.80	22.90	25.00
Clay Brick	U-Factor		0.80	0.72	0.66	na	na	Na	na	Na	na	na
	C-Factor	**4**	2.50	1.86	1.50	na	na	Na	na	Na	na	na
	HC		6.30	8.40	10.43	na	na	Na	na	Na	na	na
Concrete	U-Factor		0.96	0.91	0.86	0.82	0.78	0.74	0.71	0.68	0.65	0.63
	C-Factor	**5**	5.22	4.02	3.20	2.71	2.31	1.99	1.79	1.61	1.45	1.36
	HC		7.20	9.60	12.00	14.40	16.80	19.20	21.60	24.00	26.40	28.80

This table provides thermal performance information for solid masonry units and solid concrete walls.

The walls addressed in this table are rarely used in residential construction, but are common in some types of nonresidential construction.

There are other properties of mass materials that may be needed in compliance calculations, but these values can be determined from the published data using the procedures in Modeling Constructions in the Nonresidential ACM contained at the end of ACM Joint Appendix 4.

When insulation is added to the outside of masonry walls and/or when the inside is furred and insulated, the performance data in this table may be adjusted using Equation 4-4 and Equation 4-5 in coordination with Table 4.3.13.

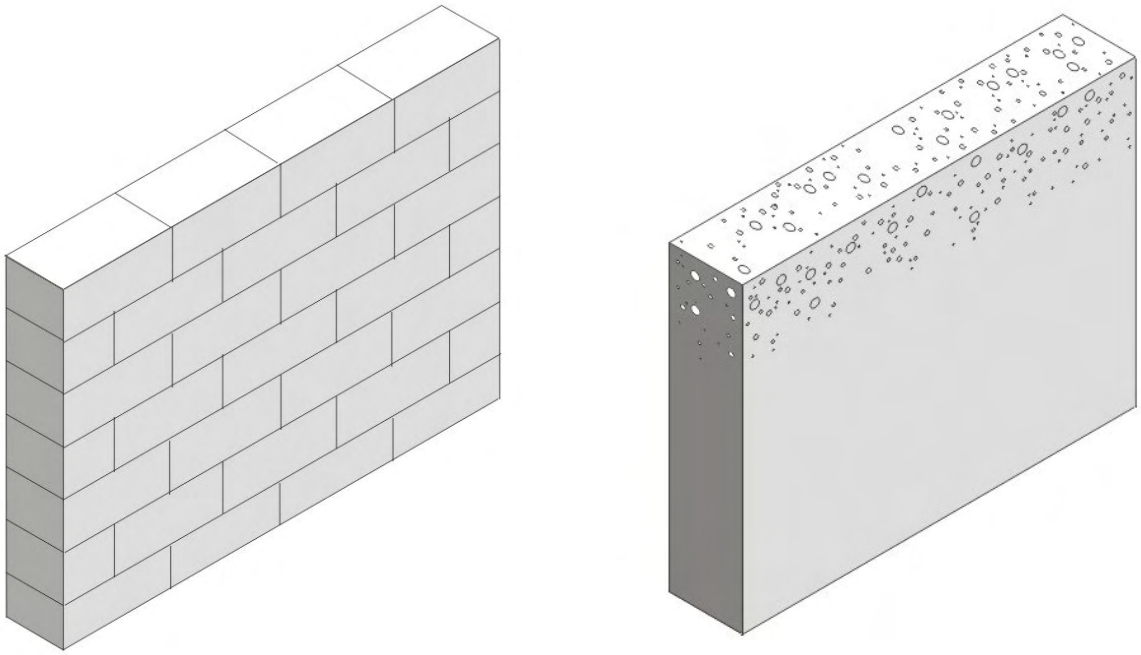

Figure 4.3.6 – Solid Unit Masonry (left) and Solid Concrete (right) Walls

~~For each of these conditions the U-factor, C-factor and heat capacity (HC) is published. There are other properties of mass materials that may be needed in compliance calculations, but these values can be determined from the published data using the procedures in Modeling Constructions in the Nonresidential ACM contained at the end of ACM Joint Appendix 4.~~

~~When insulation is added to the outside of masonry walls and/or when the inside is furred and insulated, the performance data in this table may be adjusted using~~

~~Equation 4-4 and Equation 4-5 in coordination with Table 4.3.13.~~

Assumptions: Data is taken from ASHRAE/IESNA Standard 90.1-2004. The density of the CMU material is 105 lb/ft³ for lightweight, 115 lb/ft³ for medium weight and 125 lb/ft³ for normal weight. The density of the clay unit material is 130 lb/ft³ and the density of the concrete is 144 lb/ft³. For all five types of masonry walls, the U-factor, C-factor and heat capacity (HC) is provided for thicknesses of 3 in., 4 in., and 5 in. ASTM C-90 provides more information on the classification of masonry walls.

Table 4.3.7 – Properties of Concrete Sandwich Panels

Percent Concrete Web	Steel Penetrates Insulation	Performance Factor		Insulation Thickness (R-value)				
				1.5 (7.0)	**2.0 (9.3)**	**3.0 (14.0)**	**4.0 (18.6)**	**6.0 (27.9)**
				A	**B**	**C**	**D**	**E**
0%	No	U-factor	**1**	0.122	0.095	0.066	0.051	0.034
		C-factor		0.136	0.104	0.070	0.053	0.035
		HC		16.13	16.13	16.13	16.13	16.13
	Yes	U-factor	**2**	0.164	0.128	0.091	0.070	0.048
		C-factor		0.190	0.144	0.099	0.074	0.050
		HC		16.13	16.13	16.13	16.13	16.13
10%	No	U-factor	**3**	0.476	0.435	0.345	0.286	0.217
		C-factor		0.800	0.690	0.488	0.377	0.267
		HC		16.53	16.66	16.93	17.20	17.74
	Yes	U-factor	**4**	0.500	0.435	0.357	0.303	0.227
		C-factor		0.870	0.690	0.513	0.408	0.282
		HC		16.53	16.66	16.93	17.20	17.74
20%	No	U-factor	**5**	0.588	0.556	0.476	0.417	0.333
		C-factor		1.176	1.053	0.800	0.645	0.465
		HC		16.93	17.20	17.74	18.28	19.35
	Yes	U-factor	**6**	0.588	0.556	0.476	0.417	0.333
		C-factor		1.176	1.053	0.800	0.645	0.465
		HC		16.93	17.20	17.74	18.28	19.35

This table provides U-factors, C-factors, and heat capacity (HC) data for concrete sandwich panels. Concrete sandwich panels, as the name suggests, consist of two layers of concrete that sandwich a layer of insulation. The wall system can be constructed in the field or in a factory. One method of field construction is where the wall panels are formed in a flat position using the concrete floor slab of the building as the bottom surface. After the panel has set, it is hoisted with a crane into its final vertical position.

Both the percent of concrete web and the percent steel are factors in determining the thermal performance of walls. The insulation layer in this type of concrete sandwich panel generally does not extend over the entire surface of the wall. To provide structural integrity, a certain portion of the wall is solid concrete, which ties together the two concrete layers. This portion is known as the concrete web. The thermal performance of concrete sandwich panels depends on the percent of the wall that is concrete web. Data is provided for concrete webs representing 0%, 10% and 20% of the opaque wall surface. In some cases, the concrete layers are tied together by structural steel that penetrates the insulation layer. Data is provided for the case where this steel is present and for cases where it is not.

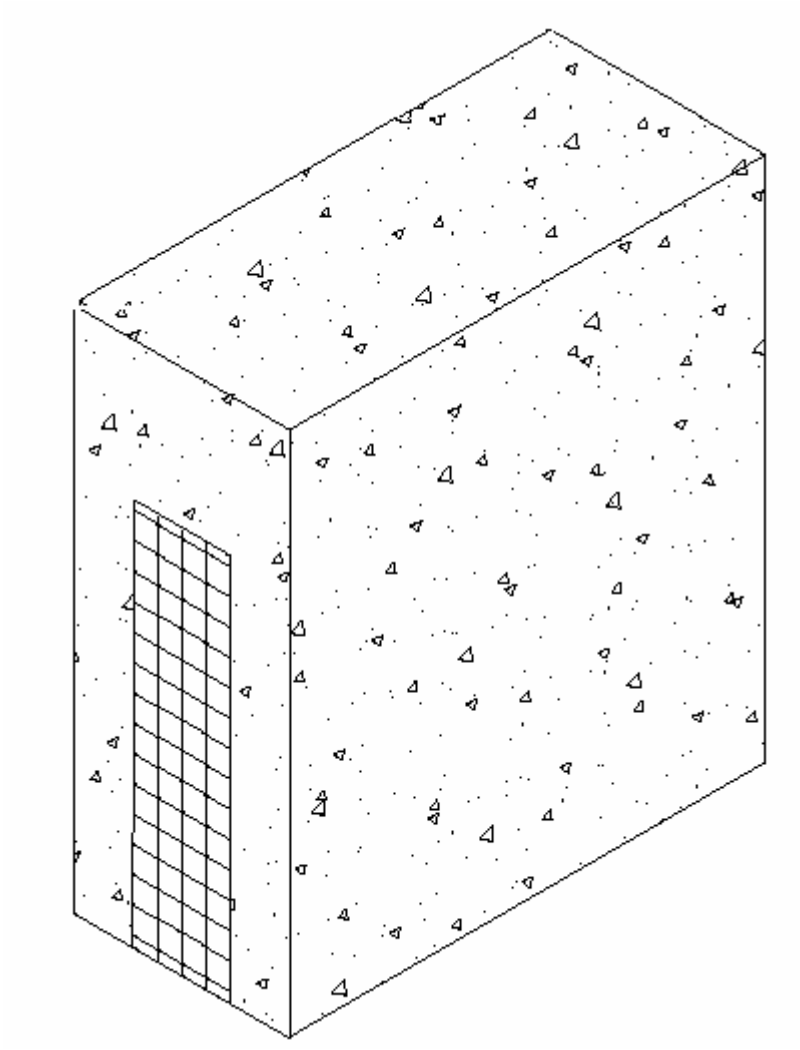

Figure 4.3.7 – Concrete Sandwich Panel

Other properties of mass materials such as density, conductivity, specific heat and wall weight may be needed in compliance calculations and these properties may be determined from the published data in Table 4.3.7 using the procedures in Modeling Constructions in the Nonresidential ACM contained at the end of this ACM Joint Appendix 4.

Values from this table may be combined with values from Table 4.3.13 when a furring layer is added to the inside of the wall and/or continuous insulation is added to the outside of the wall. Adjustments for additional layers shall follow the procedure of Equation 4-4 and Equation 4-5.

Assumptions. U-factors include an inside air film of 0.68 and an exterior air film of 0.17. Conductivity of the concrete is assumed to be 0.215 Btu/h-ºF-f, density is 150 lb/ft³, the thickness of each side of the sandwich panel is 0.5 ft. The data was calculated by Construction Technologies Laboratories, Inc. and published in the Thermal Mass Handbook, Concrete and Masonry Design Provisions Using ASHRAE/IESNA 90.1-1989, National Codes and Standards Council of the Concrete and Masonry Industries, 1994.

Table 4.3.8 – U-factors for Spandrel Panels and Glass Curtain Walls

			Rated R-value of Insulation between Framing Members							
			None	R-4	R-7	R-10	R-15	R-20	R-25	R-30
Frame Type	**Spandrel Panel**		**A**	**B**	**C**	**D**	**E**	**F**	**G**	**H**
Aluminum without Thermal Break	Single glass pane, stone, or metal panel	**1**	0.361	0.248	0.229	0.219	0.210	0.206	0.203	0.201
	Double glass with no low-e coatings	**2**	0.301	0.239	0.224	0.216	0.209	0.205	0.202	0.200
	Triple or low-e glass	**3**	0.269	0.231	0.220	0.214	0.208	0.204	0.202	0.200
Aluminum with Thermal Break	Single glass pane, stone, or metal panel	**4**	0.351	0.215	0.191	0.179	0.168	0.161	0.158	0.155
	Double glass with no low-e coatings	**5**	0.280	0.204	0.186	0.175	0.166	0.160	0.157	0.154
	Triple or low-e glass	**6**	0.242	0.195	0.181	0.172	0.164	0.159	0.156	0.154
Structural Glazing	Single glass pane, stone, or metal panel	**7**	0.350	0.195	0.165	0.149	0.135	0.127	0.122	0.119
	Double glass with no low-e coatings	**8**	0.272	0.181	0.158	0.145	0.133	0.126	0.121	0.118
	Triple or low-e glass	**9**	0.227	0.169	0.152	0.141	0.131	0.124	0.120	0.117
No framing or Insulation is Continuous	Single glass pane, stone, or metal panel	**10**	0.361	0.148	0.102	0.078	0.056	0.044	0.036	0.031
	Double glass with no low-e coatings	**11**	0.301	0.137	0.097	0.075	0.055	0.043	0.035	0.030
	Triple or low-e glass	**12**	0.269	0.130	0.039	0.073	0.053	0.042	0.035	0.030

This table has U-factors for the spandrel section of glass and other curtain wall systems. Design factors that affect performance are the type of framing, the type of spandrel panel and the R-value of insulation.

Four framing conditions are considered in the table. The first is the common case where standard aluminum mullions are used. Standard mullions provide a thermal bridge through the insulation, reducing its effectiveness. The second case is for metal framing members that have a thermal break. A thermal break frame uses a urethane or other non-metallic element to separate the metal exposed to outside conditions from the metal that is exposed to interior conditions. The third case is for structural glazing or systems where there is no exposed mullion on the interior. The fourth case is for the condition where there is no framing or the insulation is continuous and uninterrupted by framing. The columns in the table can be used for any specified level of insulation between framing members installed in framed curtain walls or spandrel panels.

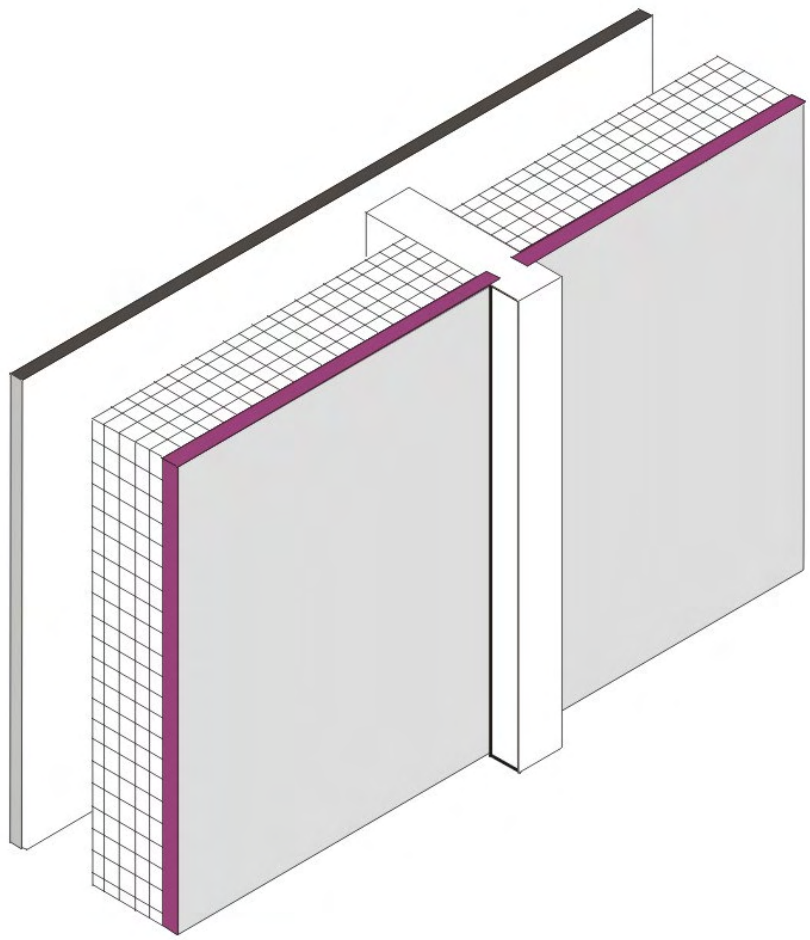

Figure 4.3.8 – Spandrel Panel

There are three spandrel panel cases considered in the table. The first is for a panel that provides little or no insulating value. This includes single pane glass, stone veneer, metal panels, or pre-case concrete less than 2 inches thick. The second case is for insulating glass. Sometimes insulating glass is used so that the spandrel panel looks similar to the vision glass. The third case is for triple glass or double glass that has a low-e coating.

Insulation levels are shown in the columns of the table. When the table is used manually, the R-value of insulation shall be equal to or greater than the R-value published in the columns. No interpolation is permitted when data from the table is selected manually. California Energy Commission approved Alternative Calculation Methods, including those used for prescriptive compliance, may accurately account for any amount of continuous insulation or for unusual construction assemblies using Equation 4-1 and Equation 4-2. If the curtain wall has an insulated metal-framed wall on the inside, then values from this table may be combined with values from Table 4.3.4 or Table 4.3.13 using the procedures of Equation 4-2 or Equation 4-3.

Assumptions. The U-factors in Table 4.3.8 were derived from a regression analysis of the values for "Glass Only Center of Glass" and "Curtain Wall" in the 2005 ASHRAE Handbook of Fundamentals, Chapter 30, Table 4. The U-factors in Table 4.3.8 include an exterior air film with an R-value of 0.17 and an interior air film R-value of 0.68, which are accounted for in the values from the 2005 ASHRAE Handbook of Fundamentals. The construction assembly consists of the Frame Type and Spandrel Panel combinations listed in Table 4.3.8, an air gap with an R-value of 1.39 (3/4 inch gap, 50 ºF mean temperature and 30 ºF temperature difference), and 5/8 inch gypsum board with an R-value of 0.56 that provides the interior finish. The gypsum board is assumed to span between the window sill and a channel at the floor.

The following equations were used when no rigid insulation is added to the assembly.

Aluminum Without Thermal Break

$$U_{Overall} = \frac{1}{\left(R_{Gypsum} + R_{AirGap}\right) + \left(\frac{1}{0.3007 + 0.8882 \times U_{CenterofGlass}}\right)}$$ Equation 4-6

Aluminum With Thermal Break

$$U_{Overall} = \frac{1}{\left(R_{Gypsum} + R_{AirGap}\right) + \left(\frac{1}{0.1936 + 0.8814 \times U_{CenterofGlass}}\right)}$$ Equation 4-7

Structural Glazing

$$U_{Overall} = \frac{1}{\left(R_{Gypsum} + R_{AirGap}\right) + \left(\frac{1}{0.1238 + 0.9448 \times U_{CenterofGlass}}\right)}$$ Equation 4-8

The following equations were used when rigid insulation is added to the assembly.

Aluminum Without Thermal Break

$$U_{Overall} = \frac{1}{\left(R_{Gypsum} + R_{AirGap}\right) + \left(\frac{1}{0.3007 + 0.8882 \times \left(\left(\frac{1}{R_{AddedInsulation}}\right) + U_{CenterofGlass}\right)}\right)}$$ Equation 4-9

Aluminum With Thermal Break

$$U_{Overall} = \frac{1}{\left(R_{Gypsum} + R_{AirGap}\right) + \left(\frac{1}{0.1936 + 0.8814 \times \left(\left(\frac{1}{R_{AddedInsulation}}\right) + U_{CenterofGlass}\right)}\right)}$$ Equation 4-10

Structural Glazing

$$U_{Overall} = \frac{1}{\left(R_{Gypsum} + R_{AirGap}\right) + \left(\frac{1}{0.1238 + 0.9448 \times \left(\left(\frac{1}{R_{AddedInsulation}}\right) + U_{CenterofGlass}\right)}\right)}$$ Equation 4-11

Table 4.3.9 – U-factors for Metal Building Walls

Insulation System	Rated R-Value of Insulation		Continuous Rigid Insulation							
			None	R-2	R-4	R-6	R-7	R-8	R-10	R-14
			A	B	C	D	E	F	G	H
Single Layer of Batt Insulation	None	1	1.18	0.351	0.206	0.146	0.127	0.113	0.092	0.067
	R-6	2	0.184	0.135	0.106	0.087	0.080	0.074	0.065	0.051
	R-10	3	0.134	0.106	0.087	0.074	0.069	0.065	0.057	0.047
	R-11	4	0.123	0.099	0.082	0.071	0.066	0.062	0.055	0.045
	R-13	5	0.113	0.092	0.078	0.067	0.063	0.059	0.053	0.044
Double Layer of Batt Insulation	R-6 + R-13	6	0.07	0.061	0.055	0.049	0.047	0.045	0.041	0.035
	R-10 + R-13	7	0.061	0.054	0.049	0.045	0.043	0.041	0.038	0.033
	R-13 + R-13	8	0.057	0.051	0.046	0.042	0.041	0.039	0.036	0.032
	R-19 + R-13	9	0.048	0.044	0.040	0.037	0.036	0.035	0.032	0.029

Double layer or batt insulation may not be able to have Continuous rigid insulation added.

The U-factors in this table are intended for use with metal building walls. This type of construction is typical for manufacturing and warehouse facilities, but is used for other building types as well. The typical method of insulating this type of building is to stretch vinyl backed fiberglass insulation over the metal girts before the metal siding is attached with metal screws. With this method, the insulation is compressed at each girt, reducing its effectiveness. The first part of the table contains values for this insulation technique. The second section of the table has data for systems that have two layers of insulation. In this section layers are listed from inside to outside.

For the majority of cases, values will be selected from column A of this table. Builders or designers may increase thermal performance by adding a rigid continuous insulation layer between the metal siding and the structural supports. When this table is used manually, the R-value of continuous insulation shall be equal to or greater than the R-value published in the continuous insulation columns. No interpolation is permitted when data from the table is used manually. CEC approved compliance software, however, may determine the U-factor for any amount of continuous insulation using Equation 4-1.

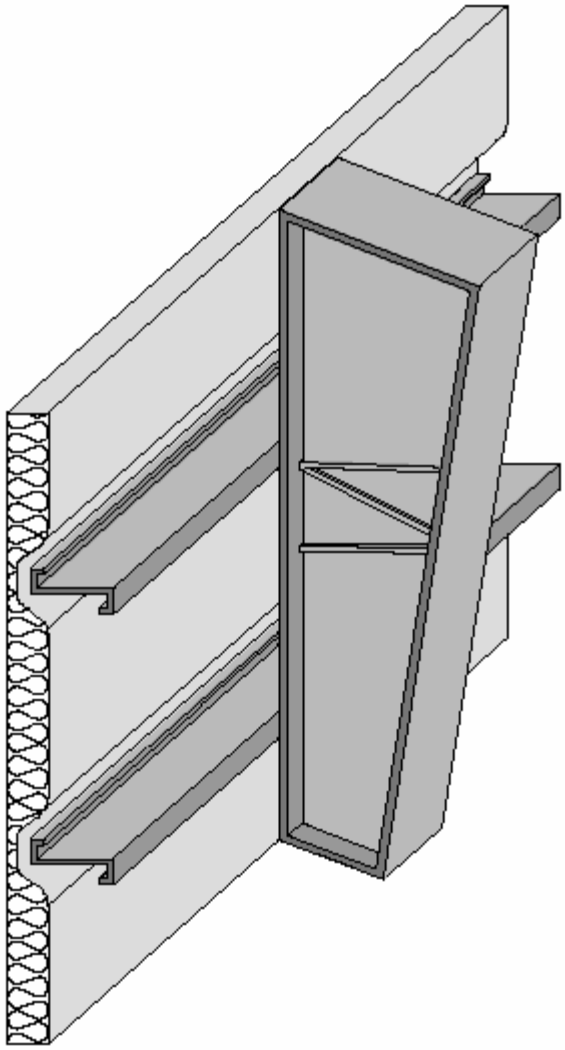

Figure 4.3.9 – Metal Building Wall

Assumptions: Data in Column A of this table is taken from the ASHRAE/IESNA Standard 90.1-2004, Appendix A. The data in columns beyond A are calculated using Equation 4-1.

Table 4.3.10 – U-factors for Insulated Metal Panel Walls

		U-factor (Btu/^{0}F-ft^2)
Panel Thickness		**A**
2”	**1**	0.078
2 ½”	**2**	0.063
3”	**3**	0.053
4”	**4**	0.041
5”	**5**	0.033
6”	**6**	0.027

This table contains thermal performance data (U-factors) for foamed-in-place, insulated metal panels consisting of liquid polyurethane or polyisocyanurate injected between metal skins in individual molds or on fully automated production lines. Metal building construction is the most common application for this product where the metal panel is fastened to the frame of the structure. This table can only be used for insulated panels that are factory built. This table does not apply to panels that utilize polystyrene, or to field applied products such as spray applied insulations.

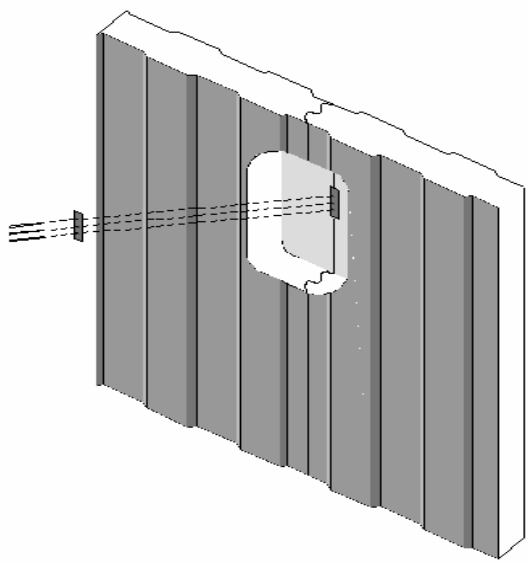

Figure 4.3.10 –Insulated Metal Panel Walls

Assumptions. These data are calculated using the parallel path method documented in the 2005 ASHRAE Handbook of Fundamentals. These calculations assume an exterior air film of R-0.17, light ga~~u~~uge metal exterior ~~R~~of -0.0747 inch thickness, continuous insulation R-5.9 per inch, light gauge metal interior ~~R-~~of 0.0747 inche thickness, interior air film (heat flow horizontal) of R-0.68. The panels are assumed to be continuous with no framing penetration. The R-value of the metal is negligible.

Table 4.3.11 – Thermal Properties of Log Home Walls

		U-factor	Heat Capacity (HC)
Log Diameter		A	
6”	**1**	0.133	4.04
8”	**2**	0.102	6.06
10”	**3**	0.083	6.73
12”	**4**	0.070	8.08
14”	**5**	0.060	9.42
16”	**6**	0.053	10.77

This table has U-factors and heat capacity data for log homes Data is provided for logs in six thicknesses ranging from 6 in. to 16 in. If other thermal properties are needed such as density, weight, conductivity, etc., use the procedures in Modeling Constructions in the Nonresidential ACM contained at the end of this ACM Joint Appendix 4. CEC approved ACMs may adjust the data for interior furring using data from Table 4.3.13 and the procedure from Equation 4-2.

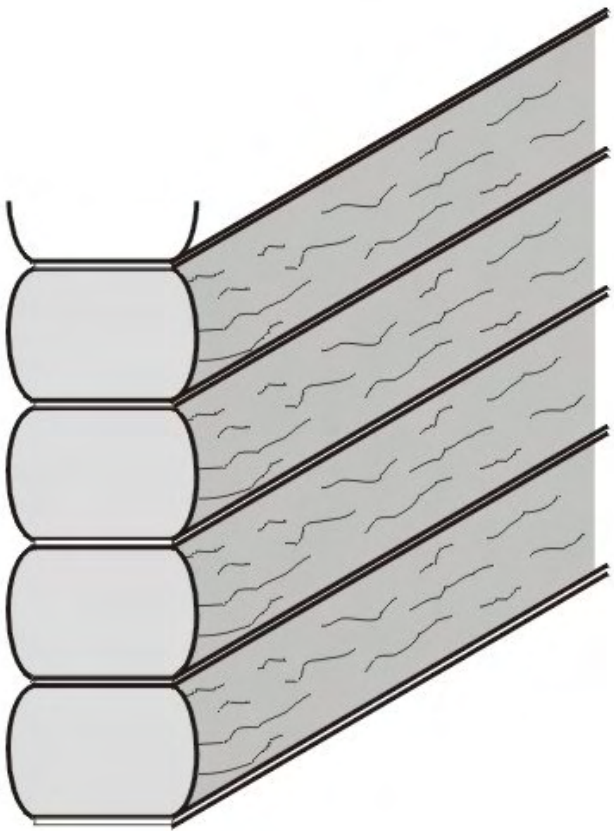

Figure 4.3.11 – Log Home Walls

Assumptions: Calculations are based on ASHRAE series method of calculation, 2005 ASHRAE Handbook of Fundamentals. Values assume a log R-value of R-1.25/inch, an average wall thickness of 90% of the log diameter, an interior air film of R-0.68 and an exterior air film of R-0.17. Values do not account for presence of windows or doors. Construction assumes no additional siding or insulation. Heat Capacity is based on a hardwood density of 26.6 lb/ft^3 and a specific heat of 0.39 Btu/lb-ºF. An exterior air film of R-0.17 and an interior film of R-0.68 are assumed.

Table 4.3.12 – Thermal and Mass Properties of Straw Bale Walls

		A
R-value	1	30
U-factor		0.033
Heat CapacityBtu/ft^2*°F]		2.24

This table has data that may be used for straw bale construction. This is an alternative construction technique used in some rural areas. The technique is not commonly used for production homes.

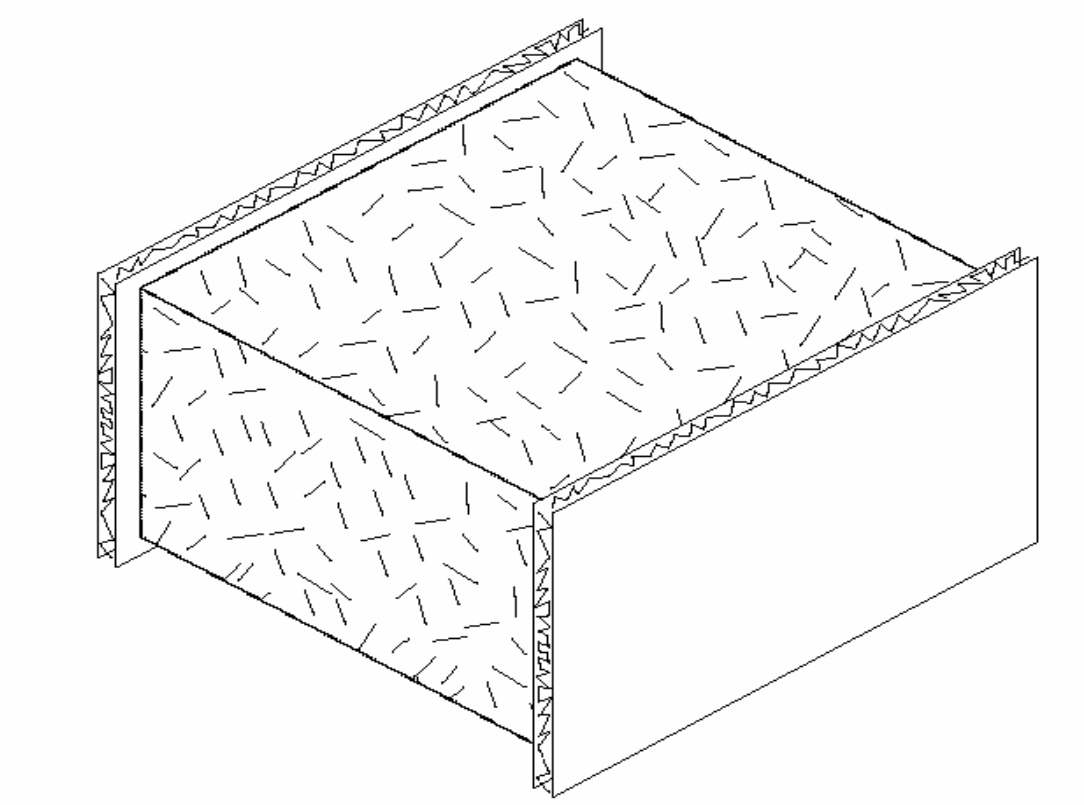

Figure 4.3.12 – Straw Bale Wall

Assumptions. The construction consists of an exterior film of R-0.17, stucco and lath of R-0.18, the straw bale, interior plaster of R-0.47, and an interior air film of 0.68. Straw bale must have a minimum cross section of 22 inch by 16 inch, and shall have a thermal resistance of R-30, whether stacked so the walls are 23 inch wide or 16 inch wide. Due to the higher resistance to heat flow across the grain of the straws, a bale laid on edge with a nominal 16 inch horizontal thickness has the same R-value (R-30) as a bale laid flat. Framing is assumed to not penetrate more than 25 percent of the way through the straw bale.

Table 4.3.13 – Effective R-values for Interior or Exterior Insulation Layers

			R-value of Insulation Installed in Furring Space																					
			0	1	2	3	4	5	6	7	8	9	10	11	12	13	14	15	16	17	18	19	20	21
Thick-ness	Frame Type		A	B	C	D	E	F	G	H	I	J	K	L	M	N	O	P	Q	R	S	T	U	V
Any	None	1	0.5	1.5	2.5	3.5	4.5	5.5	6.5	7.5	8.5	9.5	10.5	11.5	12.5	13.5	14.5	15.5	16.5	17.5	18.5	19.5	20.5	21.5
0.5"	Wood	2	1.3	1.3	1.9	2.4	2.7	n.a.	n.a.	n.a.	n.a.	n.a.	n.a.	n.a.	n.a.	n.a.	n.a.	n.a.	n.a.	n.a.	n.a.	n.a.	n.a.	n.a.
	Metal	3	0.9	0.9	1.1	1.1	1.2	n.a.	n.a.	n.a.	n.a.	n.a.	n.a.	n.a.	n.a.	n.a.	n.a.	n.a.	n.a.	n.a.	n.a.	n.a.	n.a.	n.a.
0.75"	Wood	4	1.4	1.4	2.1	2.7	3.1	3.5	3.8	n.a.	n.a.	n.a.	n.a.	n.a.	n.a.	n.a.	n.a.	n.a.	n.a.	n.a.	n.a.	n.a.	n.a.	n.a.
	Metal	5	1.0	1.0	1.3	1.4	1.5	1.5	1.6	n.a.	n.a.	n.a.	n.a.	n.a.	n.a.	n.a.	n.a.	n.a.	n.a.	n.a.	n.a.	n.a.	n.a.	n.a.
1.0"	Wood	6	1.3	1.5	2.2	2.9	3.4	3.9	4.3	4.6	4.9	n.a.	n.a.	n.a.	n.a.	n.a.	n.a.	n.a.	n.a.	n.a.	n.a.	n.a.	n.a.	n.a.
	Metal	7	1.0	1.1	1.4	1.6	1.7	1.8	1.8	1.9	1.9	n.a.	n.a.	n.a.	n.a.	n.a.	n.a.	n.a.	n.a.	n.a.	n.a.	n.a.	n.a.	n.a.
1.5"	Wood	8	1.3	1.5	2.4	3.1	3.8	4.4	4.9	5.4	5.8	6.2	6.5	6.8	7.1	n.a.	n.a.	n.a.	n.a.	n.a.	n.a.	n.a.	n.a.	n.a.
	Metal	9	1.1	1.2	1.6	1.9	2.1	2.2	2.3	2.4	2.5	2.5	2.6	2.6	2.7	n.a.	n.a.	n.a.	n.a.	n.a.	n.a.	n.a.	n.a.	n.a.
2"	Wood	10	1.4	1.5	2.5	3.3	4.0	4.7	5.3	5.9	6.4	6.9	7.3	7.7	8.1	8.4	8.7	9.0	9.3	n.a.	n.a.	n.a.	n.a.	n.a.
	Metal	11	1.1	1.2	1.7	2.1	2.3	2.5	2.7	2.8	2.9	3.0	3.1	3.2	3.2	3.3	3.3	3.4	3.4	n.a.	n.a.	n.a.	n.a.	n.a.
2.5"	Wood	12	1.4	1.5	2.5	3.4	4.2	4.9	5.6	6.3	6.8	7.4	7.9	8.4	8.8	9.2	9.6	10.0	10.3	10.6	10.9	11.2	11.5	n.a.
	Metal	13	1.2	1.3	1.8	2.3	2.6	2.8	3.0	3.2	3.3	3.5	3.6	3.6	3.7	3.8	3.9	3.9	4.0	4.0	4.1	4.1	4.1	n.a.
3"	Wood	14	1.4	1.5	2.5	3.5	4.3	5.1	5.8	6.5	7.2	7.8	8.3	8.9	9.4	9.9	10.3	10.7	11.1	11.5	11.9	12.2	12.5	12.9
	Metal	15	1.2	1.3	1.9	2.4	2.8	3.1	3.3	3.5	3.7	3.8	4.0	4.1	4.2	4.3	4.4	4.4	4.5	4.6	4.6	4.7	4.7	4.8
3.5"	Wood	16	1.4	1.5	2.6	3.5	4.4	5.2	6.0	6.7	7.4	8.1	8.7	9.3	9.8	10.4	10.9	11.3	11.8	12.2	12.6	13.0	13.4	13.8
	Metal	17	1.2	1.3	2.0	2.5	2.9	3.2	3.5	3.8	4.0	4.2	4.3	4.5	4.6	4.7	4.8	4.9	5.0	5.1	5.1	5.2	5.2	5.3
4"	Wood	18	1.4	1.6	2.6	3.6	4.5	5.3	6.1	6.9	7.6	8.3	9.0	9.6	10.2	10.8	11.3	11.9	12.4	12.8	13.3	13.7	14.2	14.6
	Metal	19	1.2	1.3	2.0	2.6	3.0	3.4	3.7	4.0	4.2	4.5	4.6	4.8	5.0	5.1	5.2	5.3	5.4	5.5	5.6	5.7	5.8	5.8
4.5"	Wood	20	1.4	1.6	2.6	3.6	4.5	5.4	6.2	7.1	7.8	8.5	9.2	9.9	10.5	11.2	11.7	12.3	12.8	13.3	13.8	14.3	14.8	15.2
	Metal	21	1.2	1.3	2.1	2.6	3.1	3.5	3.9	4.2	4.5	4.7	4.9	5.1	5.3	5.4	5.6	5.7	5.8	5.9	6.0	6.1	6.2	6.3
5"	Wood	22	1.4	1.6	2.6	3.6	4.6	5.5	6.3	7.2	8	8.7	9.4	10.1	10.8	11.5	12.1	12.7	13.2	13.8	14.3	14.8	15.3	15.8
	Metal	23	1.2	1.4	2.1	2.7	3.2	3.7	4.1	4.4	4.7	5.0	5.2	5.4	5.6	5.8	5.9	6.1	6.2	6.3	6.5	6.6	6.7	6.8
5.5"	Wood	24	1.4	1.6	2.6	3.6	4.6	5.5	6.4	7.3	8.1	8.9	9.6	10.3	11.0	11.7	12.4	13.0	13.6	14.2	14.7	15.3	15.8	16.3
	Metal	25	1.3	1.4	2.1	2.8	3.3	3.8	4.2	4.6	4.9	5.2	5.4	5.7	5.9	6.1	6.3	6.4	6.6	6.7	6.8	7.0	7.1	7.2
EIFS		26	0.0	1.0	2.0	3.0	4.0	5.0	6.0	7.0	8.0	9.0	10.0	11.0	12.0	13.0	14.0	15.0	16.0	17.0	18.0	19.0	20.0	21.0

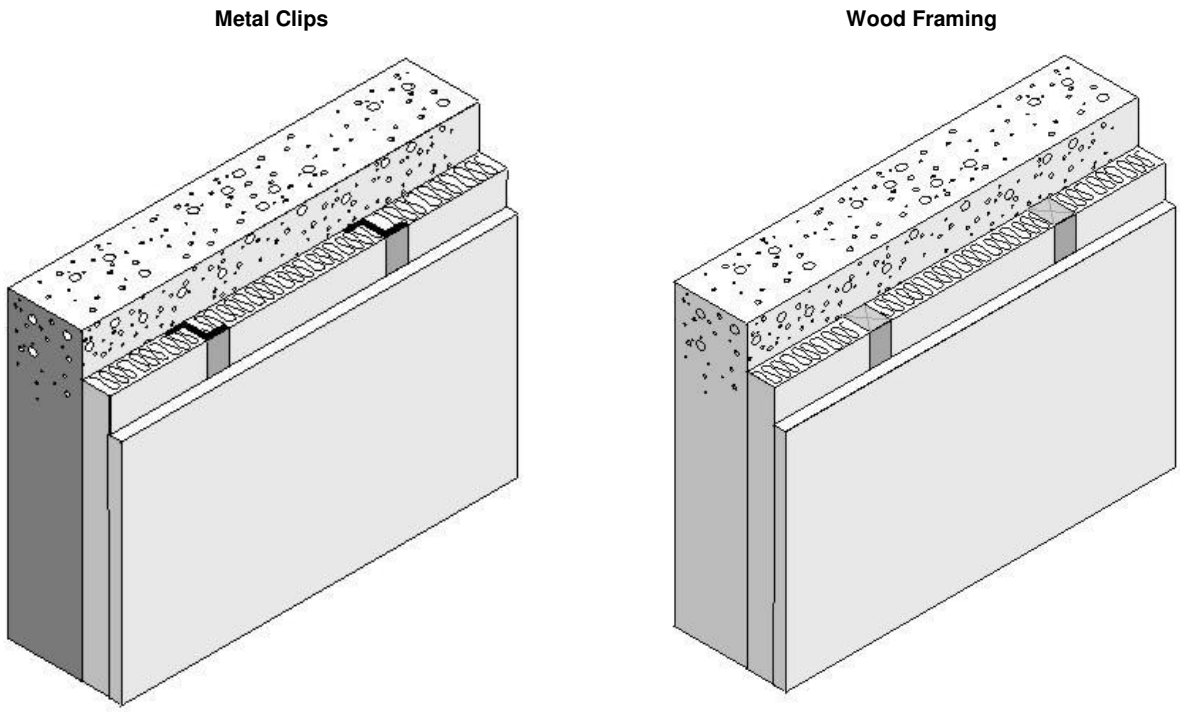

Figure 4.3.13 – Interior or Exterior Insulation Layers

This table is used in combination with other tables and Equation 4-1 and Equation 4-2 to account for interior furring and continuous insulation added to other constructions. .

Assumptions. Data is taken from ASHRAE/IESNA Standard 90.1-2004 All furring thickness values given are actual dimensions. All values include 0.5 inch gypsum board on the inner surface, interior surface resistances not included. The metal furring is 24 inch on center, 24 guage, Z-type Metal Furring. The wood furring is 24 inch on center, Douglas-Fir Larch Wood Furring, density = 34.9 lb/ft^3. Insulation assumed to fill the furring space.

4.4 Floors and Slabs

Table 4.4.1 – Standard U-factors for Wood-Framed Floors with a Crawl Space

Framing Spacing	Nominal Framing Size	R-Value Cavity Insul.		Rated R-value of Continuous Insulation							
				R-0	R-2	R-4	R-6	R-7	R-8	R-10	R-14
				A	B	C	D	E	F	G	H
16 in. OC	Any	None	1	0.097	0.081	0.070	0.061	0.058	0.055	0.049	0.041
	2 x 6	R-11	2	0.049	0.045	0.041	0.038	0.037	0.035	0.033	0.029
		R-13	3	0.046	0.042	0.039	0.036	0.035	0.033	0.031	0.028
	2 x 8	R-19	4	0.037	0.034	0.032	0.030	0.029	0.029	0.027	0.024
		R-22	5	0.034	0.032	0.030	0.028	0.027	0.027	0.025	0.023
	2 x 10	R-25	6	0.031	0.029	0.028	0.026	0.025	0.025	0.024	0.022
		R-30	7	0.028	0.026	0.025	0.024	0.023	0.023	0.022	0.020
	2 x 12	R-38	8	0.024	0.023	0.022	0.021	0.020	0.020	0.019	0.018
24 in. OC	Any	None	9	0.098	0.082	0.070	0.062	0.058	0.055	0.049	0.041
	2 x 6	R-11	10	0.049	0.045	0.041	0.038	0.036	0.035	0.033	0.029
		R-13	11	0.045	0.041	0.038	0.035	0.034	0.033	0.031	0.028
	2 x 8	R-19	12	0.036	0.034	0.032	0.030	0.029	0.028	0.027	0.024
		R-22	13	0.033	0.031	0.029	0.028	0.027	0.026	0.025	0.023
	2 x 10	R-25	14	0.030	0.029	0.027	0.026	0.025	0.024	0.023	0.021
		R-30	15	0.027	0.026	0.024	0.023	0.023	0.022	0.021	0.020
	2 x 12	R-38	16	0.023	0.022	0.021	0.020	0.020	0.020	0.019	0.017

Notes:

1. In order to use the U-factors listed in this section, exterior raised-floor insulation shall be installed between floor joists with a means of support that prevents the insulation from falling, sagging or deteriorating. Two approaches that accomplish this are:
2. Nailing insulation hangers 18 inches apart prior to rolling out the insulation. Hangers are heavy wires up to 48 inches long with pointed ends, which provide positive wood penetration.
3. Attaching wire mesh to form a basket between joists to support the insulation. Mesh is nailed or stapled to the underside of the joists.

This table contains U-factors for wood framed floors built over a ventilated crawlspace. This construction is common for low-rise residential buildings and for Type IV nonresidential buildings.

If continuous insulation is not used, then choices are made from Column A. In this case, the insulation is installed only between the framing members. Continuous insulation is not common for wood floors over a crawlspace, but if credit is taken, the insulation may be installed either above or below the framing members. The continuous insulation is typically a rigid polystyrene or polyisocyanurate foam insulation.

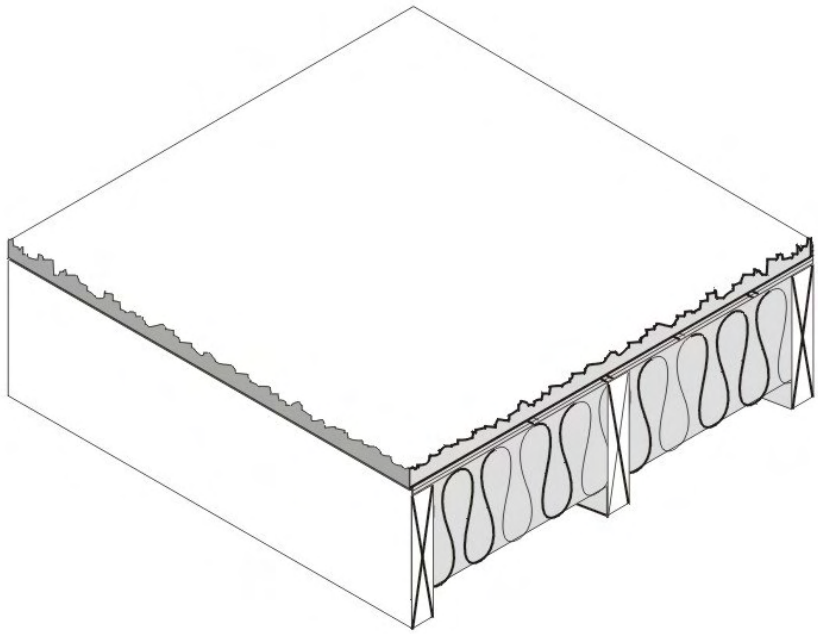

Figure 4.4.1 – Wood Framed Floor with a Crawl Space

When this table is used manually, the R-value of continuous insulation shall be equal to or greater than the R-value published in the continuous insulation columns. Continuous insulation of at least R-2 must exist in order to use columns B and beyond. No interpolation is permitted when data from the table is used manually. CEC approved compliance software, however, may determine the U-factor for any amount of continuous insulation or for unusual construction assemblies using Equation 4-1 and Equation 4-2.

If the crawlspace is not ventilated and is modeled as a controlled ventilation crawlspace (CVC), then values from this table shall not be used. Values from Table 4.21 shall be used instead and the crawlspace shall be modeled as a separate and unconditioned zone.

Assumptions: Calculations use the ASHRAE parallel heat flow method documented in the 2005 ASHRAE Handbook of Fundamentals. These calculations assume an exterior air film of R-0.17, a vented crawlspace for an effective R-6, a continuous insulation layer (if any), the insulation / framing layer, 5/8 inch wood based sheathing (Custom), carpet and pad of R-2.08 (CP01), and an interior air film (heat flow down) of R-0.92. The framing factor is assumed to be 10 percent for 16 inch stud spacing and 7 percent for 24 inch spacing.

Table 4.4.2 – Standard U-factors for Wood Framed Floors without a Crawl Space

Spacing	Nominal Framing Size	R-Value of Cavity Insul.		Rated R-value of Continuous Insulation							
				R-0	R-2	R-4	R-6	R-7	R-8	R-10	R-14
				A	B	C	D	E	F	G	H
16 in. OC	Any	None	**1**	0.238	0.161	0.122	0.098	0.089	0.082	0.070	0.055
	2 x 6	R-11	**2**	0.071	0.062	0.055	0.050	0.047	0.045	0.041	0.036
	(5.50 in)	R-13	**3**	0.064	0.057	0.051	0.046	0.044	0.042	0.039	0.034
	2 x 8	R-19	**4**	0.048	0.044	0.040	0.037	0.036	0.035	0.033	0.029
	(7.25 in.)	R-22	**5**	0.044	0.040	0.037	0.035	0.033	0.032	0.030	0.027
	2 x 10	R-25	**6**	0.039	0.036	0.034	0.031	0.030	0.030	0.028	0.025
	(9.25 in.)	R-30	**7**	0.034	0.032	0.030	0.028	0.028	0.027	0.025	0.023
	2 x 12 (11.25 in.)	R-38	**8**	0.029	0.027	0.026	0.024	0.024	0.023	0.022	0.020
24 in. OC	Any	None	**9**	0.243	0.163	0.123	0.099	0.090	0.083	0.071	0.055
	2 x 6	R-11	**10**	0.070	0.061	0.054	0.049	0.047	0.045	0.041	0.035
	(5.50 in.)	R-13	**11**	0.062	0.055	0.050	0.045	0.043	0.042	0.038	0.033
	2 x 8	R-19	**12**	0.047	0.043	0.039	0.037	0.035	0.034	0.032	0.028
	(7.25 in.)	R-22	**13**	0.042	0.039	0.036	0.034	0.033	0.032	0.030	0.026
	2 x 10	R-25	**14**	0.037	0.035	0.033	0.031	0.030	0.029	0.027	0.025
	(9.25 in.)	R-30	**15**	0.033	0.031	0.029	0.027	0.027	0.026	0.025	0.022
	2 x 12 (11.25 in.)	R-38	**16**	0.027	0.026	0.025	0.023	0.023	0.022	0.021	0.020

This table contains U-factors for wood framed floors that are exposed to ambient (outdoor) conditions. This construction is common for low-rise residential buildings and for Type 4 nonresidential buildings.

If continuous insulation is not used, then choices are made from Column A. In this case, the insulation is installed only between the framing members. If credit is taken for continuous insulation, the insulation may be installed either above or below the framing members.

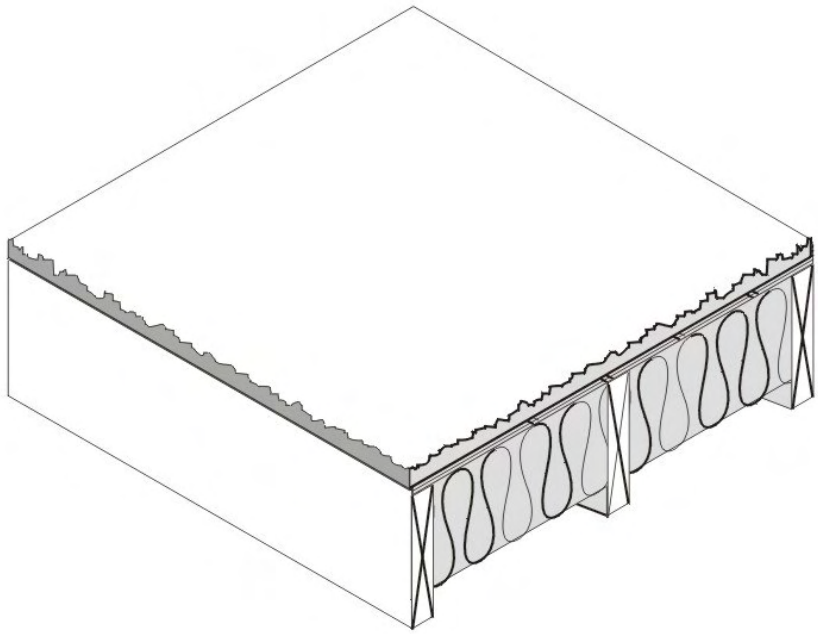

Figure 4.4.2 – Wood Framed Floor without a Crawl Space

When this table is used manually, the R-value of continuous insulation shall be equal to or greater than the R-value published in the continuous insulation columns. Continuous insulation of at least R-2 must exist in order to use data from columns B and beyond. No interpolation is permitted when data from the table is used manually. CEC approved software, however, may determine the U-factor for any amount of continuous insulation or for unusual construction assemblies using Equation 4-1 and Equation 4-2.

Assumptions: Calculations use the ASHRAE parallel heat flow method documented in the 2005 ASHRAE Handbook of Fundamentals. These calculations assume an exterior air film of R-0.17, a continuous insulation layer (if any), the cavity insulation / framing layer, 5/8 inch wood based sheathing (Custom), carpet and pad of R-2.08 (CP01), and an interior air film (heat flow down) of R-0.92.

Table 4.4.3 – Standard U-factors for Wood Foam Panel (SIP) Floors

				Rated R-value of Continuous Insulation [1]							
				None	R-2	R-4	R-6	R-7	R-8	R-10	R-14
Crawlspace	**Insulation R-value**	**Panel Thickness**		**A**	**B**	**C**	**D**	**E**	**F**	**G**	**H**
No	R-14	4 ½"	**1**	0.059	0.052	0.047	0.043	0.042	0.040	0.037	0.032
	R-22	6 ½"	**2**	0.042	0.038	0.036	0.033	0.032	0.031	0.029	0.026
	R-28	8 ¼"	**3**	0.033	0.031	0.029	0.028	0.027	0.026	0.025	0.023
	R-36	10 ¼"	**4**	0.027	0.026	0.024	0.023	0.023	0.022	0.021	0.020
Yes	R-14	4 ½"	**5**	0.043	0.040	0.037	0.034	0.033	0.032	0.030	0.027
	R-22	6 ½"	**6**	0.033	0.031	0.029	0.027	0.027	0.026	0.025	0.022
	R-28	8 ¼"	**7**	0.027	0.026	0.025	0.023	0.023	0.022	0.021	0.020
	R-36	10 ¼"	**8**	0.023	0.022	0.021	0.020	0.020	0.019	0.019	0.017

Notes:

[1] For credit, continuous insulation shall be at least R-2 and may be installed on either the inside or the exterior of the wall.

This table gives U-factors for structurally insulated panels used in floor construction. This is a construction system that consists of rigid foam insulation sandwiched between two layers of plywood or oriented strand board (OSB). For floors 2x wood spacers are assumed to separate the OSB panels and carry the floor load.

If continuous insulation is not used, then choices are made from Column A. When continuous insulation is also used, this is typically installed on the exterior side of the floor, but can also be used on the inside. The continuous insulation is typically a rigid polystyrene or polyisocyanurate foam insulation.

When this table is used manually, the R-value of continuous insulation shall be equal to or greater than the R-value published in the continuous insulation columns. Continuous insulation of at least R-2 must exist in order to use this table. CEC approved compliance software, however, may determine the U-factor for any amount of continuous insulation or for unusual construction assemblies using Equation 4-1 and Equation 4-2.

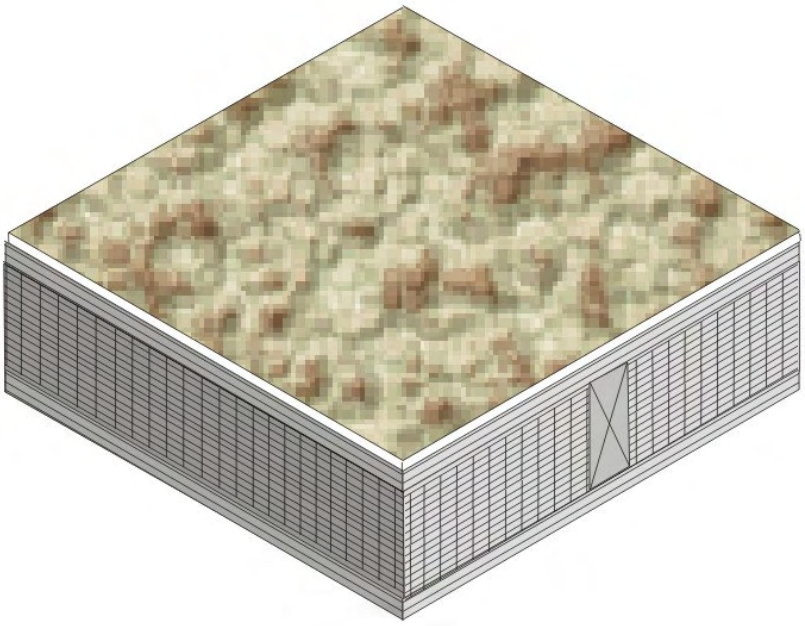

Figure 4.4.3 – Wood Foam Panel (SIP) Floor

Assumptions: These data are calculated using the parallel path method documented in the 2005 ASHRAE Handbook of Fundamentals. These calculations assume an exterior air film of R-0.17, a vented crawlspace with an effective R-6, 7/16 inch of OSB of R-0.44, the insulation / framing layer, 7/16 inch of OSB, carpet and pad of R-2.08 (CP01) and an interior air film (heat flow down) of R-0.92. Calculations assume a 2x framing spline every 4 foot on center. Framing section assumes an exterior air film of R-0.17, a vented crawlspace of R-6, 7/16 inch of OSB at R-0.44, 2x framing, 7/16 inch of OSB, carpet and pad of R-2.08 (CP01) and an interior air film of R-0.92.

Table 4.4.4 – Standard U-factors for Metal-Framed Floors with a Crawl Space

Framing Spacing	Nominal Framing Size	Cavity Insulation R-Value:		Rated R-value of Continuous Insulation							
				R-0	R-2	R-4	R-6	R-7	R-8	R-10	R-14
				A	B	C	D	E	ºF	G	H
16 in. OC	Any	None	1	0.094	0.079	0.068	0.060	0.057	0.054	0.048	0.041
	2 x 6	R-11	2	0.065	0.058	0.052	0.047	0.045	0.043	0.039	0.034
		R-13	3	0.063	0.056	0.050	0.046	0.044	0.042	0.039	0.033
		R-19	4	0.059	0.053	0.048	0.044	0.042	0.040	0.037	0.032
	2 x 8	R-19	5	0.058	0.052	0.047	0.043	0.041	0.040	0.037	0.032
		R-22	6	0.056	0.050	0.046	0.042	0.040	0.039	0.036	0.031
	2 x 10	R-30	7	0.051	0.046	0.042	0.039	0.038	0.036	0.034	0.030
	2 x 12	R-38	8	0.048	0.044	0.040	0.037	0.036	0.035	0.032	0.029
24 in. OC	Any	None	9	0.094	0.079	0.068	0.060	0.057	0.054	0.048	0.041
	2 x 6	R-11	10	0.061	0.054	0.049	0.045	0.043	0.041	0.038	0.033
		R-13	11	0.058	0.052	0.047	0.043	0.041	0.040	0.037	0.032
		R-19	12	0.053	0.048	0.044	0.040	0.039	0.037	0.035	0.030
	2 x 8	R-19	13	0.051	0.046	0.042	0.039	0.038	0.036	0.034	0.030
		R-22	14	0.049	0.045	0.041	0.038	0.036	0.035	0.033	0.029
	2 x 10	R-30	15	0.045	0.041	0.038	0.035	0.034	0.033	0.031	0.028
	2 x 12	R-38	16	0.041	0.038	0.035	0.033	0.032	0.031	0.029	0.026

Notes:

In order to use the U-factors listed in this table, exterior raised-floor insulation shall be installed between floor joists with a means of support that prevents the insulation from falling, sagging or deteriorating. Two approaches that accomplish this are:

- Attaching insulation hangers 18 inches apart prior to rolling out the insulation. Hangers are heavy wires up to 48 inches long with pointed ends.
- Attaching wire mesh to form a basket between joists to support the insulation. Mesh is nailed or stapled to the underside of the joists.

This table contains U-factors for metal-framed floors built over a crawlspace. The constructions represented are similar to those in Table 4.4.1, except that wood framing is replaced with metal framing. Cavity insulation is installed between the framing members. Since the steel is not as large a cross section as wood, the insulation needs to be wider than that used with wood to fit in between the steel framing members.

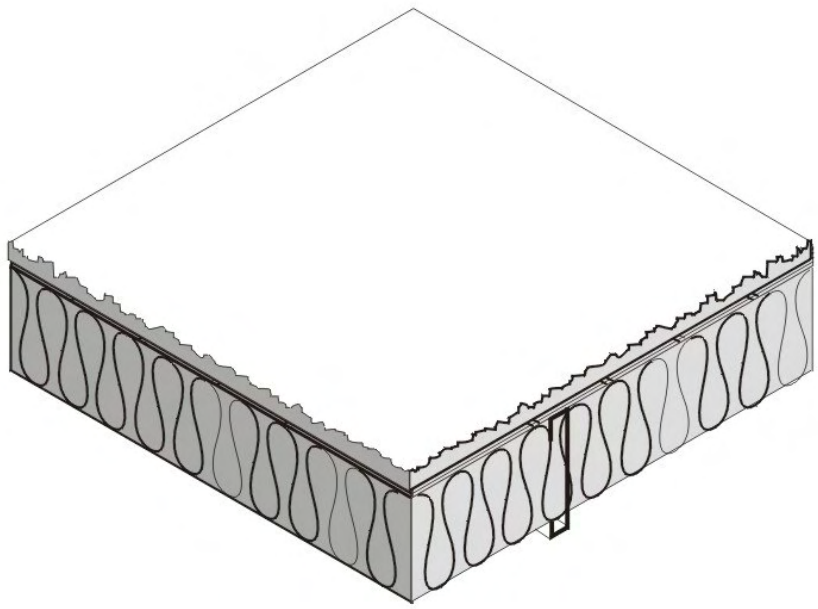

Figure 4.4.4 – Metal Framed Floors with a Crawl Space

For the majority of cases, values will be selected from column A of this table. Column A applies for the common situation where batt insulation is supported between framing members. Builders or designers may increase thermal performance by adding a continuous insulation layer either above or below the framing members.

When this table is used manually, the R-value of continuous insulation shall be equal to or greater than the R-value published in the continuous insulation columns. No interpolation is permitted when data from the table is used manually. CEC approved compliance software, however, may determine the U-factor for any amount of continuous insulation and for unusual construction layers using Equation 4-1 and Equation 4-2.

Assumptions: Calculations are based on the ASHRAE Zone Method Calculation, 2005 ASHRAE Handbook of Fundamentals These calculations assume an exterior air film of R-0.17, a vented crawlspace for an effective R-6, a continuous insulation layer (if any), the insulation / framing layer, 5/8 inch wood based sheathing (Custom), carpet and pad of R-2.08 (CP01), and an interior air film (heat flow down) of R-0.92. The effect of the crawlspace is approximated by an additional R-6 of insulation. The internal default framing percentages are 10 percent for 16 inch on center and 7 percent for 24 inch on center. Steel Framing has a 1.5 inch flange and is 0.075 inch thick steel (14 gauge) with no knockouts. U-factors are calculated using EZ frame 2.0B.

Table 4.4.5 – Standard U-factors for Metal-Framed Floors without a Crawl Space

Spacing	Nominal Framing Size	Cavity Insulation R-Value		Rated R-value of Continuous Insulation							
				R-0	R-2	R-4	R-6	R-7	R-8	R-10	R-14
				A	B	C	D	E	F	G	H
16 in. OC	Any	None	1	0.253	0.168	0.126	0.100	0.091	0.084	0.072	0.056
	2 x 6	R-11	2	0.108	0.089	0.075	0.066	0.062	0.058	0.052	0.043
		R-13	3	0.102	0.085	0.072	0.063	0.060	0.056	0.050	0.042
		R-19	4	0.092	0.078	0.067	0.059	0.056	0.053	0.048	0.040
	2 x 8	R-19	5	0.088	0.075	0.065	0.058	0.054	0.052	0.047	0.039
		R-22	6	0.085	0.073	0.063	0.056	0.053	0.051	0.046	0.039
	2 x 10	R-30	7	0.075	0.065	0.058	0.052	0.049	0.047	0.043	0.037
	2 x 12	R-38	8	0.068	0.060	0.053	0.048	0.046	0.044	0.040	0.035
24 in. OC	Any	None	9	0.253	0.168	0.126	0.100	0.091	0.084	0.072	0.056
	2 x 6	R-11	10	0.095	0.080	0.069	0.061	0.057	0.054	0.049	0.041
		R-13	11	0.087	0.074	0.065	0.057	0.054	0.051	0.047	0.039
		R-19	12	0.077	0.067	0.059	0.053	0.050	0.048	0.044	0.037
	2 x 8	R-19	13	0.074	0.064	0.057	0.051	0.049	0.046	0.043	0.036
		R-22	14	0.07	0.061	0.055	0.049	0.047	0.045	0.041	0.035
	2 x 10	R-30	15	0.061	0.054	0.049	0.045	0.043	0.041	0.038	0.033
	2 x 12	R-38	16	0.054	0.049	0.044	0.041	0.039	0.038	0.035	0.031

Notes:

In order to use the U-factors listed in this section, exterior raised-floor insulation shall be installed between floor joists with a means of support that prevents the insulation from falling, sagging or deteriorating. Two approaches that accomplish this are:

- Attaching insulation hangers 18 inches apart prior to rolling out the insulation. Hangers are heavy wires up to 48 inches long with pointed ends.
- Attaching wire mesh to form a basket between joists to support the insulation. Mesh is nailed or stapled to the underside of the joists.

This table contains U-factors for metal-framed floors built over outdoor conditions. For the majority of cases, values will be selected from column A of this table. Column A applies for the common situation where batt insulation is supported between framing members. Builders or designers may increase thermal performance by adding a continuous insulation layer either above or below the framing members.

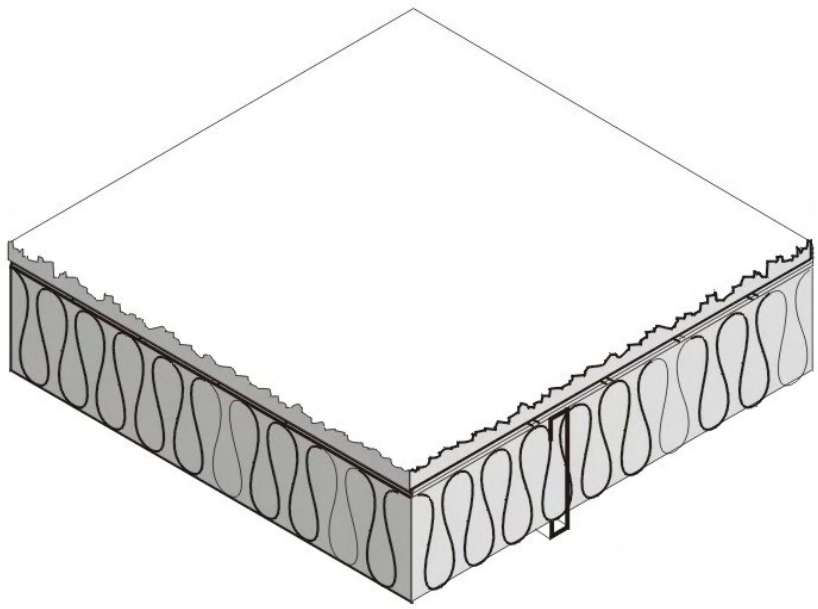

Figure 4.4.5 – Metal Framed Floors without a Crawl Space

When this table is used manually, the R-value of continuous insulation shall be equal to or greater than the R-value published in the continuous insulation columns. No interpolation is permitted when data from the table is used manually. CEC approved software, however, may determine the U-factor for any amount of continuous insulation and for unusual construction layers using Equation 4-1 and Equation 4-2.

Assumptions: Calculations are based on the ASHRAE Zone Method Calculation, 2005 ASHRAE Handbook of Fundamentals Handbook. These calculations assume an exterior air film of R-0.17, a continuous insulation layer (if any), the insulation / framing layer, 5/8 inch wood based sheathing (Custom), carpet and pad of R-2.08 (CP01), and an interior air film (heat flow down) of R-0.92. The internal default framing percentages are 10 percent for 16 inch on center and 7 percent for 24 inch on center. Steel Framing has a 1.5 inch flange and is 0.075 inch thick steel with no knockouts. U-factors calculated using EZ frame 2.0B.

Table 4.4.6 – Standard U-factors for Concrete Raised Floors

R-value of Insulation		Rated R-value of Continuous Insulation		
		Continuous Insulation Underneath	**Continuous Insulation Above Deck[1] with no Sleepers**	Continuous Insulation Above Deck[1] with Sleepers
		A	**B**	**C**
R-0	**1**	0.269	0.234	0.229
R-2	**2**	0.183	0.159	0.157
R-4	**3**	0.138	0.121	0.120
R-6	**4**	0.111	0.097	0.097
R-8	**5**	0.092	0.081	0.081
R-10	**6**	0.079	0.070	0.070
R-12	**7**	0.069	0.061	0.061
R-15	**8**	0.058	0.052	0.052
R-20	**9**	0.045	0.041	0.041
R-25	**10**	0.037	0.034	0.034
R-30	**11**	0.031	0.029	0.029

Notes:

[1] Above deck case includes a 5/8 inch layer of plywood between the insulation and the carpet and pad.

This table may be used only if the HC of the proposed design floor is greater than or equal to 7.0 Btu/ft²-ºF.

~~Table IV.25 – Standard U-factors for Concrete Raised Floors~~

~~R-value of Insulation~~		~~Rated R-value of Continuous Insulation~~		
		~~Continuous Insulation Underneath~~	~~Continuous Insulation Above Deck[1] with no Sleepers~~	~~Continuous Insulation Above Deck[1] with Sleepers~~
		~~A~~	~~B~~	~~C~~
~~R-0~~	~~1~~	~~0.315~~	~~0.253~~	~~0.253~~
~~R-2~~	~~2~~	~~0.193~~	~~0.168~~	~~0.165~~
~~R-4~~	~~3~~	~~0.139~~	~~0.126~~	~~0.127~~
~~R-6~~	~~4~~	~~0.109~~	~~0.101~~	~~0.104~~
~~R-8~~	~~5~~	~~0.090~~	~~0.084~~	~~0.089~~
~~R-10~~	~~6~~	~~0.076~~	~~0.072~~	~~0.078~~
~~R-12~~	~~7~~	~~0.066~~	~~0.063~~	~~0.070~~
~~R-15~~	~~8~~	~~0.055~~	~~0.053~~	~~0.061~~
~~R-20~~	~~9~~	~~0.043~~	~~0.042~~	~~0.051~~
~~R-25~~	~~10~~	~~0.035~~	~~0.035~~	~~0.045~~
~~R-30~~	~~11~~	~~0.030~~	~~0.029~~	~~0.040~~

~~**Notes:**~~

~~[1] Above deck case includes a 5/8" layer of plywood between the insulation and the carpet and pad.~~

~~This table may be used only if the HC of the proposed design floor is greater than or equal to 7.0 Btu/ft²-ºF.~~

Continuous Insulation Underneath

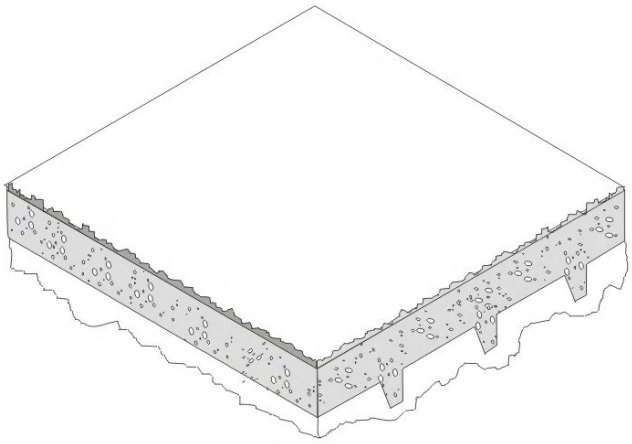

Continuous Insulation Above Deck

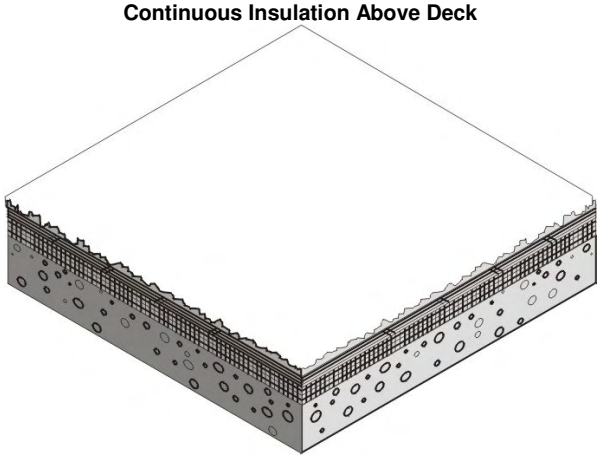

Figure 4.4.6 – Concrete Raised Floors

Assumptions: These calculations assume an exterior air film of R-0.17, a continuous insulation layer (if any), 4 inches of the lightweight concrete (CC14) over metal deck R-0, a continuous insulation layer (if any), 1.5 x 3.5 inch sleeper of R-0.99 per inch, R-0.80 air space between sleepers (2005 ASHRAE Handbook of Fundamentals, Chapter 25, Table 3), 5/8 inches of wood based sheathing (Custom) (if continuous insulation above deck), carpet and pad of R-2.08 (CP01), and an interior air film (heat flow down) of R-0.92. Sleepers have 10 percent framing factor. Below slab insulation assumes 6 inch wide beams 96 inches on center extending 8 inches below the slab.

Table 4.4.7 – F-Factors for Unheated Slab-on-Grade Floors

		Rated R-Value of Insulation												
Insulation Description		R-0	R-5	R-7.5	R-10	R-15	R-20	R-25	R-30	R-35	R-40	R-45	R-50	R-55
		A	**B**	**C**	**D**	**E**	**F**	**G**	**H**	**I**	**J**	**K**	**L**	**M**
None	**1**	0.73												
12 in. horizontal	**2**		0.72	0.71	0.71	0.71								
24 in. horizontal	**3**		0.70	0.70	0.70	0.69								
36 in. horizontal	**4**		0.68	0.67	0.66	0.66								
48 in. horizontal	**5**		0.67	0.65	0.64	0.63								
12 in. vertical	**6**		0.61	0.60	0.58	0.57	0.567	0.565	0.564					
24 in. vertical	**7**		0.58	0.56	0.54	0.52	0.510	0.505	0.502					
36 in. vertical	**8**		0.56	0.53	0.51	0.48	0.472	0.464	0.460					
48 in. vertical	**9**		0.54	0.51	0.48	0.45	0.434	0.424	0.419					
Fully insulated slab	**10**		0.46	0.41	0.36	0.30	0.261	0.233	0.213	0.198	0.186	0.176	0.168	0.161
Note: These values are used for slab edge conditions with and without carpet.														

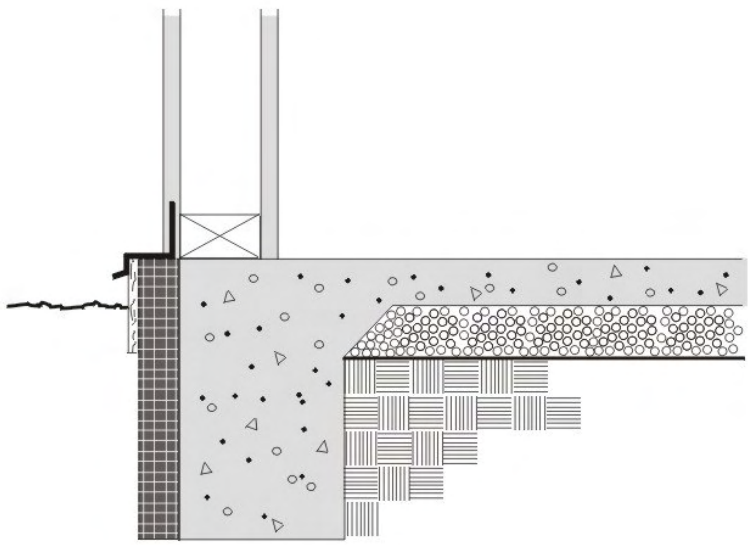

Figure 4.4.7 – Unheated Slab-on-Grade Floor

Horizontal insulation is continuous insulation that is applied directly to the underside of the slab and extends inward horizontally from the perimeter for the distance specified or continuous insulation that is applied downward from the top of the slab and then extends horizontally to the interior or the exterior from the perimeter for the distance specified. *Vertical insulation* is continuous insulation that is applied directly to the slab exterior, extending downward from the top of the slab for the distance specified. *Fully insulated slab* is continuous insulation that extends downward from the top to the slab and along the entire perimeter and completely covers the entire area under the slab.

Assumptions: Data of this table is taken from the ASHRAE/IESNA Standard 90.1-2004, Appendix A.

Table 4.4.8 – F-Factors for Heated Slab-on-Grade Floors

		Rated R-Value of Insulation												
		R-0	R-5	R-7.5	R-10	R-15	R-20	R-25	R-30	R-35	R-40	R-45	R-50	R-55
		A	B	C	D	E	F	G	H	I	J	K	L	M
None	**11**	1.35												
12 in. horizontal	**12**		1.31	1.31	1.30	1.30								
24 in. horizontal	**13**		1.28	1.27	1.26	1.25								
36 in. horizontal	**14**		1.24	1.21	1.20	1.18								
48 in. horizontal	**15**		1.20	1.17	1.13	1.11								
12 in. vertical	**16**		1.06	1.02	1.00	0.98	0.968	0.964	0.961					
24 in. vertical	**17**		0.99	0.95	0.90	0.86	0.843	0.832	0.827					
36 in. vertical	**18**		0.95	0.89	0.84	0.79	0.762	0.747	0.740					
48 in. vertical	**19**		0.91	0.85	0.78	0.72	0.688	0.671	0.659					
Fully insulated slab	**20**		0.74	0.64	0.55	0.44	0.373	0.326	0.296	0.273	0.255	0.239	0.227	0.217
Note: These values are used for slab edge conditions with and without carpet.														

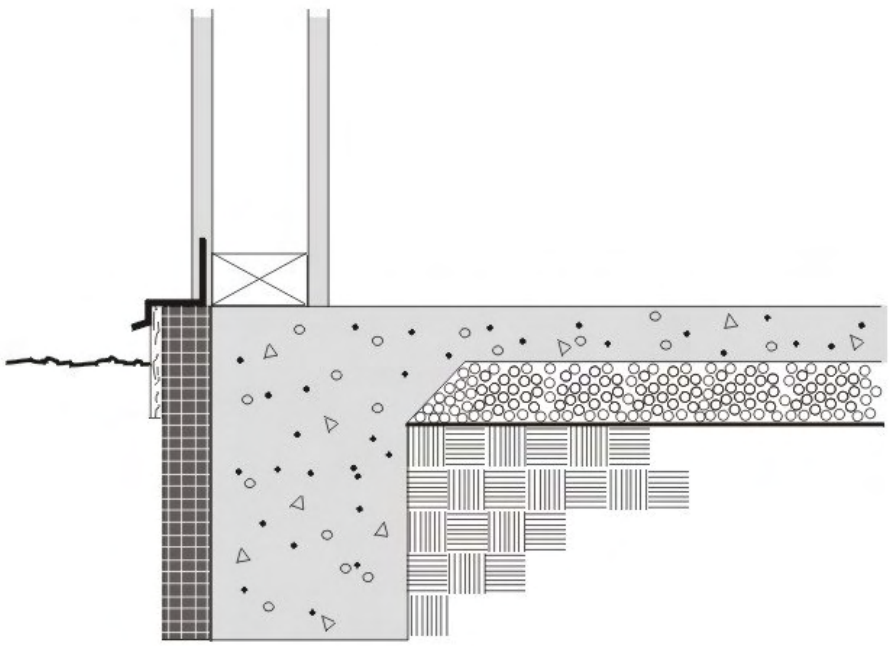

Figure 4.4.8 – Heated Slab-on-Grade Floor

Horizontal insulation is continuous insulation that is applied directly to the underside of the slab and extends inward horizontally from the perimeter for the distance specified or continuous insulation that is applied downward from the top of the slab and then extending horizontally to the interior or the exterior from the perimeter for the distance specified. *Vertical insulation* is continuous insulation that is applied directly to the slab exterior, extending downward from the top of the slab for the distance specified. *Fully insulated slab* is continuous insulation that extends downward from the top to the slab and along the entire perimeter and completely covers the entire area under the slab.

Assumptions: Data of this table is taken from the ASHRAE/IESNA Standard 90.1-2004, Appendix A.

4.5 Miscellaneous Construction

Table 4.5.1 – Opaque Doors

Description		U-factor (Btu/ºF-ft²)
		A
Uninsulated single-layer metal *swinging doors* or *non-swinging doors*, including single-layer uninsulated access hatches and uninsulated smoke vents:	**1**	1.45
Uninsulated double-layer metal *swinging doors* or *non-swinging doors*, including double-layer uninsulated access hatches and uninsulated smoke vents:	**2**	0.70
Insulated metal *swinging doors*, including fire-rated *doors*, insulated access hatches, and insulated smoke vents:	**3**	0.50
Wood *doors*, minimum nominal thickness of 1-3/4 in. (44 mm), including panel *doors* with minimum panel thickness of 1-1/8 in. (28 mm), and solid core flush *doors*, and hollow core flush *doors*:	**4**	0.50
Any other wood *door*:	**5**	0.60
Unisulated single layer metal *roll up doors* including fire rated *door*	**6**	1.45
Insulated single layer metal *sectional doors,* minimum insulation nominal thickness of 1-3/8 inch; expanded polystyrene (R-4 per inch).	**7**	0.179
Source: ASHRAE 90.1-2004, Section A7.		

4.6 Modeling Constructions in the Nonresidential ACM

DOE-2.1e is the reference method for nonresidential compliance software. CALRES is the reference method for residential compliance software. These programs and other approved compliance software may require additional information on the physical properties of materials. With DOE-2, specifying the layers that make up the assembly and defining the fundamental thermal properties for each layer such as thickness, conductivity, density and specific heat may define construction assemblies. CALRES and its derivatives require density, conductivity and volumetric heat capacity and unit interior mass capacity (UIMC). These properties are related to each other so that if you know some of the properties you can calculate the others.

4.6.1 DOE-2 Material Codes

Notes to each of the tables in this joint appendix describe the layers that are used to determine the U-factors. The codes in parenthesis are a reference to the DOE-2 material codes used in the calculations. These codes along with other materials referenced in the notes are shown below. Some of the materials that are used in the standard construction assemblies are not listed as standard DOE-2 materials and in these cases, the "Code" column is shown as "Custom".

4.6.2 Framing/Insulation Layer

With the DOE-2 model, every layer is assumed to be homogeneous, while in reality this is not the case. Framed walls have a layer that includes the framing members with insulation placed between the members. With DOE-2, the layers specified in the footnotes shall be entered and the R-value of insulation/framing layer shall be back calculated to achieve the U-factor shown in the tables in this appendix. The insulation/framing layer shall be modeled with an R-value (no mass), as opposed to entering conductivity, specific heat, density and thickness for the framing layer.

4.6.3 Thermal Mass Properties

When U-factor, C-factor and HC are published, other thermal mass properties may be calculated using the rules described in Table 4.6.2.

4.6.4 Metal Buildings

Metal building walls and metal building roofs shall be modeled in the DOE-2 reference method as quick surfaces, e.g. thermal mass is not modeled. I these cases, no layers are specified, just the U-factor.

4.6.5 Slabs

For nonresidential buildings, slab edge conditions shall be modeled as 12 in. of concrete and 12 in. of earth, and a layer of insulation exterior to the earth that achieves the F-factors shown in Table 4.4.7 and Table 4.4.8.

Table 4.6.1~~6~~ – Physical Properties of Materials

Code	Description	R-value	Thickness	Conductivity	Density	Specific Heat
AR02	Asphalt Shingle & Siding	0.44			70.0	0.35
BP01	Building Paper, Permeable Felt	0.06				
PW03	Plywood 1/2 in.	0.63	0.0417	0.0667	34.0	0.29
GP01	Gypsum Board 1/2 in.	0.45	0.0417	0.0926	50.0	0.26
BR01	Built-up Roofing 3/8 in.	0.33	0.0313	0.0939	70.0	0.35
PW05	Plywood 3/4 in.	0.94	0.0625	0.0667	34.0	0.29
PW04	Plywood 5/8 in.	0.78	0.0521	0.0667	34.0	0.29
CP01	Carpet with Fibrous Pad	2.08				0.34
PB01	Particle Board Low Density 3/4 in.	1.39	0.0625	0.0450	75.0	0.31
SC01	Stucco 1 in.	0.20	0.0833	0.4167	116.0	0.20
WD05	Wood, Soft 4 in.	5.00	0.3333	0.0667	32.0	0.33
WD11	Wood, Hard 3/4 in.	0.68	0.0625	0.0916	45.0	0.30
-CC03	Heavy Wt. Dried Aggregate 4 in.	0.44	0.3333	0.7576	140.0	0.20
CC14	Heavy Wt. Undried Aggregate 4 in.	0.32	0.3333	1.0417	140.0	0.20
AC02	1/2 in. Acoustic Tile	1.26	0.0417	0.0330	18.0	0.32
AL33	Air Layer 4 in. or more, Horizontal Roof	0.92	1.0000	0.4167	120.0	0.20
CP01	Carpet with Fibrous Pad	2.08				0.34
Custom	Concrete	0.11			144.0	0.20
Custom	Light weigt CMU	0.35			105.0	0.20
Custom	Medium Weigt CMU	0.35			115.0	0.20
Custom	Normal Weigt CMU	0.35			125.0	0.20
Custom	Earth (Soil)	3.00	1.5000	0.5000	85.0	0.20
Custom	Logs 6 in.	7.50	0.5000	0.0667	32.0	0.33
Custom	Logs 8 in.	10.00	0.6667	0.0667	32.0	0.33
Custom	Logs 10 in.	12.49	0.8333	0.0667	32.0	0.33
Custom	Logs 12 in.	14.99	1.0000	0.0667	32.0	0.33
Custom	Logs 14 in.	17.49	1.1667	0.0667	32.0	0.33
Custom	Logs 16 in.	19.99	1.3333	0.0667	32.0	0.33
Custom	Earth 12 in.	2.00	1.0000	0.5000	85.0	0.20
Custom	Vented crawspace	6.00	NA	NA	NA	NA
Custom	7/8" layer of stucco of R-0.18	0.18	0.0729	0.4167	116.0	0.20
Custom	Straw bale	30.00				
Custom	Acoustic tile + Metal	0.50	0.0417	0.0330	18.0	0.32
Custom	OSB 7/16 in.	0.44	0.4375	0.0667	34.0	0.29

Table 4.6.2~~8~~ – Rules for Calculating Mass Thermal Properties From Published Values

Property	Units	Rule for Calculation
Heat Capacity (HC)	Btu/ºF-ft²	From Table 4.3.5, Table 4.3.6, or Table 4.3.7
U-factor	Btu/h-ºF-ft²	From Table 4.3.5, Table 4.3.6, or Table 4.14
C-factor	Btu/h-ºF-ft²	From Table 4.3.5, Table 4.3.6, or Table 4.3.7
Thickness (T)	Ft	From Table 4.3.5, Table 4.3.6, or Table 4.3.7
Specific Heat (SH)	Btu/ºF-lb	Assume that the specific heat of all concrete and masonry materials is 0.20 Btu/ºF-lb and that the specific heat of wood or straw (see Table 4.3.11 and Table 4.3.12) is 0.39 Btu/ºF-lb.
Weight (W)	lb/ft²	Divide the HC by the assumed specific heat. Wall weight is used with the low-rise residential standards to define a high mass wall.
Density (D)	lb/ft³	Multiply the weight (as calculated above) by the thickness (T)
Conductivity (C)	Btu/h-ºF-ft	Divide the published C-factor by the thickness (T). When only a U-factor is published, calculate the C-factor by assuming an exterior air film of 0.17 and an interior air film of 0.68.

Joint Appendix JA5 – 2008

Appendix JA5 – Technical Specifications for Programmable Communicating Thermostats

JA5.1 Purpose and Scope

This Appendix references the technical specifications for Programmable Communicating Thermostats (PCT). PCTs are required to comply with the requirements of Section 112(c) of the Standards. The technical specifications for PCTs are located at: http://drrc.lbl.gov/pct

(blank)

Joint Appendix JA6 – 2008

Appendix JA6 – Charge Indicator Display

JA6.1 Purpose and Scope

Reference JA6 specifies the required elements of a charge indicator light that signals when the refrigerant charge or metering device performance does not meet specifications.

The following sections document the instrumentation needed, the required instrumentation accuracy, the parameters measured, and the calculations required.

The reference method algorithms adjust (improve) the efficiency of split system air conditioners and heat pumps when a charge indicator light is installed. Table JA6-1 summarizes the algorithms that are affected by the charge indicator light.

Table JA6-1 – Summary

				Proposed Design	
Input to the Algorithms	Variables and Equation Reference	Description	Standard Design Value	Default Value	Procedure
Cooling System Refrigerant Charge and Metering	Fchg (Eq. R4-40 and R4-41)	Fchg takes on a value of 0.96 when the system has a charge indicator light meeting the specifications in JA6 or when the charge metering device have been tested and verified according to ACM RD-2008. Otherwise, Fchg has a value of 0.90.	Split systems are assumed to have refrigerant charge testing or a charge indicator light, when required by Package D.	No refrigerant charge testing and no charge indicator light.	JA6.2

JA6.2 Standard for a Charge Indicator Light

This section specifies the Standard for a charge indicator light.

JA6.2.1 Instrumentation Specifications

Instrumentation for the procedures described in this section shall conform to the following specifications:

JA6.2.1.1 Temperature Sensors

The temperature sensors shall have: accuracy of: ± 1.5º F.

JA6.2.1.2 Refrigerant Pressure Sensors (if used)

Refrigerant pressure sensors, if used, shall have an accuracy of plus or minus 3%.

JA6.2.1.3 Parameters Measured

The following parameters shall be measured:

1. Suction line temperature
2. Liquid line temperature
3. Evaporator saturation temperature or low side refrigerant pressure
4. Condenser saturation temperature or high side refrigerant pressure
5. Return air wet bulb temperature or humidity

6. Return air dry bulb temperature

7. Condenser air entering dry bulb temperature

8. Supply air dry bulb temperature

JA6.2.2 Charge Error Indication

The charge error indicator light shall:

1. be clearly visible to occupants of the home in normal operation.

2. be on or within one foot of (one of) the thermostat(s) controlling the air conditioner.

3. illuminate for a period of at least 7 days when any of the following occur;

a) the air conditioner runs for 15 minutes, the condenser air entering temperature exceeds 65ºF, has a fixed metering device, and has a superheat more than 5ºF different from the target superheat listed in Reference Residential Appendix RA3 Table RA3.2-2.

b) the air conditioner runs for 15 minutes, has a TXV or EXV, and has a subcooling more than 3ºF different from the target subcooling listed by the manufacturer.

c) the air conditioner runs for 15 minutes, has a TXV or EXV, and has a superheat outside the range specified by the manufacturer (or outside 4ºF to 25ºF if there is no manufacturer's specification).

d) the air conditioner runs for 15 minutes, the condenser air entering temperature exceeds 65ºF, and has a temperature split more than 5ºF different from the target temperature split listed in Reference Residential Appendix RA3 Table RA3.2-3.

JA6.2.3 Additional Error Indication

The charge error indicator light may be set to tighter specifications than those in JA6.2.2. The light may also be used to signal other faults as long as these additional functions do not detract from the indications in JA6.2.2.

Joint Appendix JA7 – 2008

Appendix JA7 – Installation Procedures for Medium-Density, Closed-Cell and Low Density, Open-Cell Spray Polyurethane Foam (SPF)

JA7.1 Purpose and Scope

Joint Appendix 7 details a procedure for quality installation of Medium-Density, Closed-Cell Spray and Low-Density, Open-Cell Polyurethane Foam (SPF) insulation and verification that the procedure has been followed in the installation. All applications of SPF must follow the following procedure. A compliance credit is offered when this procedure is followed for SPF application in low rise-residential buildings and verified by a qualified HERS rater. The procedure and credit applies to wood or metal framed construction with wall stud cavities, ceilings, and/or roof assemblies insulated with SPF insulation. High-rise residential, Hotel/Motel, and Nonresidential Buildings are required to follow the same procedures if SPF Insulation is installed however no compliance credit is available.

A copy of the required SPF Insulation Certificate containing the details for each installation job including a sample label is included at the end of the Appendix. Instructions regarding completion of the form CF-6R are also included.

JA7.2 Terminology

Air Barrier	An air barrier is needed in all thermal envelope assemblies to prevent air movement. SPF insulation is designed to stop air movement and an additional air barrier is not required in areas where SPF insulation is applied.
Air-tight	Thermal envelope assemblies (such as wall assemblies) shall be built to minimize air movement which can move unwanted heat and moisture through or into the assembly. SPF insulation seals construction gaps. For these procedures air-tight shall be defined as an assembly (1) to which SPF has been applied and (2) all openings greater than 1/8 inch are caulked or sealed with foam.
Closed-Cell SPF	See Medium Density SPF
Draft Stops	Draft stops are installed to prevent air movement between wall cavities, other interstitial cavities and the attic. SPF insulation usually provides sufficient draft stops, however supplemental draft stops may be constructed of dimensional lumber blocking, drywall or plywood. Draft stops become part of the attic air barrier and shall be air-tight. Fire blocks constructed of porous insulation materials cannot serve as draft stops since they are not air-tight.
Gaps	A gap is an uninsulated area at the edge of an insulated area or penetrating the insulation. This can occur where insufficient SPF has been applied or SPF insulation has not properly adhered to a stud face, rafter face or other construction detail. Gaps in insulation are avoidable and are not permitted.
Hard Covers	Hard covers shall be installed above areas where there is a drop ceiling. For example, a home with 10 ft ceilings may have an entry closet with a ceiling lowered to 8 ft. A hard cover (usually a piece of plywood) is installed at the 10 ft. level above the entry closet. Hard covers become part of the ceiling air barrier and shall be air-tight.
Low Density SPF	A spray polyurethane foam (SPF) with a nominal density of 0.5 pounds per cubic foot or

less.

Medium Density SPF	A structural spray polyurethane foam (SPF) having a nominal density of 2.0 ± 0.5 pounds per cubic foot.
Minimally Expansive Foam	A one- or two-component polyurethane foam system typically in a can formulated to fill construction gaps and crevasses without distorting adjacent framing. Minimally expansive foam typically expands only 2 to 5 times its dispensed volume.
Net Free-Area	The net free-area of a vent cover is equal to the total vent opening less the interference to air flow caused by the screen or louver. Screened or louvered vent opening covers are typically marked by the manufacturer with the "net free-area." For example a 22.5 in. by 3.5 in. eave vent screen with a total area of 78.75 square inches may have a net free-area of only 45 square inches.
Nominal Thickness	Medium-Density SPF typically exhibits surface undulations due to the insulation's expansion in the cavity. SPF thicknesses will, therefore, vary from point to point and from side to side of construction cavities (typically thickness will be greater at the perimeter of construction cavities where the SPF is filled onto framing members and thinner toward the center of the cavity). Since the R-value of the SPF insulation is determined by the thickness, it is important that the average thickness of the SPF be sufficient to meet the requirements of the project. However, the minimum thickness at any given point should be no more than ½ inch less than the required thickness. Low-Density also exhibits surface undulations due to the insulation's expansion into the cavity. However, when low density SPF is applied it must fill the entire cavity of 2 by 4 and 2 by 6 inch cavities. The surface undulations shall be shaved off to provide a flat surface for interior wall covering such as sheetrock. No thickness measurement is required since the insulation thickness is equal to the framing thickness.
Spray Polyurethane Foam (SPF)	A foamed plastic material formed by the reaction of an isocyanurate and a polyol that employs a blowing agent to develop a cellular structure. SPF may be a two-component reactive system mixed at a spray gun or a single-component system that cures by exposure to humidity. SPF can be formulated to have specific physical properties (such as density, compressive strength, closed cell content, and R-value) appropriate for the application requirements. Common uses of SPF include insulation, air barrier and roofing membrane. Vapor barrier
Voids	A volume within an enclosed building assembly created when the assembly has been insulated by partial filling with medium-density SPF. The partial fill results in an air space (void) between the SPF surface and the assembly cover or sheathing. Voids are permitted under this Procedure. (Contrast with the definition for Gaps.)

JA7.3 General Requirements

- SPF insulation shall be applied by skilled SPF applicators trained and experienced in the use and maintenance of high-pressure, plural-component equipment.
- SPF insulation shall be installed per the manufacturer's specifications, recommendations and temperature/humidity limitations.
- SPF applicators shall be certified by the SPF insulation manufacturer for the application of SPF residential insulation systems.

- Substrates to which SPF insulation is applied shall be secure and free of surface moisture, frost, grease, oils, dirt, dust or other contaminants that would adversely affect SPF adhesion.
- SPF insulation shall be separated from occupied spaces by an approved thermal barrier in accordance with 2006 IRC Section R314.4.
- Drums or other containers of the polyol blend (B-Component, Resin Component or R-Component) shall include a green-colored label or tag which indicates the manufacturer, SPF tested density, and type (e.g., "Medium-Density, Closed-Cell Structural SPF Insulation") and R-value per inch for that density. This label will be detachable so that it may be included with the HERS rater's report.
- Medium-Density SPF insulation shall be installed in a manner such that the average thickness of the applied SPF will achieve the specified R-value of the assembly. Nominal thickness of the SPF insulation shall be such that (1) the average thickness is equal to or greater than that required to meet the design R-value of assembly and (2) the minimum thickness shall be no more than ½ inch less than the required thickness for the R-value.
  - Low Density SPF shall be installed the full depth of the framed cavity. Excess insulation shall be scraped off to provide a smooth surface for application of interior sheathing.
  - Low-Density SPF shall fill the framing cavity and will be assigned an equivalent U-value to the CEC standard R-13 wall in 2 by 4 inch framing and a U-value equivalent to R-19 when installed in a 2 by 6 inch cavity.
  - Low-Density SPF insulation is open cell which allows it to absorb water. Therefore a vapor barrier shall be applied when installing Low Dens0ity SPF.
- The installer of Medium-Density SPF shall certify on the appropriate Installation Certificates the R-value per inch and that the manufacturer's thickness to achieve the required R-value has been met.
- The HERS rater shall verify that the manufacturer's nominal insulation thickness has been installed and recorded on the ~~CF-4R.~~Certificate of Field Verification.

JA7.4 Raised Floors and Floors Over Garages

JA7.4.1 Raised Floors

SPF insulation shall be spray-applied to fully adhere to the substrate—usually the subfloor.

JA7.4.2 Floors Over Garages

- There are two ways to insulate the floor over the garage:

Two Story Homes with No Conditioned Space over Garage

Air barrier and insulation is required at the band joist where the garage/attic transitions to conditioned space. Spray foam is allowed as the air barrier al long as there are no voids into the conditioned space. (See Figure 1 and 2)

Two Story Homes with Conditioned Space over Garage

There are two ways to insulate the floor over the garage:

1. Insulate the exterior rim joists and ceiling of the garage with SPF insulation. The insulation on the rim joists must touch the subfloor. In this scenario the area between the subfloor and the ceiling of the garage is a conditioned space. (See Figure 3)

2. Insulate the subfloor of the second story over the garage. When this method is used the rim joist between the garage and the conditioned space (house) must be air tight and insulated. The rim joist must be sprayed with SPF insulation and fully air tight. The area between the subfloor and garage ceiling is conditioned space in this application. (See Figure 4)

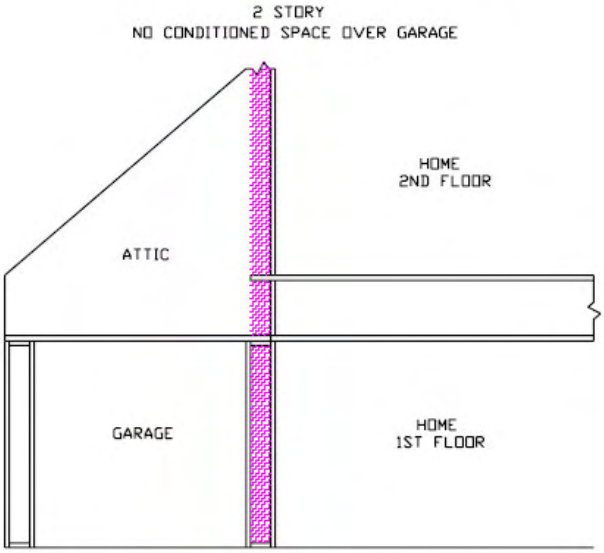

FIGURE 1

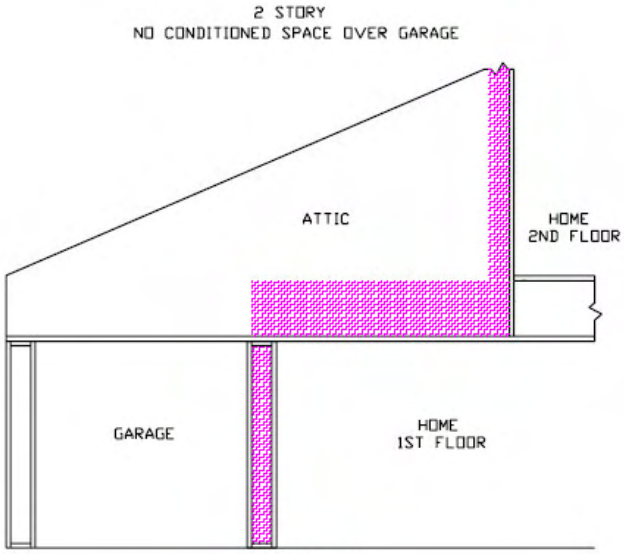

FIGURE 2

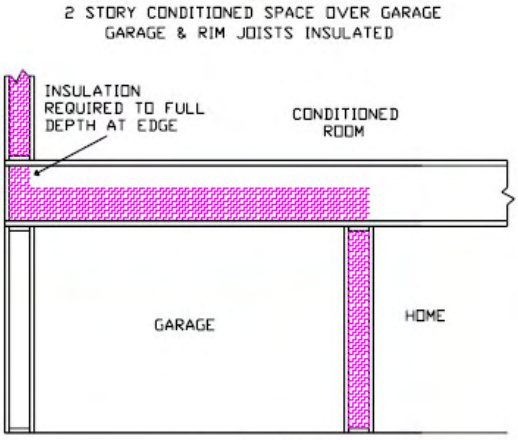

FIGURE 3

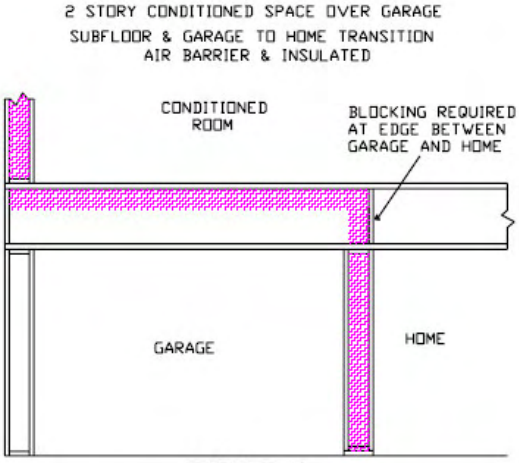

FIGURE 4

~~1.Insulate the floor over the garage by spraying SPF insulation to fully adhere to subfloor. . When this method is used the wall between the garage and the conditioned space (house) must be extended up to the subfloor. This extension must be sprayed with SPF insulation and fully air tight. When the subfloor is sprayed the area between the subfloor and garage ceiling is a conditioned space. For this reason the garage must be fully separated from the conditioned space of the floor ceiling of the house which is a conditioned space.~~

~~2.Insulate the rim joists and ceiling of the garage with SPF insulation. The insulation on the rim joists must touch the subfloor. In this scenario the area between the subfloor and the ceiling of the garage is a conditioned space.~~

JA7.5 Wall Insulation

JA7.5.1 SPF Application

- In wall stud cavities, SPF shall be applied to provide a substantially air-tight envelope to the outdoors, attic, garage and crawl space. Special attention shall be paid to plumbing and wiring penetrations through the top plates, electrical boxes that penetrate the sheathing, and the sheathing seal to the bottom plate.
- Installation shall uniformly cover the cavity side-to-side and top-to-bottom. An air space may be left between the surface of the Medium-Density SPF insulation and the interior sheathing/drywall provided the appropriate thickness of SPF has been applied to achieve the specified R-value. Low-Density SPF insulation must fill the framed wall cavity.

JA7.5.2 Narrow-Framed Cavities

- Non-standard width cavities shall be filled with SPF insulation at a depth consistent with the SPF thickness required to achieve the specified R-value. Low density SPF shall fill the cavity. Overfilling is permitted provided any excess which would interfere with drywall or sheathing installation is trimmed or removed.
- Narrow spaces (two inches or less) at windows and door jambs shall be filled with minimally expansive foam.
- Narrow spaces (two inches or less) at corners or other non-opening details shall be filled with SPF or minimally expansive foam.

JA7.5.3 Special Situations

JA7.5.4 Installations Prior to Exterior Sheathing or Lath

- Hard to access wall stud cavities such as corner channels, wall intersections, and behind tub/shower enclosures shall be insulated to the proper R-value. This may have to be done prior to the installation of the tub/shower or the exterior sheathing or stucco lath.

JA7.5.5 Obstructions / Wall Penetrations

- SPF insulation shall be spray-applied to fully adhere and seal around wiring and plumbing.
- SPF insulation shall be placed spray-applied to fully adhere and seal between the sheathing and the rear of electrical boxes and phone boxes.
- In cold climates, where water pipes may freeze (Climate Zones 14 and 16) pipes shall have at least two-thirds of the insulation between the water pipe and the outside. If the pipe is near the outside, as much insulation as possible shall be placed between the pipe and the outside and no insulation (minimal amounts of SPF overspray are acceptable) shall be allowed between the pipe and the interior wall.

JA7.5.6 Rim Joists

- All rim-joists shall be insulated to the same R-Value as the adjacent walls.
- The insulation shall be installed without gaps.

JA7.5.7 Kneewalls and Skylight Shafts

- All kneewalls and skylight shafts shall be insulated to a minimum of R-19 or a higher level as specified in the compliance documentation.
- The insulation shall be installed without gaps.

- For steel-framed kneewalls and skylight shafts, external surfaces of steel framing members shall be covered with SPF or rigid foam boardstock unless otherwise specified on the CF-1R using correct U-factors from Joint Appendix IV, Table IV-11R (or U-factors approved by the CEC Executive Director).
- The interior side of the SPF insulation is not required to be in contact with the drywall or other wall finish when the SPF is sprayed onto a backing board from the inside of the building and the top, bottom and sides of each frame assembly is sealed with the SPF. Since Low-Density Insulation shall fill the cavity it shall be in contact with the interior drywall or other finish.
- The SPF insulation shall be fully adhered and self-supporting so that it will remain in place.

JA7.5.8 HVAC/Plumbing Closet

- Walls of interior closets for HVAC and/or water heating equipment that require combustion air venting, shall be insulated to the same R-value as the exterior walls.

JA7.6 Ceiling and Roof Insulation

JA7.6.1 General Requirements

- SPF insulation shall be spray-applied to fully adhere to the substrate (roof deck or ceiling).
- SPF insulation shall be spray-applied to fully adhere to the joist and other framing faces to form a complete air seal within the construction cavity.
- SPF insulation shall be installed in a continuous and fully adhered manner to form an air barrier.
- SPF insulation shall be spray-applied to fully adhere to and seal around wiring and plumbing.
- Hard covers or draft stops shall be placed over all drop ceiling areas and interior wall cavities to keep insulation in place and stop air movement. If hard covers or draft stops are missing or incomplete, they shall be completed before insulation is installed.
- In vented attics, required eave ventilation shall not be obstructed; the net free-ventilation area of the eave vent shall be maintained. (For unvented, conditioned attics refer to IRC 806 Section.6.1.2.4.)
- SPF insulation shall not be applied directly to recessed lighting fixtures. Recessed lighting fixtures must be either insulated by methods other than SPF (such as mineral fiber) or enclosed in a box fabricated from ½-inch plywood, 18 gauge. sheet metal, 1/4-inch hard board or drywall. The exterior of the box may then be insulated with SPF. If the fixtures are not rated for insulation contact (IC) and air tight, the fixtures shall either be replaced or eliminated.
- All recessed light fixtures that penetrate the ceiling shall be IC and air tight (AT) rated and shall be sealed with a gasket or caulk between the housing and the ceiling.

JA7.6.2 Rafter Ceilings

- SPF insulation shall be kept away from combustion appliance flues in accordance with flue manufacturers' installation instructions or labels on the flue.

* Note. An air space shall be maintained between the insulation and roof sheathing if required by California Building Code section 1505.3. Verify that the building official in your area permits SPF directly applied to the underside of the roof since this construction results in no ventilation layer.

JA7.6.3 HVAC Platform

- In vented attics, a minimum of 3 inches of SPF insulation shall be placed below any plywood platform or cat-walks for HVAC equipment and access to assure that the overall assembly meets the required values listed in the Compliance Documentation.
- SPF insulation shall be installed in a continuous and fully adhered manner to form an air barrier.

JA7.6.4 Attic Access

- Apply a minimum of 3 inches of SPF insulation to the access door or permanently attach rigid foam with adhesive or mechanical fastener. The compliance requirements shall be met with this insulation.

JA7.6.5 Unvented-Conditioned Attics and Cathedral Ceilings

- Unvented-conditioned attics and cathedral ceilings are permitted when consistent with the provisions of 2006 IRC Section R806.
- In unvented-conditioned attics where entry is made for the service of utilities, SPF applied in direct contact with the underside of the roof deck will be protected from ignition in accordance with 2006 IRC Section R314.5.3.
- In cathedral ceilings where restricted spaces do not allow entry, SPF does not require protection from ignition.

JA7.7 Materials

- Materials shall comply with Uniform Building Code (including, but not limited to, 1997 UBC Chapter 26) and installed to meet all applicable fire codes.
- Materials shall meet California Quality Standards for Insulating Material, Title 24, Chapter 4, Article 3, listed in the California Department of Consumer Affairs Consumer Guide and Directory of Certified Insulating Materials.
- Materials shall comply with flame spread rating and smoke density requirements of Section 2602 of the Title 24, Part 2.
- Materials shall be installed according to manufacturer specifications and instructions.

JA7.8 Equipment

Probes for Medium Density SPF: Insulation thickness measurements shall be accurate to within ± 1/8 inch. Low-Density SPF does not require probes. Visual inspection to verify that the cavity is full is sufficient.

JA7.9 R-Value and U-Value Specifications

Insulation values shall be based on the following.

For Medium Density foam all the total R-value shall be calculated based on the nominal thickness of the insulation times an R-value of 5.8 per inch.. Based on this assumption for Medium Density foams the overall assembly U-value shall be determined by selecting the assembly from Joint Appendix 4 tables that matches the assembly type and framing configuration. The total R-value of the insulation in the assembly selected from Joint Appendix 4 must be less than or equal to the R-value determined for the spray foam.

Low density foam R-values shall be based on an assumption that all foams have an R-value of 3.6 per inch. The overall U-value shall be determined by selecting the assembly from Joint Appendix 4 tables that matches the assembly type and framing configuration. The cavities must be filled and the R-value shall be assumed to be equal to batt insulation assemblies.

See the Certificate of Compliance for minimum R-value requirements.

JA7.10 Certificates

An Insulation Certificate (SPF IC) signed by the SPF applicator shall be provided that states that the installation is consistent with the plans and specifications for which the building permit was issued. The certificate shall also state the installing company name, insulation manufacturer's name and material identification, the labeled R-value per the manufacturer's Insulation Fact Sheet (consistent with FTC requirements), the installed nominal thickness as specified in Section 7.3, and the installed R-value for Medium-Density SPF. The SPF applicator shall also complete form CF-6R and attach a drum label/tag or a manufacturer's coverage chart for every insulation material used.

JA7.11 Certificates and Availability

The SPF Insulation Certificate (SPFIC) with the drum or container label attached and the CF-6R Installation Certificate, signed by the SPF applicator, shall be available on the building site for each of the HERS rater's verification inspections. Note: The HERS rater cannot verify compliance credit without these completed forms.

SPF INSULATION CERTIFICATE

In order to comply with the State of California building code, this Certificate along with the CF-6R Installation Certificate must be filled out by the SPF Applicator and posted on the jobsite near the electrical panel for the HERS rater. The HERS rater cannot verify insulation compliance without the information provided on this Certificate. DO NOT REMOVE from jobsite until Certificate of Occupancy has been issued.

Jobsite Location _____ Building Permit No. _____

Builder/General Contractor _____

SPF Application Company _____ Phone _____

Name of person filling out this form (please print) _____

Date(s) of SPF application _____

SPF insulation manufacturer (Name and primary location) _____

Product(s) installed _____

Building Assembly Insulated	**Nominal SPF Thickness (inches)**	**R-Value per inch**	**Average R-Value**	**Low Density SPF Framing Cavity is filled (x)**
Floor				
Walls				
Attic Floor				
Roof (unvented conditioned attics)				
Crawlspace Perimeter				
Basement Walls				

Declaration: To the best of my knowledge, the above information accurately represents the SPF insulation installed in the above referenced project and that this SPF insulation was installed in a workmanlike manner consistent with the plans and specifications for which the building permit was issued.

Signed_____

SPF Applicator Authorized Representative

Date _____

ATTACH SPF DRUM OR CONTAINER LABEL / TAG HERE

Joint Appendix JA8 – 2008

Appendix JA8 – Testing of Light Emitting Diode Lighting Systems

JA8.1 Scope

The testing methods in this appendix shall be used to determine wattage and efficacy for all light emitting diode (LED) lighting systems, also known as solid state lighting (SSL). Each LED lighting system tested shall produce the same quantity and quality of light. LED lighting systems producing different Correlated Color Termperature (CCT), Color Rendering Index (CRI), total flux (per linear foot) or other quantitative and qualitative differences in light shall be separately tested.

The power of luminaires and integral trims containing only LED lighting systems shall be determined in accordance with JA 8.1.2. For luminaires containing LED lighting systems in addition to one or more other lighting technologies, the power of the LED lighting system shall be determined in accordance with JA 8.1.2, and the power of non-LED lighting components shall be determined in accordance with Title 24, Part 6, Section 130(d)(1, 2, 3, 4, or 6) as appropriate.

The efficacy of luminaires and integral trims containing only LED lighting systems shall be determined in accordance with JA 8.1.3. For luminaires containing LED lighting systems in addition to one or more other lighting technologies, the efficacy of the LED lighting system shall be determined in accordance with JA 8.1.3, and the efficacy of non-LED lighting components shall be determined in accordance with Title 24, Part 6, Section 150(k)(1 and 2).

JA8.2 Determining the Wattage of Light Emitting Diode (LED) lighting Systems

The wattage of LED lighting system shall be determined as follows, or by a method approved by the Executive Director:

a. The wattage shall be the maximum rated input wattage of the LED lighting system, including power used by fans, transformers and power supply devices, and

b. The wattage shall be listed on a permanent, pre-printed, factory-installed label on the luminaire housing, or on the integral LED trim when applicable, and

c. The LED lighting system shall be tested in a Underwriters Laboratory (UL) 1598 testing apparatus in a National Voluntary Laboratory Accreditation Program (NVLAP) or International Standards Organization (ISO) 17025 accredited lab as specified by UL; and

d. The LED lighting system shall be tested according to all of the following conditions:

   1. The ambient temperature in which measurements are being taken shall be maintained at 25°C ± 1°C.

   2. The AC power supply shall have a frequency of 60 Hz, and a sinusoidal voltage wave shape.

   3. The voltage of an AC or DC power supply shall be regulated to within ±0.2 percent.

   4. The LED lighting system under test shall be burned-in for 100 hours before testing.

   5. The LED lighting system under test shall be operated and stabilized before testing at ambient temperature and burning position as specified until the LED product reaches thermal equilibrium. Stability is reached when the variation of light output remains within 1% for a period of 10 minutes at constant ambient temperature and constant electrical input.

6. The LED lighting system under test shall be measured at the burning position in which it will be installed in the luminaire.
7. The LED lighting system under test shall be operated at the rated voltage (AC or DC) according to the specification of the LED lighting system for its normal use.
8. Testing using pulsed operation of the LED lighting system shall not be acceptable

JA8.3 Determining the Efficacy of Light Emitting Diode (LED) Lighting Systems

The efficacy of LED lighting systems shall be determined as follows, or by a method approved by the Executive Director:

a. Luminous flux shall be measured after the system has stabilized in accordance with JA 8.1.2(d)5; and

b. The total luminous flux of the LED lighting system under test shall be measured with an integrating sphere photometer or a goniophotometer by a lab accredited by Underwriters Laboratory (UL) under their client test data program; and

c. The total luminous flux of the LED lighting system shall be permanently pre-printed on the LED circuit board, on a permanent pre-printed factory installed label on an integral LED trim or luminaire housing, or published in manufacturer's catalogs based on independent testing lab reports; and

d. The luminous efficacy (lumens per watt) of the LED lighting system shall be the quotient of measured total luminous flux (lumens) and the measured electrical input power (watts) of the LED lighting system under test when tested in accordance with JA8(a); and

e. The LED lighting system under test shall be equal to the LED lighting system in the installed luminaire.

Residential Appendix RA1 – 2008

Appendix RA1 – HVAC Sizing

RA1.1 Purpose and Scope

~~ACM~~ RA1~~F-2008~~5 is a procedure for calculating the cooling load in low-rise residential buildings, the ~~the~~ needed cooling capacity at ARI rating conditions (Section RA1-.~~F~~2), and ~~for determining~~ the maximum rated total cooling capacity for credit in ~~ACM~~compliance software calculations (Section RA1-.~~F~~3). Section RA1-.~~F~~4 has a procedure for determining compliance for oversized equipment by showing that the peak power is equal to or less than equipment that minimally meet the requirements of this section.

RA1~~F~~-.~~.~~2 Procedure for Calculating ~~Design~~ Rated Total Cooling Capacity

The following rules apply when calculating the ~~design~~ rated total cooling capacity:

RA1.2.1 Methodology

The methodologies, computer programs, inputs, and assumptions approved by the commission shall be used.

RA1.2.2 Sensible Cooling Loads

Except as specified in this section, calculations will be done in accordance with the method described in Chapter 28~~89~~, Residential Cooling and Heating Load Calculations, 2001 ASHRAE Fundamentals Handbook. Interpolation shall be used with tables in Chapter 28. The methods in Chapter 29 may not be used under this procedure.

RA1.2.3 Indoor Design Conditions

The indoor cooling design temperature shall be 75°F. An indoor design temperature swing of 3°F shall be used.

RA1.2.4 Outdoor Design Conditions

Outdoor design conditions shall be selected from the 1.0 Percent Cooling Dry Bulb and Mean Coincident Wet Bulb values in Reference Joint Appendix JA~~II~~ 2-3~~REF~~.

RA1.2.5 Block Loads

The design sensible cooling load~~capacity used for calculating the maximum allowable cooling capacity~~ is based on the block (peak) load either for

1. The whole building; or
2. For each zone within a building that is served by its own cooling system; or
3. For each dwelling unit within a building that is served by its own cooling system.

Room-by-room loads are not allowed for calculating the design cooling capacity.

RA1.2.6 Table Selection

Note: The following table numbers refer to the ASHRAE Fundamentals 2001. In Table 1 of ASHRAE Handbook of Fundamentals 2001, for any temperature equal to or exceeding the 105 degree design temperature, the daily range shall be set to high.

Table~~s~~ 2 (cooling load temperature differences) and Table 4 (glass load factors) shall be used for:

1. Buildings with more than one dwelling unit using whole building block loads; or
2. Buildings or zones with either east or west exposed walls but not both east and west exposed walls.

Otherwise, Table~~s~~ 1 (cooling load temperature differences) and Table 3 (glass load factors) shall be used.

~~Note: The table numbers refer to the ASHRAE Fundamentals 2001.~~

RA1.2.7 U-factors

U-factors for all opaque surfaces and fenestration products shall be consistent with the methods described in Section ~~4.2 and Section 4.3~~3 of the Residential ACM Manual. The effects of radiant barriers or cool roofs shall be included if these features are in the proposed building.

RA1.2.8 Solar Heat Gain Coefficients

Solar heat gain coefficients (SHGC) shall be equal to the $SHGC_{closed}$ values described in Section ~~4.3.4~~3.7.7 of the Residential ACM Manual.

RA1.2.9 Glass Load Factors

Glass load factors (GLFs) shall be calculated using the equation in the footnotes of Tables 3 and 4 in Chapter 28 of the 2001 ASHRAE Fundamentals Handbook~~, Chapter 28~~ using the columns for "Regular Double Glass" and the rows for "Draperies, venetian blinds, etc". The table values used in the equation shall be U_t = 0.55 and SC_t = 0.45. The shading coefficient for the alternate value shall be SC_a = SHGC /~~x~~ 0.87 where the SHGC value is described above. The GLF values shall also be adjusted for latitude as described in the footnotes.

~~Note: The table numbers refer to the ASHRAE Fundamentals 2001.~~

RA1.2.10 Infiltration

The air flow (CFM) due to infiltration and mechanical ventilation shall be calculated with the effective leakage area method as documented in Section ~~4.5.1~~3.3.3 of the Residential ACM Manual using the outdoor design temperature minus the indoor design temperature as the temperature difference and a 7.5 mph wind speed.

RA1.2.11 Internal Gain

Occupancy shall be assumed to be two persons for the first bedroom and one person for each additional bedroom per dwelling unit. Each person shall be assigned a sensible heat gain of 230 Btu/hr. Appliance loads shall be 1200 Btu/hr for multifamily buildings with common floors and ceilings. Otherwise the appliance load is 1600 Btu/hr.

RA1.2.12 Cooling Duct Efficiency

The cooling duct efficiency shall be calculated using the seasonal approach as documented in Residential ACM Manual Section ~~4.8.8~~3.12.7.

RA1.2.13 Latent Factor

The latent factor shall be 1.0. A latent factor of 1.0 results in a design sensible cooling load calculation.

RA1.2.14 ~~Total~~ Design Sensible Cooling Load

The ~~total~~ design sensible cooling load is calculated in accordance with Table 9 of Chapter 28 of the ASHRAE Handbook, Fundamentals Volume, 2001, using the values specified in this section.

RA1.2.15 Design Sensible Equipment Cooling Load

The design sensible equipment cooling load is equal to the ~~total~~ design sensible cooling load divided by the cooling duct efficiency.

RA1.2.16 ~~Design~~ Rated Total Cooling Capacity

The ~~design~~ rated total cooling capacity calculation adjusts the ~~sensible design~~ design sensible equipment cooling load to ~~estimate~~ the needed total ~~the rated~~ cooling capacity at ARI rating standard conditions as posted in the ARI directory at www.aridirectory.org ~~needed~~ as follows:

Equation RA1~~F~~-1

Rated Total Cooling Capacity (Btu/hr) =
Design Sensible Equipment Cooling Load (Btu/hr) x (1.0209 + 0.0043 x Outdoor Cooling Design Temperature (°F))

RA1.3 Procedure for Calculating Maximum Rated Total Cooling Capacity for ~~ACM~~Compliance Credit

The following rules apply when calculating the maximum rated total cooling capacity for ~~ACM~~compliance credit:

~~RF.3.1 Design Cooling Capacity~~

~~The design cooling capacity shall be calculated in accordance with the procedure described in RF2.~~

RA1.3.1 Maximum Rated Total Cooling Capacity for ~~ACM~~Compliance Credit

For buildings with a single cooling system or for buildings where the design cooling capacity has been calculated separately for each cooling system, the maximum rated total cooling capacity for ~~ACM~~compliance credit for each cooling system shall be:

Table RA1~~F~~-1 – Maximum Cooling Capacity for ~~ACM~~Compliance Credit

~~Design~~ Rated Total Cooling Capacity (Btu/hr)	Maximum Rated Total Cooling Capacity for ~~ACM~~Compliance Credit (Btu/hr)
< 48000	~~D~~Rated Total ~~esign~~ Cooling Capacity + 6000
48000 - 60000	~~Design~~ Rated Total Cooling Capacity + 12000
>60000	~~Design~~ Rated Total Cooling Capacity + 30000

For buildings with more than one cooling system where the design cooling capacity has been calculated for the entire building, the maximum cooling capacity for ~~ACM~~compliance credit for the entire building shall be:

Equation RA1~~F~~-2

Maximum Rated Total Cooling Capacity for Compliance Credit (Btu/hr) =
Rated Total Cooling Capacity (Btu/hr) + (6000 (Btu/hr) x Number of Cooling Systems)

RA1.3.2 Multiple Orientations

For buildings demonstrating compliance using the multiple orientation alternative of Section 151(c) of the Standards, the maximum rated total cooling capacity for ~~ACM~~compliance credit is the highest, considering north, northeast, east, southeast, south, southwest, west and northwest orientations. For buildings with more than one cooling system, the orientation used for determining the maximum rated total cooling capacity for ~~ACM~~compliance credit shall be permitted to be different for each zone.

RA1~~F.~~.4 Procedure for Determining Electrical Input Exception for Maximum Rated Total Cooling Capacity for ~~ACM~~Compliance Software Credit

The installed rated total cooling capacity shall be permitted to exceed the maximum rated total cooling capacity for ~~ACM~~compliance credit if the electrical input of the oversized cooling system is less than or equal to the electrical input of a standard cooling system using the following rules:

~~RF.4.1 Design Cooling Capacity~~

~~The design cooling capacity shall be calculated for the Proposed Design in accordance with the procedure described in RF2.~~

A1.-4.21 Standard Total Electrical Input

The standard electrical input is calculated as follows:

Equation RA1-3

Standard Rated Electrical Input (W) =
Maximum Rated Total Cooling Capacity (Btu/hr) / Default EER (Btu/Watthr)

~~Equation RF-3~~

Where Default EER = 10 Btu/Watt-hr

~~WhereFanW/Btu = FamW/(ARI) Rated Nominal Tons * 12000)~~

RA1.4.2 Proposed Electrical Input

If the proposed Air Conditioner is listed in the ARI database with a specified furnace or air handler and that furnace or air handler is to be installed, the ~~The~~ proposed electrical input (W) for the installed cooling system is calculated as follows:

Equation RA1F-4

Proposed Electrical Input (W) =
Rated Total Cooling Capacity (Btu/hr) / EER (Btu/Watthr)

Where the Rated Total Cooling Capacity is posted as "Cooling Capacity" and the EER is posted as "EER" in the in the ARI directory at www.aridirectory.org ~~Where "Electrical Input" is as published in the Directories of Certified Appliances maintained by the California Energy Commission in accordance with the requirements of the Appliance Standards.~~

~~The proposed electrical input (W) for the installed cooling system is published as the "Electrical Input" in the Directories of Certified Appliances maintained by the California Energy Commission in accordance with the requirements of the Appliance Standards.~~

If the proposed Air Conditioner is listed in the ARI database without a furnace or air handler, the proposed electrical input is either:

Equation RA1-5

Proposed Electrical Input (W) =
Rated Total Cooling Capacity (Btu/hr) /EER (Btu/Whr)
+ Rated Total Cooling Capacity (Btu/hr) x .0048 (Whr/Btu)

or

Equation RA1-6

Proposed Electrical Input (W) =
Rated Total Cooling Capacity (Btu/hr) /EER (Btu/Whr)
- Rated Total Cooling Capacity (Btu/hr) x .0122 (Whr/Btu)
+ The measured fan power (W)

-where the measured fan power is determined at an airflow equal to or greater than 350 CFM per ton using the procedure described in ~~RA6-2008~~RA3.3 of the *Residential Appendices*.

Where the Rated Total Cooling Capacity is posted as "Cooling Capacity" and the EER is posted as "EER" in the ARI directory at www.aridirectory.org

~~RF.4.4 Proposed Fan Power~~

~~The proposed fan power (W) of the installed cooling system is equal to either:~~

~~1.0.017 (W/Btu/hr) x Design Cooling Capacity (Btu/hr); or~~

~~2.The measured fan power (W) where the measured fan power is determined using the procedure described in ACM RE-2008~~5 ~~of the *Residential ACM Manual*.~~

~~RF.4.5 Proposed Total Electrical Input~~

~~The proposed electrical input is equal to:~~

~~Equation RA1F-5~~

$$\text{Proposed Total Electrical Input (W)} = \text{Proposed Electrical Input (W)} + \text{Proposed Fan Power (W)}$$

For buildings with more than one cooling system, the proposed ~~total electrical power~~electrical input shall be the sum of the values for each system. If the proposed total electrical input is less than or equal to the standard total electrical input, then the installed cooling capacity may exceed the allowable cooling capacity for ~~ACM~~compliance -credit.

Residential Appendix RA2 – 2008

Appendix RA2 – Residential HERS Documentation and Enforcement Procedures

RA2.1 California Home Energy Rating Systems

Compliance credit for ~~particular~~certain energy efficiency measures, ~~which~~ as specified by the Commission ~~specifies~~, requires field verification and diagnostic testing of as-constructed dwelling units ~~(as defined in Section 7.10)~~ by a certified ~~HERS (~~Home Energy Rating System (HERS) rater. The Commission approves HERS providers, subject to the Commission's HERS regulations, which appear in the California Code of Regulations, Title 20, Division 2, Chapter 4, Article 8, Sections 1670-1675. Approved HERS providers are authorized to certify HERS raters and are required to maintain quality control over HERS rater field verification and diagnostic testing ~~ratings.~~activities.

When compliance documentation indicates field verification and diagnostic testing of specific energy efficiency measures as a condition for complying with Title 24, Part 6, an approved HERS provider and certified HERS rater shall be used to conduct the field verification and diagnostic testing. HERS providers and HERS raters shall be considered special inspectors by building departments~~,~~ and shall demonstrate competence, to the satisfaction of the building official, for the visual inspections and diagnostic testing~~. The HERS provider and rater~~ that they perform. Per California Code of Regulations, Title 20, Division 2, Chapter 4, Article 8, Section § 1673(i)(2), "Providers and raters shall be independent entities from the builder ~~or~~ and from the subcontractor installer of ~~the~~ energy efficiency improvements ~~being tested and~~ field verified~~, and shall have~~ or diagnostically tested." An "Independent Entity means having no financial interest in, and not advocating or recommending the ~~installation~~use of ~~the improvements.~~any product or service as a means of gaining increased business with, firms or persons specified in CCR Title 20, Division 2, Chapter 4, Article 8, Section 1673(i)." CCR Title 20, Division 2, Chapter 4, Article 8, Section §1671. Third Party Quality Control Programs approved by the Commission may serve some of the ~~function~~functions of HERS raters for field verification purposes as specified in ~~section 7.7~~Section RA2.6.

The remainder of this chapter describes the:

- Measures that require field verification or diagnostic testing ~~(including references to test procedures or protocols that shall be followed by installers and HERS raters)~~;
- Required documentation and communication steps;
- ~~Requirements for certification by the installer that the installation complies;~~
- ~~Required HERS rater verification procedures, and sampling procedures to be used if the builder chooses to do sampling;~~
- ~~Requirements for Third Party Quality Control Programs that are authorized to serve the function of HERS raters;~~
- ~~Requirements for sampling when field verification and diagnostic testing is required for additions and alterations; and~~
- Responsibilities ~~of~~ assigned to each of the parties involved in the field verification and diagnostic testing process~~.~~;
- Requirements for installation certification by the installer;
- Requirements for HERS rater field verification and diagnostic test documentation and enforcement procedures;

- Requirements for sampling procedures;
- Requirements for Third Party Quality Control Programs;
- Requirements for HERS compliance when performing alterations;

RA2.2 Measures ~~Required~~that Require Field Verification and Diagnostic Testing

Table RA2-1 describes the measures that require installer certification and HERS rater field verification and diagnostic testing, and identifies the protocol or test procedure in the residential appendices that shall be used for completing installer and HERS rater field verification and diagnostic testing ~~and HERS rater field verification~~.

Table ~~R7~~RA2-1 – Summary of Measures Requiring Field Verification and Diagnostic Testing

~~Measure Title~~	~~Description~~	~~Protocol or Test Procedure~~
	~~Duct Measures~~	
~~Duct Sealing~~	~~Package D requires that space conditioning ducts be sealed. If sealed and tested ducts are claimed in the proposed design ACM calculation, diagnostic testing is required to verify that leakage is less than the specified criteria.~~	~~ACM RC-2005~~
~~Supply Duct Location, Surface Area and R-factor~~	~~If compliance credit is claimed for improved supply duct location, surface area and R-value, field verification is required to verify that duct system was installed according to the design, including location, size and length of ducts, duct insulation R-value and installation of buried ducts.~~[1]	~~ACM RC-2005~~
	~~Air Conditioner Measures~~	
~~Improved Refrigerant Charge~~	~~Package D requires in some climate zones that split system air conditioners and heat pumps be diagnostically tested in the field to verify that they have the correct refrigerant charge (see Section 4.7.3). The Proposed Design is modeled with less efficiency if diagnostic testing and field verification is not performed.~~	~~ACM RD-2005~~
~~Installation of Thermostatic l Expansion Valve (TXV)~~	~~A TXV may be installed as an alternative to refrigerant charge testing. The existence of a TXV has the same calculated benefit as refrigerant charge testing and requires field verification.~~	~~ACM RI-2005~~
~~Adequate Air Flow~~	~~Air conditioner efficiency requires adequate airflow across the evaporator coil. Compliance credit may be taken when airflow is higher than the criteria specified~~	~~ACM RE-2005~~
~~Air Handler Fan Watt Draw~~	~~If compliance credit is taken for reductions in fan power, the installed fan power shall be diagnostically tested and verified in the field.~~	~~ACM RE-2005~~
~~High Energy Efficiency Ratio (EER)~~	~~Compliance credit may be taken for increases in EER by installation of specific air conditioner or heat pump models, but only if the installation of that high EER model is field verified.~~	~~ACM RI-2005~~
~~Maximum Cooling Capacity~~	~~An additional compliance credit may be taken when the requirements for the combination of adequate air flow, duct sealing and Improved refrigerant charge are met and air conditioners are sized according to the ACM calculations. Field verification is required.~~	~~ACM RF-2005~~
	~~Building Envelope Measures~~	
~~Building Envelope Sealing~~	~~The default building envelope specific leakage area (SLA) is specified in Section 4.5.1. Compliance credit may be taken for improved building envelope sealing, but only if lower SLA values are field verified through diagnostic testing.~~	~~ASTM E779~~
~~High Quality Insulation Installation~~	~~ACMs recognize Standard and improved envelope construction. Compliance credit for improved envelope construction requires field verification.~~	~~ACM RH-2005~~
Measure Title	Description	Protocol or Test Procedure
	Duct Measures	
Duct Sealing	Component Packages require that space conditioning ducts be sealed. If sealed and tested ducts are claimed for compliance , field verification and diagnostic testing is required to verify that approved duct system materials are utilized, and that duct leakage meets the specified criteria	Reference Residential Appendix RA3.1
Supply Duct Location, Surface Area and Rvalue	Compliance credit can be taken for improved supply duct location, surface area and R-value. Field verification is required to verify that the duct system was installed according to the design, including location, size and length of ducts, duct insulation R-value and installation of buried ducts.[1] The system must also meet the Adequate Airflow requirement.	Reference Residential Appendix RA3.1

~~Measure Title~~	~~Description~~	~~Protocol or Test Procedure~~
Low Leakage Ducts in Conditioned Space	Compliance credit can be taken for verified duct systems that have air leakage to outside conditions equal to or less than 25 cfm when measured in accordance with Reference Residential Appendix Section RA3.1.4.3.6. Field Verification for ducts in conditioned space is required. Duct sealing is required.	Reference Residential Appendix RA3.1
Low Leakage Air Handlers	Compliance credit can be taken for installation of a factory sealed air handler unit tested by the manufacturer and certified to the Commission to have achieved a 2 percent or less leakage rate. Field verification of the air handler's model number is required. Duct Sealing is required.	Reference Residential Appendix RA3.1
	Air Conditioning Measures	
Improved Refrigerant Charge	Component Packages require in some climate zones that split system air conditioners and heat pumps be diagnostically tested in the field to verify that the system has the correct refrigerant charge (see Residential ACM Manual Section 4.7.3). For the performance method, the Proposed Design is modeled with less efficiency if diagnostic testing and field verification is not performed. The system must also meet the Adequate Airflow requirement.	Reference Residential Appendix RA3.2
Installation of Charge Indicator Light	Component Packages specifies that a Charge Indicator Light can be installed as an alternative to refrigerant charge testing. The existence of a Charge Indicator Light has the same calculated benefit as refrigerant charge testing. Field verification is required.	Reference Residential Appendix RA3.4
Evaporator Fan Flow	Compliance credit can be taken when airflow is higher than the criteria specified. Field verification and diagnostic testing is required.	Reference Residential Appendix RA3.3
Air Handler Fan Watt Draw	Compliance credit can be taken for reductions in fan power. Diagnostic testing and field verification is required. The system must also meet the Adequate Airflow requirement.	Reference Residential Appendix RA3.3
High Energy Efficiency Ratio (EER)	Compliance credit can be taken for increased EER by installation of specific air conditioner or heat pump models. Field verification is required.[2]	Reference Residential Appendix RA3.4
Maximum Cooling Capacity	The calculations for determining Maximum Cooling Capacity need not be field verified, but the prerequisites to taking the credit – evaporator fan flow, duct sealing, improved refrigerant charge, and EER – must be field verified and diagnostically tested.	Reference Residential Appendix RA3.1, RA3.2, RA3.3, RA3.4
Evaporatively Cooled Condensers	Compliance credit can be taken for installation of evaporatively cooled condensers. Duct Sealing is required. Field verification is required.	Reference Residential Appendices RA3.1, RA3.4
Ice Storage Air Conditioners	Compliance Credit can be taken for installation of distributed energy storage equipment. Duct sealing is required. Field verification is required	Reference Residential Appendices RA3.1, RA3.4
	Building Envelope Measures	
Building Envelope Sealing	The default building envelope Specific Leakage Area (SLA) is specified in Residential ACM Manual Section 3.3.3. Compliance credit can be taken for improved building envelope sealing. Field verification and diagnostic testing is required to confirm reduced infiltration.	ASTM E779-03
High Quality Batt Insulation Installation	ACMs recognize standard and improved envelope construction. Compliance credit can be taken for quality installation of batt insulation. Field verification is required.	Reference Residential Appendix RA3.5
Quality Insulation Installation for Spray Polyurethane Foam	Closed-cell spray polyurethane foam insulation must be installed pursuant to the procedures of JA7. If the installation pursuant to JA7 is certified by a HERS rater, a compliance credit can be taken.	Reference Joint Appendix JA7
	Solar Measures	
PV Field Verification Protocol	To receive rebates for photovoltaic installations pursuant to the New Solar Home Partnership, the output of the installed system must be measured and shown to comply with the output specified on the rebate application (taking into account variables such as the solar insulation, the time, and the temperature).	Reference Residential Appendix RA3.6

~~Measure Title~~	~~Description~~	~~Protocol or Test Procedure~~

1. Note: Compliance credit for increased duct insulation R-value (not buried ducts) may be taken without field verification if the R-value is the same throughout the building, and for supply ducts located in crawlspaces and garages where all supply registers are either in the floor or within 2 feet of the floor. These two credits may be taken subject only to building department inspection.
2. Note: The requirement for verification of a high EER does not apply to equipment rated only with an EER.

All features that require field verification and/or diagnostic testing shall be listed in the *Field Verification ~~And~~ and Diagnostic Testing* section of ~~on~~ the *Certificate of Compliance* ~~(CF-1R)~~. The listing shall include "eligibility and installation criteria" for such features. Field verified and diagnostically tested features shall be described in the *Compliance Supplement*. Installers shall certify that the requirements for compliance have been met on the Installation Certificate ~~(CF-6R)~~. Field Verification and diagnostic testing shall be performed by a HERS rater and documented on the Certificate of Field Verification and Diagnostic Testing ~~(CF-6R)~~.

RA2.3 Summary of Documentation and Communication

The documentation and communication process for measures that require field verification and diagnostic testing is summarized below. The subsequent sections of this chapter contain additional information and requirements that apply to all situations; however the section on alterations, RA2.8, applies specifically to the differences in the requirements for alterations. Section RA2.7 applies specifically to the differences in the requirements for Third Party Quality Control Programs.

- The documentation author shall complete the compliance documents, including the ~~CF-1R.~~Certificate of Compliance. A ~~CF-1R~~Certificate of Compliance shall be prepared for each dwelling unit. For multi-family buildings a single ~~CF-1R~~Certificate of Compliance is typically prepared for a whole building, but separate compliance documentation shall be required for dwelling units that have measures requiring field verification and diagnostic testing~~.~~. For dwellings that have features requiring HERS verification, the documentation author shall submit the certificate of compliance information in electronic format to a HERS provider's data registry to register the document data. After submittal of the Certificate of Compliance information, the documentation author shall access the registered Certificate of Compliance from the provider's data registry for submittal to the builder. Refer to Appendix JA1 for the definitions for "HERS provider data registry", and for "registered document".
- The documentation author shall provide a signed registered Certificate of Compliance ~~(CF-1R)~~ to the builder~~, which~~ that indicates ~~that~~ any HERS diagnostic testing and field verification ~~measure is~~measures required for compliance, and displays the unique registration number assigned by the provider data registry. The registered Certificate of Compliance shall be verified and signed by the principal designer/owner prior to submittal to the building department for filing with the building plans. The certification signatures may be original wet signatures on paper documents, or electronic signatures on electronic documents.
- The builder shall make arrangements for transmittal of a signed copy of the registered Certificate of Compliance – for dwellings that have features requiring HERS verification – to the data registry of a HERS provider. The builder shall also arrange for the services of a certified HERS rater prior to installation of the measures, so that once the installation is complete the HERS rater has ample time to complete the field verification and diagnostic testing without delaying final approval of ~~occupancy~~the dwelling unit by the building department. The Builder shall make available to the HERS rater a copy of the registered Certificate of Compliance that was approved/signed by the principal designer/owner and submitted to the building department. The registered copies submitted to the HERS provider and to the HERS rater may be in paper or electronic format.
- The builder or subcontractor ~~installs~~shall install the measure(s) that require field verification and diagnostic testing. The builder or ~~installer completes~~subcontractor shall perform diagnostic testing ~~and~~ using the procedures specified in Section ~~7~~RA2.5. When the installation is complete, the builder or subcontractor ~~completes the CF-6R (~~responsible for the performance of the installation shall make arrangements for transmittal of the Installation Certificate~~), keeping it~~ information to the HERS

provider data registry. After submittal of the Installation Certificate information, the builder or subcontractor shall access the registered Installation Certificate from the provider's data registry, sign the registered Installation Certificate, post a copy at the building site for review by the building inspector, and submit a copy to the building department~~. A copy~~ for filing with the building plans. Alternatively, the enforcement agency shall authorize the submittal of a signed copy of the ~~CF-6R is~~ registered Installation Certificate(s) for retention to a HERS provider's data registry. These filings may be paper or electronic documents. The builder or subcontractor shall also ~~provided~~provide a signed copy of the registered Installation Certificate to the HERS rater. The copy submitted to the rater may be in paper or electronic format.

- The HERS rater shall confirm that transmittal to the HERS provider's data registry of the Certificate of Compliance information and the Installation Certificate information has been completed for each dwelling unit having features requiring HERS verification. The HERS rater shall complete the field verification and diagnostic testing as specified in Section ~~7~~RA2.6~~, and provides signed CF-4Rs,~~. The HERS rater shall enter the test results into the HERS provider's data registry.
- The HERS provider shall make available registered copies of the Certificate of Field Verification and Diagnostic Testing~~,~~ to the HERS ~~provider~~rater, builder, and building department.
- The building department shall not approve a dwelling unit ~~for occupancy~~ until the building department has received, for filing with the building plans, a registered copy of the Installation Certificate that has been signed by the builder or subcontractor, and a registered copy of the ~~CF-4R~~ Certificate of Field Verification and Diagnostic Testing that has been signed by the ~~certified~~ HERS rater, or has confirmed that the enforcement agency's authorized submittal to the HERS provider data registry of the documents has been completed. The HERS provider shall make document verification services available, via phone or internet communications interface, to building departments, builders and contractors, HERS raters, the Energy Commission, and other authorized users of the provider data registry. The HERS provider shall insure that the content and approval signatures for copies of submitted Certificate(s) of Compliance, Installation Certificate(s), and Certificate(s) of Field Verification and Diagnostic Testing are retained per Title 20, Division 2, Chapter 4, Article 8, Section 1673(d).

~~*7.4 Installer Requirements for Installation Certification (CF-6R)*~~

~~Whenever the builder changes subcontractors who are responsible for the feature that is being diagnostically field verified and tested, the builder shall notify the HERS rater of any subcontractors who have changed, and terminate sampling for the identified group. All dwelling units using *HERS Required Verification* features for compliance that were installed by previous subcontractors or were subject to verification and testing under the supervision of a previous HERS provider, for which the builder does not have a completed *Certificate of Field Verification and Diagnostic Testing*, shall either be individually tested or included in a separate group for sampling. Dwelling units with installations completed by new subcontractors shall either be individually tested or shall be included in a new sampling group following a new *Initial Field Verification and Testing*.~~

~~The HERS rater shall not notify the builder when sample testing will occur prior to the completion of the work that is to be tested. After the HERS rater notifies the builder when testing will occur, the builder shall not do additional work on the features being tested.~~

~~7.5.3 Re-sampling, Full Testing and Corrective Action,~~

~~When a failure is encountered during sample testing, the HERS rater shall conduct re-sampling to assess whether that failure is unique or the rest of the dwelling units are likely to have similar failings. The HERS rater shall select for re-sampling one of the up to six untested dwelling units in the group.~~

~~If testing in dwelling units in the re-sample confirms that the requirements for compliance credit are met, then the dwelling unit with the failure shall not be considered an indication of failure in the other dwelling units in the group. The HERS rater shall provide a signed and dated *Certificate of Field Verification and*~~

~~*Diagnostic Testing* to the builder, the HERS provider, and the building department for up to six additional dwelling units in the group, including the dwelling unit in the re-sample. The builder shall take corrective action for the dwelling unit with the failure, and then the HERS rater shall retest to verify compliance and issue a signed and dated *Certificate of Field Verification and Diagnostic Testing* to the builder.~~

~~If field verification and testing in the re-sample results in a second failure, the builder shall take corrective action in all unoccupied dwelling units in the group that have not been tested. In cases where corrective action would require destruction of building components, the builder may choose to reanalyze compliance and choose different measures that will achieve compliance. In this case a new Certificate of Compliance shall be completed and submitted to the HERS provider, HERS rater and building department. When a builder chooses to take corrective action, the HERS rater shall conduct field verification and diagnostic testing in each of these dwelling units to verify that problems have been corrected and that the requirements for compliance have been met, and shall report to the HERS provider, the builder, and the building department.~~

RA2.4 Summary of Responsibilities

This section summarizes responsibilities set forth in this chapter and organizes them by the responsible party. *This section is not, however, a complete accounting of the responsibilities of the respective parties.*

RA2.4.1 Builder

The builder shall make arrangements for transmittal of the signed registered Certificate of Compliance, for dwelling units having features that require HERS verification, to the data registry of a HERS provider. The builder shall make arrangements for the services of a certified HERS rater prior to installation of the measures, so that once the installation is complete the HERS rater has ample time to complete the field verification and diagnostic testing without delaying final approval of the building permit by the building department. The Builder shall provide to the HERS Rater a copy of the registered Certificate of Compliance that was approved/signed by the principal designer/owner and submitted to the building department.

The builder or subcontractors responsible for the performance of the installation shall sign the registered Installation Certificate to certify that the installation work meets the requirements for compliance credit shown on the Certificate of Compliance and that the field verification and diagnostic test results reported on the registered Installation Certificate are accurate. The builder or subcontractor shall post a copy of the registered Installation Certificate at the construction site for review by the building inspector, and submit a signed copy to the building department in conjunction with requests for final inspection for each dwelling unit. Alternatively, the building department shall authorize the submittal of the signed registered Installation Certificate(s) for retention to a HERS provider's data registry. These filings may be paper or electronic documents. The builder or subcontractor shall also provide a copy of the registered Installation Certificate to the HERS rater.

If the builder utilizes group sampling for HERS compliance, the builder or the HERS rater shall identify the dwelling units to be included in the sample group for field verification and diagnostic testing.

The builder shall arrange for the submittal of a registered copy of the Certificate of Field Verification and Diagnostic Testing to the building official in conjunction with requests for final inspection for each dwelling unit.

When re-sampling reveals a failure, the builder is required to offer at no charge to all building owners ~~in~~ for occupied dwelling units in the group to complete field verification, diagnostic testing and corrective action if necessary. Building owners may decline to have field verification and diagnostic testing and corrective action completed for the dwelling unit. The builder shall report the identifying location of any dwelling unit in which the building owner declines field verification and diagnostic testing and corrective action to the HERS provider. The ~~B~~builder~~s~~ shall take corrective action as required in all unoccupied dwelling units in the group and in occupied dwelling units in the group where building owners have accepted field verification, diagnostic testing and corrective action.

RA2.4.2 HERS Provider and Rater

For sampling purposes, the HERS provider shall maintain a list of the dwelling units in a group, the number of HVAC systems within each dwelling unit from which sampling is drawn, the dwelling units selected for sampling, the dwelling units sampled, the results of the sampling, any dwelling units selected for re-sampling, the dwelling units that have been tested and verified as a result of re-sampling, and any corrective action taken.

For all dwelling units, the HERS provider shall retain records of all information content and approval signatures for completed forms: Certificate of Compliance, Installation Certificate, and Certificate of Field Verification and Diagnostic Testing for a period of five years.

The HERS rater providing the field verification and diagnostic testing ~~to verify that problems have been corrected and that the requirements for compliance have been met, and shall report to the HERS provider, builder, and the building department.~~ shall transmit all test results to the provider data registry. Registered Certificate of Field Verification and Diagnostic Testing forms from the provider and signed by the rater shall be provided for the tested dwelling unit and each of up to six other dwelling units from a designated group for which compliance is verified based on the results of a sample (or up to 29 other dwelling units under a Third Party Quality Control Program). The provider's registered copy of the Certificate of Field Verification and Diagnostic Testing shall be made available or submitted to the HERS rater, the builder, and the building department.

The HERS rater shall produce a separate Certificate of Field Verification and Diagnostic Testing for each dwelling unit that meets the diagnostic requirements for compliance. The registered Certificate of Field Verification and Diagnostic Testing shall have unique HERS provider-designated identifiers for lot location, registration number and sample group number, and shall include building permit number, time and date stamp, provider logo or seal, and indicate if the dwelling unit has been tested or if it was an untested dwelling unit approved as part of sample testing. The HERS rater shall not sign a Certificate of Field Verification and Diagnostic Testing for a dwelling unit that does not have an Installation Certificate signed by the installer as required in Section RA2.5.

If field verification and diagnostic testing on a sampled dwelling unit identifies a failure to meet the requirements for compliance credit, the HERS rater shall report to the HERS provider, the builder, and the building department that re-sampling will be required.

If re-sampling identifies another failure, the HERS rater shall report to the HERS provider, the builder, and the building department that field verification and diagnostic testing will be required for all the untested dwelling units in the group. The report shall specify the identifying location of all dwelling units that shall be fully tested.

The HERS provider shall also report to the builder once diagnostic testing and field verification has shown that the failures have been corrected in all of the dwelling units except those for which the building owner has declined field verification, diagnostic testing, and corrective action. When field verification and diagnostic testing confirm that the requirements for compliance have been met, the HERS provider shall make available a registered copy of the Certificate of Field Verification and Diagnostic Testing for each dwelling unit in the group.

The HERS provider shall file a report with the building department if there has been a failure on a secondary sample within a group, explaining all ~~action~~actions taken (including field verification, testing, corrective actions, offers to building owners for testing and corrective action, and building owner declines of such offers) to bring into compliance dwelling units for which full testing has been required. ~~If corrective action requires work not specifically exempted by the CMC or the CBC, the builder shall obtain a permit from the building department prior to commencement of any of the work.~~

~~If additional dwelling units in the group are completed during the time required to correct, field verify and test the previously completed dwelling units in the group, the rater shall individually field verify and diagnostically test those additional dwelling units to confirm that the requirements for compliance credit are met.~~

~~Corrections shall not be made to a sampled or re-sampled dwelling unit to avoid a failure. If corrections are made to a sampled or re-sampled dwelling unit to avoid failure, corrections, field verification and testing shall be performed on 100% of the dwelling units in the group.~~

RA2.4.3 Third Party Quality Control Program

An approved Third Party Quality Control Program shall:

- Provide training to participating program installing contractors, installing technicians, and specialty Third Party Control Program subcontractors regarding compliance requirements for measures for which diagnostic testing and field verification is required,
- Collect data from participating installers for each installation completed for compliance credit,
- Complete data checking analysis to evaluate the validity and accuracy of the data to independently determine whether compliance has been achieved,
- Provide direction to the installer to retest and correct problems when data checking determines that compliance has not been achieved,
- Require resubmission of data when retesting and correction is directed, and
- Maintain a database of all data submitted in a format that is acceptable to the Commission and available to the Commission upon request.

The HERS provider shall arrange for the services of an independent HERS rater to conduct independent field verifications of the installation work performed by the participating installing contractor and Third Party Quality Control Program, completing all of the responsibilities of a HERS rater as specified in this Chapter RA2 with the exception that sampling shall be completed for a group of up to thirty dwelling units and sampling and re-sampling shall be completed for a minimum of one out of every thirty sequentially completed dwelling units from the group.

RA2.4.4 Building Department

The building department at its discretion may require independent testing and field verification to be scheduled so that it can be completed in conjunction with the building department's required inspections, and/or observe the field verification and diagnostic testing performed by builders or subcontractors or the certified HERS rater in conjunction with the building department's required inspections to corroborate the results documented on the Installation Certificate(s) and on the Certificate(s) of Field Verification and Diagnostic Testing.

For dwelling units that have used a compliance alternative that requires field verification and diagnostic testing, the building department shall not approve a dwelling unit until the building department has received, for filing with the building plans, a registered Installation Certificate that has been completed and signed by the builder or subcontractor, and a registered copy of the Certificate of Field Verification and Diagnostic Testing that has been signed and dated by the HERS rater. Alternatively, the building department shall authorize the submittal of the signed registered Installation Certificate(s) and signed registered Certificate(s) of Field Verification and Diagnostic Testing for retention to a HERS provider's data registry in which case the building department shall not close a building permit until the building department has confirmed that the enforcement agency's authorized submittal to the HERS provider data registry of the documents has been completed. These filings may be paper or electronic documents. The HERS provider shall make document verification services available, via phone or internet communications interface, to building departments, builders and contractors, HERS raters, the Energy Commission, and other authorized users of the provider data registry. The HERS provider shall insure that the Certificate of Compliance, and Certificate of Acceptance certification information and approval signatures are retained per Title 20 Section 1673(d).

If necessary to avoid delay of approval of dwelling units completed when outside temperatures are below 55°F, building departments may approve compliance credit for refrigerant charge and airflow measurement when installers have used the alternate charging and airflow measurement procedure described in Section RA3. This approval will be on the condition that installers provide a signed agreement to the builder with a copy to the building department to return to correct refrigerant charge and airflow if the HERS rater determines at a later time when the outside temperature is above 55°F that correction is necessary.

RA2.5 Installer Requirements - Installation Certificate Form

Installation Certificates are required for each and every dwelling unit. When the installation of a measure that requires HERS field verification and diagnostic testing is complete, the builder or the builder's subcontractor shall perform field verification and diagnostic testing to confirm and document compliance following the procedures specified in this section RA2.5. When the builder or the installing subcontractor confirms that the installation complies with the Standards requirements, the builder or the installing subcontractor shall make arrangements for transmittal of the Installation Certificate information to the HERS provider data registry. After submittal of the Installation Certificate information, the builder or subcontractor shall access the registered Installation Certificate from the provider's data registry, sign the registered Installation Certificate, post a copy at the building site for review by the building inspector, and submit a copy to the building department for filing with the building plans. Alternatively, the enforcement agency shall authorize the submittal of a signed copy of the registered Installation Certificate(s) for retention to a HERS provider's data registry. These filings may be paper or electronic documents. The builder or subcontractor shall also provide a signed copy of the registered Installation Certificate to the HERS rater. The copy submitted to the rater may be in paper or electronic format.

RA2.5.1 Installer Requirements - Measures Requiring Diagnostic Testing and Field Verification

When the Certificate of Compliance indicates a requirement for HERS verification and diagnostic testing of installed building features, the builder employees or subcontractors shall:

- Perform diagnostic testing for each feature in accordance with procedures specified in Residential Appendix RA3,
- Record the test results for the installation and make arrangements for transmittal of the Installation Certificate information to a HERS provider data registry,
- Access the registered Installation Certificate from the Provider's data registry, and certify on a copy of the registered Installation Certificate that the diagnostic test results and the installation work meets the requirements for compliance credit.

RA2.5.2 Installer Requirements - Measures Requiring Field Verification

When compliance includes supply duct location, surface area and R-value improvements, installation of an air conditioner refrigerant charge indicator light, high air conditioner EER, high quality building envelope construction, or special installation eligibility requirements, the builder employees or subcontractors shall:

- Record the feature on the Installation Certificate,
- Record the Installation information required to field verify the measure, and make arrangements for transmittal of the Installation Certificate information to a HERS provider data registry

- Access the registered Installation Certificate from the Provider's data registry, and certify on a copy of the registered Installation Certificate that the installation work meets the requirements for compliance credit.

RA2.6 HERS Procedures – Verification, Testing, and Sampling

At the builder's option HERS field verification and diagnostic testing shall be completed either for each dwelling unit, or for a sample from a designated group of dwelling units in which the same measure(s) requiring field verification and diagnostic testing is installed in each dwelling unit in the group. Note that if multiple measures requiring field verification and diagnostic testing are installed in dwelling units, sample testing does not have to be completed for all of the measures in the same dwelling unit. Dwelling units in a designated group shall all be located within the same enforcement agency jurisdiction and subdivision or multifamily housing development.

The builder or subcontractor shall provide to the HERS rater a copy of the registered Certificate of Compliance approved/signed by the principal designer/owner and a copy of the registered Installation Certificate signed/certified by the builder employees or subcontractors as required in Section RA2.5. Prior to completing field verification and diagnostic testing, the HERS rater shall verify that transmittal to the HERS provider's data registry of the Certificate of Compliance information, and the Installation Certificate information has been completed, for each dwelling unit having features requiring HERS verification. The HERS rater shall also confirm that the registered installation certifications have been completed as required, and that the installer's diagnostic test results and the installation certification information shows compliance consistent with the Certificate of Compliance.

If field verification and diagnostic testing determines that the requirements for compliance are met, the HERS rater shall transmit the test results to the HERS provider's data registry, whereupon the provider shall make available a registered copy of the Certificate of Field Verification and Diagnostic Testing to the HERS rater, the builder, and the building department. Printed copies, electronic or scanned copies, and photocopies of the provider's registered Certificate of Field Verification and Diagnostic Testing are allowed, subject to verification that the information contained on the copy conforms to the current unique certifying information on file in the provider's data registry for the dwelling.

The HERS rater shall provide a "wet" signature on registered copies of the Certificate of Field Verification and Diagnostic Testing. The Certificate of Field Verification and Diagnostic Testing shall be submitted to the building department. At the discretion of the jurisdiction, provisions shall be made to accommodate submittal of the registered Certificate of Field Verification and Diagnostic Testing in an electronic file format that can be verified as "electronically" signed by the HERS rater, thus entirely sufficient for purposes of documenting the HERS rater's approval and compliance with field verification and diagnostic testing requirements without a "wet" signature.

The HERS provider shall make available via phone or internet communications interface a way for building officials, builders, and HERS raters to verify that the information displayed on copies of submitted Certificate(s) of Field Verification and Diagnostic Testing conforms to the unique identifying information stored in the provider's data registry for the registered Certificate(s) of Field Verification and Diagnostic Testing.

If the builder chooses the sampling option, the procedures described in Section RA2.6.2 shall be followed.

RA2.6.1 HERS Procedures - Initial Model Field Verification and Diagnostic Testing

The HERS rater shall diagnostically test and field verify the first dwelling unit of each model within a subdivision or multifamily housing development. To be considered the same model, dwelling units shall have the same basic floor plan layout, energy design, and compliance features as shown on the CF-1R for each dwelling unit. Variations in the basic floor plan layout, energy design, compliance features, zone floor area, or zone volume, that do not change the HERS features to be tested, the heating or cooling

capacity of the HVAC unit(s), or the number of HVAC units specified for the dwelling units, shall not cause dwelling units to be considered a different model. For multi-family buildings, variations in exterior surface areas caused by location of dwelling units within the building shall not cause dwelling units to be considered a different model. This initial testing allows the builder to identify and correct any potential construction flaws or practices in the build out of each model. If field verification and diagnostic testing determines that the requirements for compliance are met, the HERS rater shall transmit the test results to the HERS provider data registry, whereupon the provider shall make available a registered copy of the Certificate of Field Verification and Diagnostic Testing, to the HERS rater, the builder, and the building department.

RA2.6.2 HERS Procedures – Group Sample Field Verification and Diagnostic Testing

After the initial model field verification and diagnostic testing is completed, the builder or the HERS rater shall identify a group of up to seven dwelling units from which a sample will be selected. If multiple measures requiring field verification and diagnostic testing are installed, each dwelling unit in the group shall have the same measures requiring field verification and diagnostic testing as the other dwelling units in the group. If some dwelling units have installed a different set of measures requiring field verification and diagnostic testing, these dwelling units shall be in a separate group. If dwelling units have forced-air space conditioning equipment that introduces outside air into the conditioned space using means that connect directly to the dwelling unit's air conditioning duct system, these outside air ducted systems shall be considered separate measures and must be placed in separate groups from other dwelling units not having the same outside air measure.

The builder shall identify the group of dwelling units by location of County, City and either the street address or the subdivision and lot number, or the multifamily housing project name and shall identify the names and license numbers of subcontractors responsible for installations requiring diagnostic testing or field verification. The HERS rater shall verify that transmittal to the HERS provider's data registry - for all dwelling units contained in the group - of the Certificate of Compliance information and the Installation Certificate information has been completed for each dwelling unit having features requiring HERS verification. The group shall be closed prior to selection of the sample that will be field verified and diagnostically tested. The HERS rater shall also confirm that the registered installation certifications have been completed as required, and that the installer's diagnostic test results and the installation certification information shows compliance consistent with the registered Certificate of Compliance for the dwelling unit. The builder or the HERS rater may request removal of dwelling units from the group by notifying the HERS provider prior to selection of the sample that will be tested and shall provide justification for the change. Removed dwelling units shall be field verified and diagnostically tested individually or shall be included in a subsequent group for sampling.

There are exceptions to the requirement to have completed Installation Certificate data entered into the provider's data registry prior to selection of the dwelling unit to be sampled. Some HERS measures require multiple verifications during the construction process. The sample group is not required to be closed before HERS field verification and diagnostic testing can begin for the following measures. For these measures the HERS rater is allowed to randomly select the dwelling unit to be field verified from those that are at the proper stage of construction to enable the first of the multiple verifications to be completed.

- **Quality Installation of Insulation** measure requires inspection of the air barrier and inspection of the insulation behind tubs and showers at framing rough-in. Verification of the wall, floor and ceiling insulation must be completed prior to drywall installation. Attic insulation installation may require follow-up verification.
- **Buried Ducts** measure requires verification of the duct design prior to verification of the attic insulation.
- **Duct Surface Area** requires verification of the duct design prior to installation of the attic insulation.

The HERS rater, with no direction from the installer or builder, shall randomly select a minimum of one dwelling unit from the closed group for field verification and diagnostic testing. The HERS rater shall diagnostically test and field verify the selected dwelling unit(s). The HERS rater shall enter the test and/or field verification results into the HERS provider's data registry regardless of whether the results indicate a pass or fail. If the test fails then the failure must be entered into the provider's data registry even if the installer immediately corrects the problem. In addition, the procedures in section RA2.6.3 shall be followed.

If field verification and diagnostic testing determines that the requirements for compliance are met, the HERS rater shall enter the test results into the HERS provider's data registry. Whereupon the provider shall make available to the HERS rater, the builder, and the building department, a registered copy of the Certificate of Field Verification and Diagnostic Testing. The Certificate of Field Verification and Diagnostic Testing shall report the successful diagnostic testing results and conclusions regarding compliance for the tested dwelling unit. The Certificate of Field Verification and Diagnostic Testing shall also provide:

- Building permit number for the dwelling unit
- Registration Number – a HERS provider-designated identification number unique to the dwelling unit
- Group Number – a HERS provider-designated identification number unique to the sample group
- Time and date stamp of the provider's issuance of the registered Certificate of Field Verification and Diagnostic Testing
- Provider's logo or official seal

The HERS provider shall also make available to the HERS rater, the builder, and the building department a registered copy of the Certificate of Field Verification and Diagnostic Testing for all other dwelling units in the group. Each Certificate of Field Verification and Diagnostic Testing issued for the group shall disclose the unique registration numbers and the building permit numbers for all of the dwelling units contained in the group and shall indicate which home was actually tested.

Whenever the builder changes subcontractors who are responsible for the feature that is being diagnostically field verified and tested, the builder shall notify the HERS rater of any subcontractors who have changed and terminate sampling for the identified group. All dwelling units utilizing features that require HERS verification for compliance that were installed by previous subcontractors or were subject to verification and testing under the supervision of a previous HERS provider, for which the builder does not have a completed Certificate of Field Verification and Diagnostic Testing and Diagnostic Testing, shall either be individually tested or included in a separate group for sampling. Dwelling units with installations completed by new subcontractors shall either be individually tested or shall be included in a new sampling group.

The HERS rater shall not notify the builder when sample testing will occur prior to the completion of the work that is to be tested, or prior to entry of the Installation Certificate data into the provider's data registry. After the HERS rater selects the sample dwelling unit to test, and notifies the builder that testing will occur, the builder shall not do additional work on the features being tested.

The HERS provider shall close the group within 6 months after the earliest signature date shown on any Installation Certificate in the group. The HERS provider shall notify the HERS rater that the group has been closed, and a sample must be selected for field verification and diagnostic testing. Thus if a group is required to close due to the 6 month limit, field verification and diagnostic testing shall be conducted on a minimum of one dwelling unit randomly selected from the dwelling units assigned to the group regardless of how many dwellings are assigned to the group.

RA2.6.3 HERS Procedures - Re-sampling, Full Testing and Corrective Action

When a failure is encountered during sample testing, the failure must be entered into the provider's data registry. Corrective action shall be taken on the failed dwelling unit and the dwelling unit shall be retested to verify that corrective action was successful. Corrective action and retesting on the dwelling unit shall be repeated until the testing indicates compliance and the results have been entered into the HERS

provider's data registry, or the dwelling unit complies using an alternative method. In addition, the HERS rater shall conduct re-sampling to assess whether the first failure in the group is unique, or if the rest of the dwelling units in the group are likely to have similar failings. The HERS rater shall then randomly select for re-sampling one of the remaining untested dwelling units in the group for retesting of the feature that failed.

If the testing of the second randomly selected dwelling unit in the group confirms that the requirements for compliance credit are met on that unit, then the dwelling unit with the initial failure shall not be considered an indication of failure in the untested dwelling units in the group. The HERS rater shall transmit the re-sample test results to the HERS provider registry, whereupon the provider shall make available to the HERS rater, the builder, and the building department, a registered copy of the Certificate of Field Verification and Diagnostic Testing, for the remaining dwelling units in the group including the dwelling unit in the re-sample.

If field verification and diagnostic testing of the second sample results in a failure, the HERS rater shall report the second failure to the HERS provider, the builder, and the building department. All dwelling units in the group must thereafter be individually field verified and diagnostically tested. In cases where corrective action would require destruction of building components, the builder may choose to reanalyze compliance and choose different measures that will achieve compliance. In this case a new Certificate of Compliance shall be completed and submitted to the HERS provider, the HERS rater, and the building department. Even with a new Certificate of Compliance, the dwelling unit must still be individually field verified and diagnostically tested. Upon verification of compliance, the HERS rater shall enter the test results into the HERS provider data registry. Whereupon the provider shall make available to the HERS rater, the builder, and the building department, a registered copy of the Certificate of Field Verification and Diagnostic Testing for each individual dwelling in the group.

Builders shall offer to complete field verification and diagnostic testing and any necessary corrective action at no charge to building owners (for a definition of "building owner" and of other terms used see Appendix JA1) in occupied dwelling units in the group. Builders shall report to the HERS provider the identifying location of any dwelling unit in which the building owner/occupant declines field verification and diagnostic testing and corrective action. The HERS provider shall verify that the builder has made this offer. If a building owner of a dwelling unit declines this offer, field verification, diagnostic testing, and corrective action will not be required for that dwelling unit and the dwelling unit will no longer be considered a part of the group. If a building owner accepts this offer, the builder shall take corrective action, and the HERS rater shall conduct field verification and diagnostic testing to verify that problems have been corrected. Upon verification of compliance, the HERS rater shall transmit the test results to the HERS provider data registry. Whereupon the provider shall make available to the HERS rater, the builder, and the building department a certified copy of the Certificate of Field Verification and Diagnostic Testing for the dwelling unit.

The HERS provider shall file a report with the building department explaining all actions taken (including field verification, diagnostic testing, corrective action, offers to building owners for testing and corrective action, and/or building owner declines of such offers) to bring into compliance dwelling units for which full testing has been required. If corrective action requires work not specifically exempted by the CMC or the CBC, the builder shall obtain a permit from the building department prior to commencement of any of the work.

Corrections to avoid reporting a failure to the HERS provider data registry shall not be made to a sampled dwelling unit after the HERS rater selects the sample dwelling unit. If it is evident that such corrections have been made to a sampled dwelling unit to avoid reporting a failure, field verification and diagnostic testing shall be required for 100% of the dwelling units in the group.

RA2.7 Third Party Quality Control Programs

The Commission may approve Third Party Quality Control Programs that serve some of the ~~function~~functions of HERS raters for field verification purposes but do not have the authority to sign compliance documentation as a HERS rater. Third Party Quality Control Programs shall provide training

to installers regarding compliance requirements for measures for which diagnostic testing and field verification is required. Third Party Quality Control Programs shall collect data from participating installers for each installation completed for compliance credit, ~~complete~~provide data checking analysis to evaluate the validity and accuracy of the data to independently determine whether compliance has been achieved, provide direction to the installer to retest and correct problems when data checking determines that compliance has not been achieved, require resubmission of data when retesting and correction is directed, and maintain a database of all data submitted by installers in a format that is acceptable to the Commission and available to the Commission upon request. The data that is collected by the Third Party Quality Control Program shall be more detailed than the data required for showing compliance with the Standards, shall provide an independent check on the validity and accuracy of the installer's claim that compliance has been achieved, and shall not be alterable by the installer to indicate that compliance has been achieved when in fact compliance has not been achieved.

The ~~Third Party Quality Control Program~~HERS provider shall ~~also obtain~~ arrange for the services of a HERS rater to conduct independent field ~~verifications~~verification of the installation work performed by the participating installing contractor and Third Party Quality Control Program, completing all of the responsibilities of a HERS rater as specified in this Chapter with the exception that ~~sampling~~ one sample shall be ~~completed for~~ selected and field verified within a group of up to thirty dwelling units ~~with a minimum sample of one out of every~~(or thirty ~~sequentially completed dwelling units from the group.~~HVAC systems). The HERS rater shall be an independent entity from the Third Party Quality Control Program. Re-sampling, ~~Full Testing and Corrective Action~~full testing and corrective action shall be completed as specified in section ~~7~~RA2.6.3 with the exception that re-sampling shall be completed for a minimum of one out of every thirty dwelling units from the group. The Third Party Quality Control Program shall not impose restrictions on the HERS rater or the HERS provider that limit their independence, or the ability of the HERS rater or the HERS provider to properly perform their functions. For example, the Third Party Quality Control Program shall not impose restrictions on the HERS rater's use of equipment beyond those required by the Commission.

The Third Party Quality Control Program shall meet ~~all of~~ the requirements ~~of~~ imposed on a HERS rater specified in the Commission's HERS Program regulations (California Code of Regulations, Title 20, Division 2, Chapter 4, Article 8, Sections 1670 -1675), including the requirement to be an independent entity from the builder ~~and~~, the HERS rater that provides independent field verifications~~,~~, and the subcontractor installer as specified by section 1673(i). ~~A~~ However, a Third Party Quality Control Program may have business relationships with installers participating in the ~~Program~~program to advocate or promote the ~~Program~~program and an installer's participation in the ~~Program~~program, and to advocate or promote products that the Third Party Quality Control Program sells to installers as part of the Program.

Prior to approval by the Commission, the Third Party Quality Control Program shall provide a detailed explanation to the Commission of 1) the data that is to be collected from the installers, 2) the data checking process that will be used to evaluate the validity and accuracy of the data, 3) the justification for why this data checking process will provide strong assurance that the installation actually complies, and 4) the format for the database that will be maintained and provided to the Commission upon request. The Third Party Quality Control Program may apply for a confidential designation of this information as specified in the Commission's Administrative Regulations (California Code of Regulations, Title 20, Division 2, Chapter 7, Article 2, Section 2505). The Third Party Quality Control Program shall also provide a detailed explanation of the training that will be provided to installers, and the procedures that it will follow to complete independent field verifications.

The Third Party Quality Control Program certified installing contractor and the installing contractor's responsible installing technicians shall be required to be trained in quality installation procedures; the requirements of this appendix RA2; and any other applicable specialized Third Party Quality Control Program-specific procedures as a condition to participation in the program. The training requirements also apply to the installing contractor's specialty subcontractors who provide Third Party Quality Control Program services. All installation verification and diagnostic work performed in the program shall be subject to the same quality assurance procedures as required by the Energy Commission's HERS program regulations.

The Third Party Quality Control Program shall be considered for approval as part of the rating system of a HERS Provider, which is certified as specified in the Commission's HERS Program regulations, Section 1674. A Third Party Quality Control Program can be added to the rating system through the recertification of a certified HERS Provider as specified by Title 20, Division 2, Chapter 4, Article 8, Section 1674(d).

RA2.8 Installer Requirements and HERS Procedures for ~~Additions or~~ Alterations

This section on alterations describes the differences that apply to alterations. Otherwise the procedures and requirements detailed in previous sections shall also apply to alterations where "HVAC system" is substituted for "dwelling unit". For alterations, building owners or their agents may carry out the actions that are assigned to builders in previous sections of this document (RA2).

When compliance for an ~~addition or~~ alteration requires field verification and diagnostic testing ~~and field verification~~, the building owner may choose for the ~~testing and~~ field verification and diagnostic testing to be completed for the dwelling unit ~~alone or~~individually, or alternatively, as part of a designated sample group of dwelling units for which the same installing company has completed work that requires testing and field verification for compliance. The building owner or agent of the building owner shall complete the applicable portions of a Certificate of Compliance ~~(CF-1R). The HERS provider shall define the group for sampling purposes as all dwelling units where the building permit applicant has chosen to have testing and field verification completed as part of a sample for the same installing company. The group shall be no larger than seven. The installing company may request a smaller group for sampling. Whenever the HERS rater for the group is changed, a new group will be established. Initial Field Verification and Testing shall be completed for the first dwelling unit in each group. Re-sampling, Full Testing and Corrective Action shall be completed if necessary as specified by section 7.6.3.~~. The building owner or agent shall make arrangements for transmittal of the Certificate of Compliance information to the provider data registry identifying the building features and measures requiring HERS verification. The building owner shall also submit an approved/signed copy of the registered Certificate of Compliance to the HERS rater.

~~Field verification may be completed by an approved Third Party Quality Control Program as specified in section 7.7. The group for sampling purposes shall be no larger than thirty when a Third Party Quality Control Program is used. The Third Party Quality Control Program may define the group instead of the Provider. When a Third Party Quality Control Program is used, the CF-6R shall document that data checking has indicated that the dwelling unit complies. The~~ The installer shall perform diagnostic testing and the procedures specified in Section RA2.5.

When the installation is complete, the person responsible for the performance of the installation shall make arrangements for transmittal of the Installation Certificate information to the HERS provider data registry. After submittal of the Installation Certificate information, the person responsible for the performance of the installation shall access the registered Installation Certificate from the provider's data registry, sign the registered Installation Certificate, post a copy at the building site for review by the building inspector, and submit a copy to the building department for filing with the building plans. Alternatively, the enforcement agency shall authorize the submittal of the signed Installation Certificate(s) for retention to a HERS provider's data registry. These filings may be paper or electronic documents. The builder or subcontractor shall also provide a signed copy of the registered Installation Certificate to the HERS rater. The copy submitted to the rater may be in paper or electronic format.

The HERS rater shall verify that transmittal to the HERS provider's data registry of the Certificate of Compliance information and the Installation Certificate information has been completed for each dwelling unit having features requiring HERS verification. The HERS rater shall also confirm that the registered installation certifications have been completed as required, and that the installer's diagnostic test results and the installation certification information shows compliance consistent with the registered Certificate of Compliance for the unit.

If group sampling is utilized for compliance, the HERS rater shall define a group of up to seven dwelling units for sampling purposes, requiring that all dwelling units within the group have been serviced by the same installing company. The installing company may request a group for sampling that is smaller than

seven dwelling units. Whenever the HERS rater for the group is changed, a new group shall be established.

Re-sampling, full testing, and corrective action shall be completed if necessary as specified by Section RA2.6.3.

Third Party Quality Control Programs, as specified in section RA2.7, may also be used with alterations.

The building department shall not close a building permit until the building department has received a completed registered copy of the Installation Certificate that has been signed by the installer, and a completed, registered copy of the Certificate of Field Verification and Diagnostic Testing from the provider that has been signed by the HERS rater. Alternatively, the building department shall authorize the submittal of the signed registered Installation Certificate(s) and Certificate(s) of Field Verification and Diagnostic Testing for retention to a HERS provider's data registry, in which case the building department shall not close a building permit until the building department has confirmed that the enforcement agency's authorized submittal to the HERS provider data registry of the documents has been completed. These filings may be paper or electronic documents. The HERS provider shall make document verification services available, via phone or internet communications interface, to building departments, builders and contractors, HERS raters, the Energy Commission, and other authorized users of the provider data registry. The HERS provider shall insure that the Certificate of Compliance, and Installation Certificate certification information and approval signatures are retained per Title 20 Section 1673(d).

The building official may approve compliance based on the ~~CF-6R~~registered Installation Certificate on the condition that if sampling indicates that re-sampling, full testing and corrective action is necessary, such work shall be completed.

~~*7.8 Summary of Responsibilities*~~

~~This section summarizes responsibilities described previously in this chapter and organizes them by the responsible party.~~

~~7.8.1 Builder~~

~~The builder shall make arrangements for the services of a certified HERS rater prior to installation of the measures, so that once the installation is complete the HERS rater has ample time to complete the field verification and diagnostic testing without delaying final approval of occupancy by the building department.~~

~~Builder employees or subcontractors responsible for completing either diagnostic testing, visual inspection or verification as specified in Section 7.5 shall certify the diagnostic testing results and that the work meets the requirements for compliance credit on the CF-6R.~~

~~The builder shall provide the HERS rater with the identifying location of the group of dwelling units to be included in the sample for field verification and diagnostic testing. The builder shall provide the HERS provider a copy of the CF-6R signed by the builder employees or sub-contractors certifying that diagnostic testing and installation meet the requirements for compliance credit.~~

~~The builder shall provide a *Certificate of Field Verification and Diagnostic Testing* (CF-4R) signed and dated by the HERS rater to the building official in conjunction with requests for final inspection for each dwelling unit.~~

~~When re-sampling reveals a failure, builders shall offer, at no charge to building owners in occupied dwelling units in the group, to complete field verification, testing and corrective action if necessary. Building owners may decline to have field verification and testing and corrective action completed. Builders shall report the identifying location of any dwelling unit in which the building owner declines field verification and testing and corrective action to the HERS provider. Builders shall take corrective action as required in all unoccupied dwelling units in the group and in occupied dwelling units in the group where building owners have accepted field verification, testing and corrective action.~~

~~7.8.2 HERS Provider and Rater~~

~~The HERS provider shall maintain a list of the dwelling units in the group from which sampling is drawn, the dwelling units selected for sampling, the dwelling units sampled and the results of the sampling, the dwelling units selected for re-sampling, the dwelling units that have been tested and verified as a result of re-sampling, the corrective action taken, and copies of all *Certificates of Field Verification and Diagnostic Testing* for a period of five years.~~

~~The HERS rater providing the diagnostic testing and verification shall sign and date a *Certificate of Field Verification and Diagnostic Testing* certifying that he/she has verified that the requirements for compliance credit have been met. *Certificates of Field Verification and Diagnostic Testing* shall be provided for the tested dwelling unit and each of up to six other dwelling units from the group for which compliance is verified based on the results of the sample. The HERS rater shall provide this certificate to the builder, the HERS provider, and the building department.~~

~~The HERS rater shall provide a separate *Certificate of Field Verification and Diagnostic Testing* for each dwelling unit the rater determines has met the diagnostic requirements for compliance. The HERS rater shall identify on the *Certificate of Field Verification and Diagnostic Testing* if the dwelling unit has been tested or if it was an untested dwelling unit approved as part of sample testing. The HERS rater shall not sign a *Certificate of Field Verification and Diagnostic Testing* for a dwelling unit that does not have a CF-6R signed by the installer as required in Section 7.5.~~

~~If field verification and testing on a sampled dwelling unit identifies a failure to meet the requirements for compliance credit, the HERS rater shall report to the HERS provider, the builder, and the building department that re-sampling will be required.~~

~~If re-sampling identifies another failure, the HERS rater shall report to the HERS provider, the builder, and the building department that corrective action and diagnostic testing and field verification will be required for all the untested dwelling units in the group. This report shall specify the identifying location of all dwelling units that shall be fully tested and corrected.~~

~~The HERS provider shall also report to the builder once diagnostic testing and field verification has shown that the failures have been corrected in all of the dwelling units except those for which the building owner has declined field verification, testing and corrective action.~~

~~When individual dwelling unit testing and verification confirms that the requirements for compliance have been met, the HERS rater shall provide a *Certificate of Field Verification and Diagnostic Testing* for each dwelling unit in the group.~~

~~The HERS provider shall file a report with the building department explaining all action taken (including field verification, testing, corrective actions, offers to building owners for testing and corrective action, and building owner declines of such offers) to bring into compliance dwelling units for which full testing has been required.~~

~~7.8.3 Third Party Quality Control Program~~

~~An approved Third Party Quality Control Program shall:~~

- ~~Provide training to installers regarding compliance requirements for measures for which diagnostic testing and field verification is required,~~
- ~~Collect data from participating installers for each installation completed for compliance credit,~~
- ~~Complete data checking analysis to evaluate the validity and accuracy of the data to independently determine whether compliance has been achieved,~~
- ~~Provide direction to the installer to retest and correct problems when data checking determines that compliance has not been achieved,~~
- ~~Require resubmission of data when retesting and correction is directed, and~~

- ~~Maintain a database of all data submitted in a format that is acceptable to the Commission and available to the Commission upon request.~~

~~The Third Party Quality Control Program shall obtain the services of an independent HERS rater to conduct independent field verifications, completing all of the responsibilities of a HERS rater as specified in this Chapter with the exception that sampling shall be completed for a group of up to thirty dwelling units and sampling and re-sampling shall be completed for a minimum of one out of every thirty sequentially completed dwelling units from the group.~~

~~7.8.4 Building Department~~

~~The building department at its discretion may require independent testing and field verification to be scheduled so that it can be completed in conjunction with the building department's required inspections, and/or observe the diagnostic testing and field verification performed by builder employees or subcontractors and the certified HERS rater in conjunction with the building department's required inspections to corroborate the results documented in installer certifications, and in the *Certificate of Field Verification and Diagnostic Testing*.~~

~~For dwelling units that have used a compliance alternative that requires field verification and diagnostic testing, the building department shall not approve a dwelling unit for occupancy until the building department has received a *Certificate of Field Verification and Diagnostic Testing* that has been signed and dated by the HERS rater.~~

~~If necessary to avoid delay of approval of dwelling units completed when outside temperatures are below 55°F, building departments may approve compliance credit for refrigerant charge and airflow measurement when installers have used the alternate charging and airflow measurement procedure described in ACM RD-2005, Section RD3. This approval will be on the condition that installers provide a signed agreement to the builder with a copy to the building department to return to correct refrigerant charge and airflow if the HERS rater determines at a later time when the outside temperature is above 55°F that correction is necessary.~~

[Note: The following section has been consolidated in the Glossary, Reference Appendix JA1]

~~*7.9 Definitions of Terms Used In This Chapter*~~

~~The following definitions apply to the procedures described in this document.~~

~~**Building Owner** means the owner of the dwelling unit.~~

~~**Builder** means the general contractor responsible for construction.~~

~~**Building Department** means the city, county or state agency responsible for approving the plans, issuing a building permit and approving occupancy of the dwelling unit.~~

~~**Dwelling Unit** means the building for single-family residences or each dwelling unit within a multifamily building project.~~

~~**HERS Provider** means an organization that the Commission has approved to administer a home energy rating system program, certify raters and maintain quality control over field verification and diagnostic testing required for compliance with the Energy Efficiency Standards.~~

~~**HERS Rater** means a person certified by a Commission approved HERS Provider to perform the field verification and diagnostic testing required for demonstrating compliance with the standards.~~

~~**Independent Entity** means having no financial interest in, and not advocating or recommending the use of any product or service as a means of gaining increased business with, firms or persons specified in Section 1673(i) of the California Home Energy Rating System Program regulations (California Code of Regulations, Title 20, Division 2, Chapter 4, Article 8). **Financial Interest** means an ownership interest,~~

~~debt agreement, or employer/employee relationship. Financial interest does not include ownership of less than 5% of the outstanding equity securities of a publicly traded corporation.~~

~~NOTE: The definitions of "independent entity" and "financial interest," together with Section 1673(i), prohibit conflicts of interest between providers and raters, or between providers/raters and builders/subcontractors.~~

~~**Documentation Author** means the person responsible for completing the compliance documentation that demonstrates whether a building complies with the standards. Compliance documentation requirements are defined in the Residential Manual.~~

~~**Model** means a floor plan and house design that is repeated throughout a subdivision or within a multi-family building. To be considered the same model, dwelling units shall be in the same subdivision or multi-family housing development and have the same energy designs and features, including the same floor area and volume, for each dwelling unit, as shown on the CF-1R. For multi-family buildings, variations in exterior surface areas caused by location within the building shall not cause dwelling units to be considered a different model.~~

~~**Certificate of Field Verification and Diagnostic Testing (CF-4R)** means a document with information required by the Commission that is prepared by the HERS rater to certify that measures requiring field verification and diagnostic testing comply with the requirements.~~

~~**Certificate of Compliance (CF-1R)** means a document with information required by the Commission that is prepared by the Documentation Author that indicates whether the building includes measures that require field verification and diagnostic testing.~~

~~**Installation Certificate (CF-6R)** means a document with information required by the Commission that is prepared by the builder or installer verifying that the measure was installed to meet the requirements of the standards.~~

Residential Appendix RA3 – 2008

Appendix RA3 – Residential Field Verification and Diagnostic Test Procedures

Table of Contents:

RA3.1 Procedures for Field Verification and Diagnostic Testing of Air Distribution Systems 2

RA3.2 Procedures for Determining Refrigerant Charge for Split System Space Cooling Systems Without a Charge Indicator Light 10

RA3.3 Field Verification and Diagnostic Testing of Forced Air System Fan Flow and Air Handler Fan Watt Draw 23

RA3.4 Procedures for Verifying the Presence of a Charge Indicator Light or High Energy Efficiency Ratio Equipment 28

RA3.5 High Quality Batt Insulation Installation Procedures 30

RA3.6 Field Verification and Diagnostic Testing of Photovoltaic Systems 37

RA3.1 Procedures for Field Verification and Diagnostic Testing of Air Distribution Systems

RA3.1.1 Purpose and Scope

~~ACM RC-2005~~RA3.1 contains procedures for measuring the air leakage in forced air distribution systems as well as procedures for verifying duct location, surface area and R-value.

~~ACM RC-2005~~RA3.1 applies to air distribution systems in both new and existing low-rise residential buildings.

~~ACM RC-2005~~RA3.1 provides required procedures for installers, HERS raters and others who need to perform field verification ~~and diagnostic testing to verify~~of the efficiency of air distribution systems. Algorithms for determining distribution system efficiency are contained in Chapter 4 of the residential ACM Manual. Table RA3.1-1~~Table -1~~ is a summary of the tests and criteria included in ~~ACM RC-2005~~RA3.1.

Table ~~RC~~RA3.1-1 – Summary of Diagnostic Measurements

Diagnostic	Description	Procedure
Supply Duct Location, Surface Area and R-factor	Verify that duct system was installed according to the design, including location, size and length of ducts, duct insulation R-value, and installation of buried ducts.	~~RF4.3~~RA3.1.4.1 Diagnostic Supply Duct Location, Surface Area and R-value
Duct Leakage	Verify that duct leakage is less than the criteria or in the case of existing ducts that all accessible leaks have been sealed.	Diagnostic Duct Leakage~~Diagnostic Duct Leakage~~

RA3.1.2 Instrumentation Specifications

The instrumentation for the air distribution diagnostic measurements shall conform to the following specifications:

RA3.1.2.1 Pressure Measurements

All pressure measurements shall be measured with measurement systems (i.e. sensor plus data acquisition system) having an accuracy of ± 0.2 Pa. All pressure measurements within the duct system shall be made with static pressure probes~~ as specified by~~, Dwyer A303 or equivalent.

The supply plenum pressure shall be taken at the ~~measurement equipment manufacturer.~~following location.

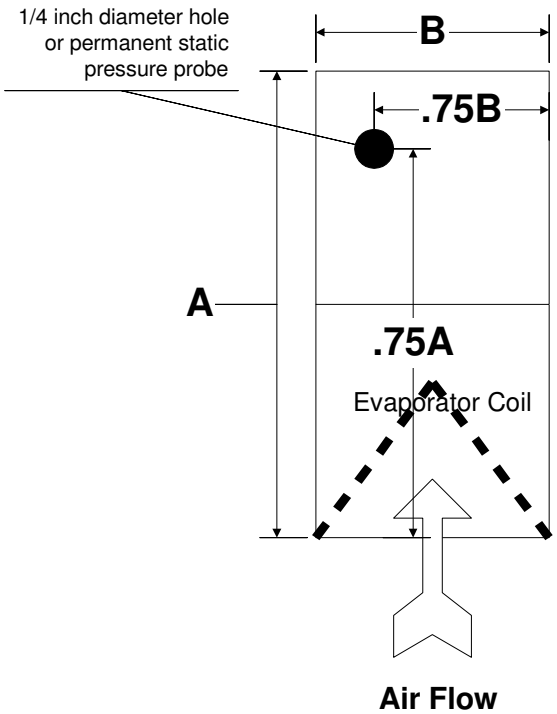

~~RC~~This location can be in any one of the four sides of the coil box/supply plenum.

This location shall have a 1/4" diameter hole or a permanently affixed static pressure probe. The location shall be labeled "Title 24 – Supply Pressure Measurement Location" in at least 12-point type.

RA3.1.2.2 Duct Leakage Measurements

The measurement of air-flows during duct leakage testing shall have an accuracy of ±3% of measured flow using digital gauges.

RA3.1.2.3 Calibration

All instrumentation used for duct leakage diagnostic measurements shall be calibrated according to the manufacturer's calibration procedure to conform to the above accuracy requirement. All testers performing diagnostic tests shall obtain evidence from the manufacturer that the equipment meets the accuracy specifications. The evidence shall include equipment model, serial number, the name and signature of the person of the test laboratory verifying the accuracy, and the instrument accuracy. All diagnostic testing equipment is subject to re-calibration when the period of the manufacturer's guaranteed accuracy expires.

RA3.1.3 Apparatus

RA3.1.3.1 Duct Pressurization

The apparatus for fan pressurization duct leakage measurements shall consist of a duct pressurization and flow measurement device meeting the specifications in Section ~~RC~~RA3.1.2.

RA3.1.3.2 Duct Leakage to Outside (Existing Duct Systems)

The apparatus for measuring duct leakage to outside shall include a fan that is capable of maintaining the pressure within the conditioned spaces in the house at 25 Pa relative to the outdoors. The fan most commonly used for this purpose is known as a "blower door"~~,~~ and is typically installed within a temporary seal of an open exterior doorway.

RA3.1.3.3 Smoke-Test of Accessible-Duct Sealing (Existing Duct Systems)

The apparatus for determining leakage in and verifying sealing of all accessible ducts shall also include means for introducing controllable amounts of non-toxic visual smoke into the duct pressurization apparatus for identifying leaks in accessible portions of the duct system. Adequate smoke shall be used to assure that any accessible leaks will emit visibly identifiable smoke.

RA3.1.4 Procedures

This section describes the procedures ~~that may be~~ used to verify diagnostic inputs for the calculation of improved duct efficiency.

RA3.1.4.1 Diagnostic Supply Duct Location, Surface Area and R-value

The performance calculations in the Residential ACM ~~R4~~Manual, Section 4.8, allow credit for duct systems that are designed to be in advantageous locations~~, with~~ that have reduced supply duct surface areas and/or that have higher than default R-values. Compliance credit may be taken for one or more of these duct system improvements in any combination. The procedure in this section is used to verify that the duct system is installed according to the design and meets the requirements for compliance credit.

RA3.1.4.1.1 Duct System Design Requirements

The design shall show the location of equipment and all supply and return registers. The size, R-value, and location of each duct segment shall be shown in the design drawing, which shall be cross referenced to the ~~Supply Duct System Details~~supply duct details report in the ~~CF1-R~~Certificate of Compliance. For ducts buried in attic insulation, the portion in contact with the ceiling or deeply buried shall be shown and the design shall include provisions for ducts crossing each other, interacting with the structure, and changing vertical location to connect with elevated equipment or registers as required. Credit shall be allowed for buried ducts only in areas where the ceiling is level and there is at least 6 inches of space between the outer jacket of the installed duct and the roof sheathing above.

RA3.1.4.1.2 Verifying the Duct System Installation

The location of all supply and return registers shall be verified from an inspection of the interior of the dwelling unit. The location of the equipment and the size, R-value, and location of each duct segment shall be verified by observation in the spaces where they are located. Deviations from the design shall not be allowed.

RA3.1.4.1.3 Verification for Ducts Buried in Attic Insulation

The procedure of ~~RC4.2.2~~RA3.1.4.3 shall be carried out prior to covering the ducts with insulation. Ducts to be buried shall be insulated to R4.2 or greater. In addition ducts designed to be in contact with the ceiling shall be in continuous contact with the ceiling drywall or ceiling structure not more ~~that~~ than 3.5 inches from the ceiling drywall. A sign must be hung near the attic access reading "Caution: Buried Ducts. Markers indicate location of buried ducts." All ducts which will be completely buried shall have vertical markers which will be visible after insulation installation at not more than every 8 feet of duct length and at the beginning and end of each duct run.

After the ceiling insulation is installed, the R-value and type of insulation listed on the Duct System Details shall be verified. Ceiling insulation shall be level and uniform, mounding at ducts is not allowed.

RA3.1.4.2 ~~System~~Total Fan Flow

For the purpose of establishing duct leakage criteria, the total fan flow shall be calculated using ~~RC~~RA3.1.4.2.1, ~~RC~~RA3.1.4.2.2 or ~~RC4.2.3~~ RA3.1.4.2.3.

RA3.1.4.2.1~~RC~~ Default System Fan Flow

Default system fan flow may be used only for homes where the duct system is being tested before the air conditioning and heating system is installed and the equipment specification is not known. For heating only systems the default fan flow shall be 0.5 CFM/~~CFA~~ Conditioned Floor Area (Sq. Ft.). For systems with cooling,

the default fan flow shall be 400 CFM per nominal ton of rated total cooling capacity ~~calculated by the ACM using the procedure in ACM RF-2005~~ or the heating only value, whichever is greater.

RA3.1.4.2.2 Nominal System Fan Flow

For heating only systems the fan flow shall be 21.7 CFM x Heating Capacity in thousands of Btu/hr. For systems with cooling, the fan flow shall be 400 CFM per nominal ton of rated cooling capacity at ARI conditions or the heating only value, whichever is greater.

RA3.1.4.2.3~~RC~~ Measured System Fan Flow

The fan flow shall be ~~shall be~~ as measured according to ~~the~~a procedure in ~~ACM RF-2005.~~Section RA3.3.3

RA3.1.4.3 Diagnostic Duct Leakage

Diagnostic duct leakage measurement is used by installers and raters to verify that total leakage meets the criteria for any sealed duct system specified in the compliance documents. Diagnostic Duct Leakage from Fan Pressurization of Ducts (Section RA3.1.4.3.1) is the only procedure that may be used by a HERS rater to verify duct sealing in a new home. ~~Table RC-2~~Table RA3.1-2~~Table 2~~ shows the leakage criteria and test procedures that may be used to demonstrate compliance. ~~In addition to the minimum tests shown, existing duct systems may be tested to show they comply with the criteria for new duct systems.~~

Table ~~RC-2~~RA3.1-2 Duct Leakage Tests

Case	User and Application	Leakage criteria, % of total fan flow	Procedure
Sealed and tested new duct systems	Installer Testing at Final HERS Rater Testing	6%	~~RC~~RA3.1.4.3.1
	Installer Testing at Rough- in, Air Handling Unit Installed	6% Installer Inspection at Final	~~RC~~RA3.1.4.3.2 RA3.1 ~~RC~~.4.3.2.~~3~~1
	Installer Testing at Rough-in, Air Handling Unit Not Installed	4% Installer Inspection at Final	~~RC~~RA3.1.4.3.2~~.2~~ ~~RC~~ RA3.1.4.3.2.~~3~~2
~~Sealed and tested altered existing duct system~~Ducts in conditioned space	Installer Testing HERS Rater Testing	~~15% Total Duct~~25 CFM Leakage to Outside	~~RC~~RA3.1.4.3.~~1~~3
Sealed and tested altered existing duct systems	Installer Testing HERS Rater Testing	~~10%~~15% Total Duct Leakage ~~to Outside~~	~~RC~~RA3.1.4.3.~~3.~~1
	Installer Testing ~~and Inspection~~ HERS Rater Testing ~~and Verification~~	~~60% Reduction in~~10% Leakage ~~and Inspection and Smoke Test~~to Outside	~~RC4~~RA3.1.4.4.3.4 ~~RC4.3.6 and RC4.3.7~~
	Installer Testing and Inspection HERS Rater Testing and Verification	~~Fails~~60% Reduction in Leakage ~~Test but All Accessible Ducts are Sealed~~ and Inspection and Smoke Test ~~with 100% Verification~~	~~RC4~~RA3.1.3.~~5~~4 ~~RC~~ RA3.1.4.4.3.6 ~~and RC~~, RA3.1.4.3.7
	Installer Testing and Inspection HERS Rater Testing and Verification	Fails Leakage Test but All Accessible Ducts are Sealed Inspection and Smoke Test with 100% Verification	RA3.1.3.5 RA3.1.4.3.6, RA3.1.4.3.7

RA3.1.4.3.1 Diagnostic Duct Leakage from Fan Pressurization of Ducts

The objective of this procedure is for an installer to determine or a rater to verify the total leakage of a new or altered duct system. The total duct leakage shall be determined by pressurizing ~~both~~the entire duct system to + 25 Pa measured at the supply ~~and return ducts to a pressure difference of 25 Pascals.~~ plenum with respect to outside. The following procedure shall be used for the fan pressurization tests:

1. Verify that the air handler, supply and return plenums and all the connectors, transition pieces, duct boots and registers are installed. The entire duct system shall be included in the total leakage test.
2. For newly installed or altered ducts, verify that cloth backed rubber adhesive duct tape has not been used and if a platform or other building cavity used to house the air distribution system has been newly installed or altered, it contains a duct or is ducted with duct board or sheet metal.
3. Seal all the supply and return registers except for one return register or the system fan access.
4. Attach the fan ~~flowmeter~~flowmeter device to the duct system at the unsealed register or access door.
5. Install a static pressure probe ~~at a~~ in the supply plenum.
6. Adjust the fan flowmeter to produce a + 25 Pa~~scal~~ (0.1 in water) pressure ~~difference between~~ at the supply ~~duct and~~plenum with respect to the outside or with respect to the building space with the entry door open to the outside.
7. Record the flow through the ~~flowmeter,~~flowmeter; this is the leakage flow at 25 Pa~~scals~~.
8. Divide the leakage flow by the total fan flow determined by the procedure in Section RA3.1.4.2 and convert to a percentage. If the leakage flow percentage is less than the criteria from ~~Table RF-2~~ Table RA3.1-2~~Table 2~~ the system passes.

When the diagnostic leakage test is performed and the measured total duct leakage is less than 6% of the total fan flow, the duct leakage factor shall be 0.96 as shown in Residential ACM Manual, Table R~~-C3~~3-30 Duct/Air Handler Leakage Factors.

RA3.1.4.3.2 Diagnostic Duct Leakage at Rough-in Construction Stage

Installers may determine duct leakage in new construction by using diagnostic measurements at the rough-in building construction stage prior to installation of the interior finishing. When using this measurement technique, the installer shall complete additional inspection (as described in section ~~RC~~RA3.1.4.3.2.3) of duct integrity after the finishing wall has been installed. In addition, after the finishing wall is installed, spaces between the register boots and the wallboard shall be sealed. Cloth backed rubber adhesive duct tapes shall not be used to seal the space between the register boot and the wall board.

The duct leakage measurement at rough-in construction stage shall be performed using a fan pressurization device. The duct leakage shall be determined by pressurizing both the supply and return ducts to 25 Pa. The following procedure (either ~~RC~~RA3.1.4.3.2.1 or ~~RC~~RA3.1.4.3.2.2) shall be used:

RA3.1.4.3.2.1 ~~For~~ Ducts with the Air Handling Unit Installed and Connected:

For total leakage:

1. Verify that supply and return plenums and all the connectors, transition pieces and duct boots have been installed. If a platform or other building cavity is used to house the air distribution system, it shall contain a duct, and all return connectors and transition parts shall be installed and sealed. The platform, duct and connectors shall be included in the total leakage test. All joints shall be inspected to ensure that no cloth backed rubber adhesive duct tape is used.
2. Seal all the supply duct boots and return boxes except for one return duct box.
3. Attach the fan flowmeter device at the unsealed duct box.
4. ~~Insert~~Install a static pressure probe ~~at one of~~ in the ~~sealed~~ supply ~~duct boots~~plenum.
5. Adjust the fan flowmeter to ~~maintain~~produce a + 25 Pa-(0.1 in water) ~~between~~ pressure at the ~~duct system and outside~~supply plenum with respect to the outside or with respect to the building space with the entry door open to the outside.
6. Record the flow through the flowmeter, this is the leakage flow at 25 Pa~~scals~~.
7. Divide the leakage flow by the total fan flow determined by the procedure in Section RA3.1.4.2 and convert to a percentage. If the leakage flow percentage is less than the criteria from ~~Table RC2~~Table RA3.1-2~~Table 2~~ the system passes.~~.~~

RA3.1.4.3.2.2 *~~For~~ Ducts with Air Handling Unit Not Yet Installed:*

For total leakage:

1. Verify that all the connectors, transition pieces and duct boots have been installed. If a platform or other building cavity is used to house the air distribution system, it must contain a duct, and all return connectors and transition parts shall be installed and sealed. The platform, duct and connectors shall be included in the total leakage test.
2. Use a duct connector to connect the supply and/or return duct box to the fan flowmeter. Supply and return leaks may be tested separately. ~~If there is only one return register, the supply and return leaks shall be tested at the same time.~~
3. Seal all the supply duct boots and/or return boxes except for one supply or return duct box.
4. Attach the fan flowmeter device at the unsealed duct box.
5. Insert a static pressure probe at ~~one of~~ the ~~sealed~~ supply ~~duct boots~~plenum.
6. Adjust the fan flowmeter to ~~maintain~~produce a + 25 Pa-(0.1 in water) ~~between~~pressure at the supply plenum with respect to the outside or with respect to the building ~~conditioned~~ space ~~and the duct system~~with the entry door open to the outside.
7. Record the flow through the flowmeter~~,~~; this is the leakage flow at 25 Pa~~scals~~.
8. If the supply and return ducts are tested separately, repeat items 4 through 6 with the flow meter attached to the unsealed return box and the static pressure probe in the return plenum, then add the two leakage rates together to get a total leakage flow.
9. Divide the leakage flow by the total fan flow determined by the procedure in Section RA3.1.4.2 and convert to a percentage. If the leakage flow percentage is less than the criteria from ~~Table RC-2~~ Table RA3.1-2~~Table 2~~ the system passes.

RA3.1.4.3.3 Installer Visual Inspection at Final Construction Stage

After installing the interior finishing wall and verifying that one of the above rough-in tests was completed, the following procedure shall be used:

1. Remove at least one supply and one return register, and verify that the spaces between the register boot and the interior finishing wall are properly sealed.
2. If the house rough-in duct leakage test was conducted without an air handler installed, inspect the connection points between the air handler and the supply and return plenums to verify that the connection points are properly sealed.
3. Inspect all joints to ensure that no cloth backed rubber adhesive duct tape is used.

RA3.1.4.3.4 Duct Leakage to Outside from Fan Pressurization of Ducts

The objective of this test ~~for altered existing duct systems only~~ is to ~~provide an alternate measurement of~~ determine the duct leakage to ~~outdoors. The~~ outside. This measurement is used to verify that duct systems are entirely located within conditioned space. The procedure is also used to provide an alternate leakage measurement where it is likely that some of the total duct leakage ~~to outdoors~~is to within the conditioned space. The duct leakage to outside shall be determined by pressurizing the ducts and the conditioned space~~s~~ of the house to 25 Pa. with respect to outside. The following procedure shall be used for the fan pressurization test of leakage to outside:

1. Seal all the supply and return registers except one return register or the fan access door.
2. Attach the fan flowmeter device to the duct system at the unsealed register or access door.
3. Install a static pressure probe at the supply plenum.
4. Attach a blower door to an external doorway.

5. If any ducts are located in an unconditioned basement, all doors or accesses between the conditioned space and the basement shall be closed, and at least one operable door or window (if it exists) between the basement and outside shall be open~~ed~~ during the test.
6. If the ducts are located in a conditioned basement, any door between the basement and the remaining conditioned space shall be open~~ed~~, and any basement doors or windows to outside must be closed during the test.
7. Adjust the blower door fan to provide + 25 Pa ~~[0.1 inches of water]~~ pressure ~~difference between~~ in the conditioned space ~~and~~ with respect to outside.
8. Adjust the fan/flowmeter to maintain zero pressure (±0.5Pa ~~[±0.002 inches water]~~) between the ducts and the conditioned space, and adjust the blower door fan to maintain + 25 Pa ~~(±0.5Pa) [0.1 inch water (±0.002 inches water)] between~~ pressure in the conditioned space ~~and~~ with respect to outside. This step may require several iterations.
9. Record the flow through the flowmeter (Q_{25} ~~[Q0.1]~~); this is the duct leakage at 25 Pa ~~[0.1 inch water]~~. To verify ducts in conditioned space compare this flow to the criterion
10. ~~Divide~~Where the criteria is a percentage of total flow, divide the leakage flow by the total fan flow determined by the procedure in Section RA3.1.4.2 and convert to a percentage. If the leakage flow percentage is less than the criteria from ~~Table RC-2~~ Table RA3.1-2~~Table RA3.1-2~~ the system passes.

RA3.1.4.3.5 Leakage ~~Improvement~~Reduction from Fan Pressurization of Ducts

For altered existing duct systems ~~which~~that do not pass the Total Leakage (~~RC~~RA3.1.4.3.1) or Leakage to Outside (~~RC~~RA3.1.4.3.3) tests, the objective of this test is to show that the original leakage is reduced through duct sealing as specified in ~~Table RC-2~~ Table RA3.1-2~~Table RA3.1-2~~. The following procedure shall be used:~~.~~

1. Use the procedure in ~~RC~~RA3.1.4.3.1 to measure the leakage before commencing duct sealing.
2. After sealing is complete use the same procedure to measure the leakage after duct sealing.
3. Subtract the sealed leakage from the original leakage and divide the remainder by the original leakage. If the leakage reduction is 60~~%~~ percent or greater of the original leakage, the system passes.
4. Complete the Smoke Test specified in ~~RC4~~RA3.1.4.3.9

.

5. Complete the Visual Inspection specified in ~~RC~~RA3.1.4.3.10.

RA3.1.4.3.6 Sealing of All Accessible Leaks

For altered existing duct systems that do not pass any of the Total Leakage (~~RC~~RA3.1.4.3.1), Leakage to Outside (~~RC~~RA3.1.4.3.3) or Leakage Improvement (~~RC~~RA3.1.4.3.4) tests, the objective of this test is to show that all accessible leaks are sealed ~~and that excessively damaged ducts have been replaced~~. The following procedure shall be used:

1. ~~Complete each of~~At a minimum, complete the procedure in RA3.1.4.3.1 to measure the leakage ~~tests~~

before commencing duct sealing.

2. Seal all accessible ducts.
3. After sealing is complete use the same procedure to measure the leakage after duct sealing.4. Complete the Smoke Test as specified in ~~RC~~RA3.1.4.3.9.
4. ~~3~~5. Complete the Visual Inspection as specified in ~~RC~~RA3.1.4.3.10.
5. ~~4~~6. Install the required label on the system stating that the system fails the leakage tests.

RA3.1.4.3.7~~RC~~ Smoke-Test of Accessible-Duct Sealing

For altered existing ducts that fail the leakage tests, the objective of the smoke test is to confirm that all accessible leaks have been sealed. The following procedure shall be used:

1. Inject either theatrical or other non-toxic smoke into a fan pressurization device that is maintaining a duct pressure difference of 25 Pa relative to the duct surroundings, with all grilles and registers in the duct system sealed.
2. Visually inspect all accessible portions of the duct system during smoke injection.
3. The system shall pass the test if either of the following conditions is met:
   i. No visible smoke exits the accessible portions of the duct system.; or
   ii. Smoke only emanates from the ~~portion of the HVAC equipment containing the~~ furnace ~~vestibule~~cabinet which is gasketed and sealed by the manufacturer ~~rather than~~and no visible smoke exits from the ~~ducts~~accessible portions of the duct system.

RA3.1.4.3.8 Visual Inspection of Accessible Duct Sealing

For altered existing ducts that fail the leakage tests, the objective of this inspection in conjunction with the smoke test (~~RC~~RA3.1.4.3.9) is to confirm that all accessible leaks have been sealed~~ and that excessively damaged ducts have been replaced~~. The following procedure shall be used:

1. Visually inspect to verify that the following locations have been sealed:
2. Connections to plenums and other connections to the forced air unit
3. Refrigerant line and other penetrations into the forced air unit
4. Air handler door panel (do not use permanent sealing material, metal tape is acceptable)
5. Register boots sealed to surrounding material
6. Connections between lengths of duct, as well as connections to takeoffs, wyes, tees, and splitter boxes.

RA3.1.4.3.9 Verified Low Leakage Ducts ~~that are considered to be excessively damaged are:~~ in Conditioned Space

- ~~Flex~~When ducts ~~with the vapor barrier split or cracked with a total linear split or crack length greater than 12 inches~~
- ~~Crushed ducts where cross-sectional area~~are located in conditioned space, additional credit is ~~reduced by 30% or more~~
- ~~Metal ducts with rust or corrosion resulting in leaks greater than 2 inches in any dimension~~
- available for Low Leakage Ducts~~ that have been subject~~, if duct leakage to outside equal to or less than 25 cfm when measured in accordance with Section RA3.1.4.3.3. The home must also be qualified to ~~animal infestation resulting in leaks greater than 2 inches~~ receive the credit for verified ducts in ~~any dimension~~

conditioned space. The ACM ~~RD-2005~~credit for Low Leakage Ducts in Conditioned Space is shown on Table R3-30 of the Residential ACM.

RA3.1.4.3.10~~Appendix RD –~~ Verified Low Leakage Air Handler with Sealed and Tested Duct System

An additional credit is available for verified low leakage ducts if a Low Leakage Air Handler is installed The low leakage air handler cabinet (furnace or heat pump fan and inside coil) must be certified to the Commission to leak 2 percent or less of its nominal air conditioning cfm delivery when pressurized to 1-inch water gauge with all present air inlets, air outlets, and condensate drain port(s) sealed. The air handler must be connected to a Sealed and Tested New Duct System to receive the credit.

The ACM allows the duct efficiency calculation to use the actual measured duct leakage if it is equal to or less than 6% of airflow.

RA3.2 Procedures for Determining Refrigerant Charge for Split System Space Cooling Systems ~~without Thermostatic Expansion Valves~~Without a Charge Indicator Light

RA3.2.1 Purpose and Scope

The purpose of this procedure is to determine and verify that residential split system space cooling systems and heat pumps have the required refrigerant charge and that the metering device is working as designed. The procedures only apply to ducted split system central air conditioners and ducted split system central heat pumps ~~that do not have thermostatic expansion valves (TXVs)~~. The procedures do not apply to packaged systems. For dwelling units with multiple split systems or heat pumps, the procedure shall be applied to each system separately.

The procedures detailed in ~~ACM RD-2005~~Section RA3.2 are ~~intended~~ to be used after the HVAC installer has installed and charged the air conditioner or heat pump system in accordance with the manufacturer's instructions and specifications ~~for the specific model equipment installed.~~ . The installer shall certify to the builder, building official and HERS rater that he/she has followed the manufacturer's instructions and specifications prior to proceeding with the procedures in this appendix.

~~AACM RD-2005~~Appendix RA3.2 defines two procedures, the Standard Charge Measurement Procedure in Section ~~RD~~RA3.2.2 and the Alternate Charge Measurement Procedure in Section ~~RD~~RA3.2.3. The ~~Standard~~standard procedure shall be used when the outdoor air temperature is 55°F or above and shall always be used for HERS rater verification. HVAC installers who must complete system installation when the outdoor temperature is below 55°F shall use the ~~Alternate~~alternate procedure.

The following sections document the instrumentation needed, the required instrumentation calibration, the measurement procedure, and the calculations required for each procedure. ~~Note: Wherever thermocouples appear in this document, thermisters can be used instead with the same requirements applying to thermisters as to thermocouples.~~

The reference method algorithms adjust (improve) the efficiency of split system air conditioners and heat pumps when they are diagnostically tested to have the correct refrigerant charge ~~or when field verification indicates that a TXV has been installed~~and the metering device is operating properly. Table RA3.2-1 summarizes the algorithms that are affected by refrigerant charge testing ~~or field verification of a TXV.~~

.

Table ~~RD~~RA3.2-1 – Summary of Diagnostic Measurements

Input to the Algorithms	Variables and Equation Reference	Description	Standard Design Value	Proposed Design	
				Default Value	Procedure
Cooling System Refrigerant Charge and Metering	~~F_{TXV}~~ F_{chg} (RACM Manual Eqs. R3-40 and R3-41)	~~F_{TXV}~~F_{CIL} takes on a value of 0.96 when the system has been diagnostically tested for the correct refrigerant charge. Otherwise, ~~F_{TXV}~~F_{CIL} has a value of 0.90.	Split systems are assumed to have refrigerant charge testing or a ~~TXV,~~Charge Indicator Light when required by Package D.	No refrigerant charge testing or ~~TXV~~Charge Indicator Light.	~~RD~~RA3.2.2 or ~~RD3~~RA3.2.3

Note that ~~a prerequisite for~~ diagnostically testing the refrigerant charge ~~is to verify that there is adequate~~requires a minimum level of airflow ~~over~~across the evaporator coil~~. This diagnostic test is described~~, as defined in ~~ACM RE-2005.~~ RA3.2.2.6.

RA3.2.2 Standard Charge Measurement Procedure

This section specifies the Standard charge measurement procedure. Under this procedure, required refrigerant charge is calculated using the Superheat Charging Method for Fixed Metering Devices and the Subcooling Charging Method for TXVs and EXVs. The method also checks airflow across the evaporator coil to determine whether the charge test is valid using the Temperature Split Method~~ or the air flow~~. The measurement methods in ~~ACM RE-2005.~~

RA3.3 may be substituted for the Temperature Split Method, however the Temperature Split Method may not be substituted for the measurement methods in RA3.3.

The ~~Standard~~standard procedure detailed in this section shall be completed when the outdoor temperature is 55º F or higher after the HVAC installer has installed and charged the system in accordance with the manufacturer's specifications. If the outdoor temperature is between 55º F and 65º F the return dry bulb temperature shall be maintained above 70º F during the test. All HERS rater verifications are required to use this ~~Standard~~standard procedure.

RA3.2.2.1 Minimum Qualifications for this Procedure

Persons carrying out this procedure shall be qualified to perform the following:

- Obtain accurate pressure/temperature readings from refrigeration ~~manifold~~ gauges.
- Obtain accurate temperature readings from electronic thermometer and ~~thermocouple set up~~temperature sensors.
- Check calibration of refrigerant gauges using a known reference pressure~~ and~~
- Check calibration of electronic thermometer~~/thermocouple set up~~ and temperature sensors using a known reference temperature.
- Check calibration of electronic temperature thermometer and pipe temperature sensors using a pipe at a known reference temperature in a surrounding atmosphere at least 40ºF different from the pipe temperature.
- Determine best location for temperature measurements in duct~~ing~~ system and on refrigerant ~~line set~~lines.
- Calculate the measured superheat and temperature split.
- Determine the ~~correct level of~~ required superheat and temperature split~~ required~~, based on the conditions present at the time of the test.
- Determine if measured values are reasonable.

RA3.2.2.2 Instrumentation Specifications

Instrumentation for the procedures described in this section shall conform to the following specifications:

RA3.2.2.2.1~~RD~~ Digital Thermometer

Digital thermometer shall have ~~thermocouple compatibility (type K and J) and~~ dual channel capability in Celsius or Fahrenheit readout with:

- Accuracy: ±(0.1% of reading + 1.3º F).
- Resolution: 0.2º F.

~~RA4.1.4.2RD2.2.2 Thermocouples~~

RA3.2.2.2.2 Temperature Sensors and Temperature Measurement Access Holes

Measurements require ~~five (5) heavy duty beaded low-mass wire thermocouples and~~ four (4) temperature sensors with a response time that produces the accuracy specified in Section RA3.2.2.1 within 15 seconds of immersion in a bath at least 40º F different from the surrounding conditions

Measurements require one (1) cotton wick for measuring wet-bulb temperatures.

~~RD~~Measurements require at two (2) pipe temperature sensors that produce the accuracy specified in Section RA3.2.2.1 within 15 seconds of being applied to a pipe at least 40º F different from the surrounding conditions.

There shall be two labeled temperature measurement access holes, one in the supply plenum and one in the return plenum. The temperature measurements shall be taken at the following locations:

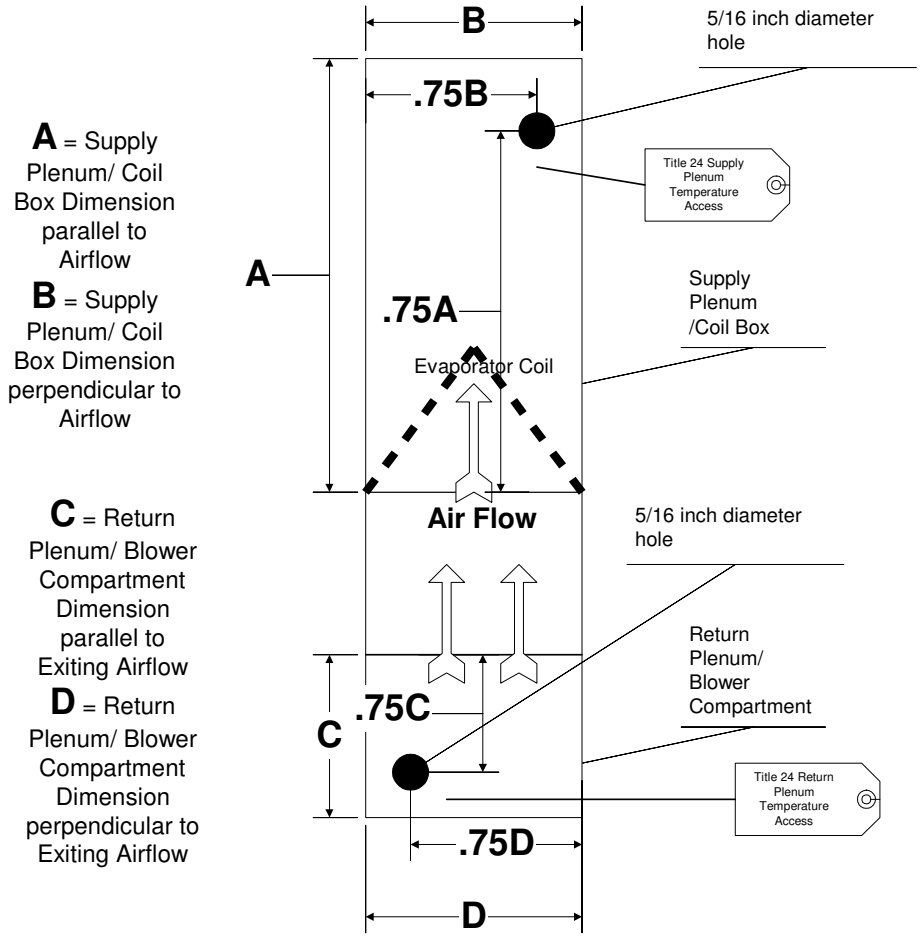

Each location shall have a 5/16" diameter hole. The supply location shall be labeled "Title 24 – Supply Temperature Access" in at least 12-point type. The return location shall be labeled "Title 24 – Return Temperature Access" in at least 12-point type. These locations can be in any one of the four sides of the plenums.

~~Refrigerant Manifold Gauge Set~~

RA3.2.2.3~~–~~ Refrigerant Guages and Saturation Temperature Measurement Sensors

A ~~standard multiport~~ refrigerant ~~manifold~~ gauge with an accuracy of ~~plus or minus~~ ±3% shall be used. As an alternative, two saturation temperature measurement sensors (sensors) may be placed in a manner and location determined by the equipment manufacturer as measuring the saturation temperature of the refrigerant in the evaporator coil and in the condenser coil within 1.3 ºF. These sensors shall be permanently mounted and have standard temperature sensor mini plugs accessible to the installing technician and the HERS rater without changing the airflow through the condenser coil. Other saturation temperature measurement sensor instrumentation methodologies shall be allowed if the specifications for the methodologies are approved by the Executive Director.

RA3.2.2.4 Calibration

The accuracy of instrumentation shall be maintained using the following procedures. A sticker with the calibration check date shall be affixed to each instrument calibrated.

RA3.2.2.4.1 Thermometer/~~Thermocouple~~ and Temperature Sensor Field Calibration Procedure

Thermometers/~~thermocouples~~temperature sensors shall be calibrated monthly to ensure that they are reading accurate temperatures.

The following procedure shall be used to check thermometer/~~thermocouple~~temperature sensor calibration:

1. Fill an insulated cup (foam) with crushed ice. The ice shall completely fill the cup. Add water to fill the cup.
2. Insert two ~~thermocouples~~sensors into the center of the ice bath and attach them to the digital thermometer.
3. Let the temperatures stabilize. The temperatures shall be 32°F (+/- 1°F). If the temperature is off by more than 1°F make corrections according to the manufacturer's instructions. Any ~~thermocouples~~sensors that are off by more than ~~3~~2°F shall be replaced.
4. Switch the ~~thermocouples~~sensors and ensure that the temperatures read on ~~T1 and T2~~both channels are still within +/- 1°F of 32°F.
5. Affix sticker with calibration check date onto ~~thermocouple~~sensor.
6. Repeat the process for all ~~thermocouples.~~ sensors.

RA3.2.2.4.2 Refrigerant Gauge Field Check Procedure

Refrigerant gauges shall be checked monthly to ensure that the gauges are reading the correct pressures and corresponding temperatures. The following procedure shall be used to check gauge calibration:

1. Place a refrigerant cylinder in a stable environment and let it sit for 4 hours minimum to stabilize to the ambient conditions.
2. Attach a ~~thermocouple~~ calibrated sensor to the refrigerant cylinder using ~~duct~~ tape so that there is good contact between the cylinder and the ~~thermocouple~~sensor.
3. Insulate ~~the thermocouple~~over the sensor connection to the cylinder ~~(closed cell pipe insulation can be taped over the end of the thermocouple to provide the insulation).~~
4. Zero the low side ~~compound gauge~~and high side refrigerant gauges with all ports open to atmospheric pressure (no hoses attached).
5. Re-install the hose~~ and~~, attach the ~~low~~high side gauge to the refrigerant cylinder~~.~~, and open the valves to measure the pressure in the refrigerant cylinder.
6. Read the temperature of the ~~thermocouple~~sensor on the refrigerant cylinder.
7. Using a pressure/temperature chart for the refrigerant, look up the pressure that corresponds to the temperature measured.
8. If gauge does not read the correct pressure corresponding to the temperature, the gauge is out of calibration and needs to be replaced or returned to the manufacturer for calibration.

~~Repeat the process in steps 4 through 8 for~~9. Close the valve to the refrigerant cylinder, and bleed off a small amount of refrigerant to lower the high side ~~gauge.~~pressure to give a corresponding temperature to between 45°F and 55°F.

10. Open the valves between the high side gauge and low side gauge.
11. If the two gauges corresponding refrigerant temperatures do not read within 1°F of each other, the low side gauge is out of calibration and needs to be replaced or returned to the manufacturer for calibration
12. Affix sticker with calibration check date onto refrigerant gauge.

RA3.2.2.5 Charge Measurement

The following procedure shall be used to obtain measurements necessary to adjust required refrigerant charge as described in the following sections:

1. If the ~~condensor~~ condenser air entering temperature is less than ~~65°F~~65ºF, establish a return air dry bulb temperature sufficiently high that the return air dry bulb temperature will be not less than ~~70°F~~70ºF prior to the measurements at the end of the 15~~-~~-minute period in step 2.

2. Connect the refrigerant gauges to the service ports, taking normal precautions to not introduce air into the system.

3. Turn the cooling system on and let it run for 15 minutes to stabilize temperatures and pressures before taking any measurements. While the system is stabilizing, proceed with setting up the temperature ~~measurements~~sensors.

~~Connect the refrigerant gauge manifold to the suction line service valve.~~

4. Attach ~~a thermocouple~~one pipe temperature sensor to the suction line near the suction line service valve~~. Be sure the sensor is in direct contact with the~~ and attach one pipe temperature sensor to the liquid line near the liquid line ~~and is well insulated from air temperature.~~service valve.

5. Attach a ~~thermocouple~~temperature sensor to measure the condenser ~~(~~entering~~)~~ air dry-bulb temperature. The sensor shall be placed so that it records the average condenser air entering temperature and is shaded from direct sun.

6. Be sure that all cabinet panels that affect airflow are in place before making measurements. The ~~thermocouple~~ temperature sensors shall remain attached to the system until the final charge is determined.

8. Place wet-bulb ~~thermocouple~~temperature sensor (cotton wick) in water to ensure it is saturated when needed. **Do not get the dry-bulb ~~thermocouples~~temperature sensors wet.**

9. Insert the dry-bulb ~~thermocouple~~temperature sensor in the supply plenum at the ~~center of the airflow.~~ "Title 24 – Supply Temperature Access" detailed in Section RA3.2.2.2.2.

10. At 12 minutes, insert a dry-bulb ~~thermocouple~~temperature sensor and a wet-bulb ~~thermocouple~~temperature sensor into the return plenum at the ~~center of the airflow~~"Title 24 – Return Temperature Access" detailed in Section RA3.2.2.2.2.

11. At 15 minutes when the return plenum ~~temperatures have~~wet-bulb temperature has stabilized, using the ~~thermocouples~~temperature sensors already in place, measure and record the return (evaporator entering) air dry-bulb temperature ($T_{return, db}$) and the return (evaporator entering) air wet-bulb temperature ($T_{return, wb}$).

12. Using the dry-bulb ~~thermocouple~~temperature sensor already in place, measure and record the supply (evaporator leaving) air dry-bulb temperature ($T_{supply, db}$).

13. Using the refrigerant gauge already attached, measure and record the evaporator saturation temperature ($T_{evaporator, sat}$) from the low side gauge.

~~Using the dry-bulb thermocouple~~14. Using the refrigerant gauge already attached, measure and record the condenser saturation temperature ($T_{eondenser, sat}$) from the high side gauge.

15. Using the pipe temperature sensor already in place, measure and record the suction line temperature ($T_{suction,\ db}$).

16. Using the pipe temperature sensor already in place, measure and record the liquid line temperature (T_{liquid}).

17. Using the dry-bulb ~~thermocouple~~temperatures sensor already in place, measure and record the condenser (entering) air dry-bulb temperature ($T_{condenser, db}$).

The above measurements shall be used to adjust refrigerant charge and airflow as described in following sections.

RA3.2.2.6 Refrigerant Charge and Metering Device Calculations

~~The Superheat Charging Method is used only for non-TXV systems equipped with fixed metering devices. These include capillary tubes and piston-type metering devices.~~ The following steps describe the calculations to determine if the system meets the required refrigerant charge and metering device function using the measurements described in ~~section RD~~Section RA3.2.2.4. If a system fails, then remedial actions must be taken. If the refrigerant charge is changed and the airflow ~~has been previously~~is being tested ~~and shown to pass~~with the *Temperature Split Method*, then the airflow shall be re-tested. ~~-~~Be sure to ~~complete Steps 1 and 2 of Section RD2.4 before re-testing the airflow.~~ run the air conditioner for 15 minutes after the final adjustments before taking any measurements. Both the airflow and charge must be re-tested until they ~~both sequentially pass.~~simultaneously pass.

RA3.2.2.6.1 Fixed Metering Device Calculations

The Superheat Charging Method is used only for systems equipped with fixed metering devices. These include capillary tubes and piston-type metering devices.

1. Calculate Actual Superheat as the suction line temperature minus the evaporator saturation temperature.

$$\text{Actual Superheat} = T_{suction,\ db} - T_{evaporator,\ sat}.$$

2. Determine the Target Superheat using ~~Table RD2~~Table RA3.2-~~Table RA3.2-3~~2 using the return air wet-bulb temperature ($T_{return,\ wb}$) and condenser air dry-bulb temperature ($T_{condenser,\ db}$).

3. If a dash mark is read from Table RA3.2-2~~Table RA3.2-3~~, the target superheat is less than 5°F, then the system **does not pass** the required refrigerant charge criteria, usually because outdoor conditions are too hot and dry. One of the following ~~adjustments~~ is needed ~~until~~so a target superheat value can be obtained from Table RA3.2-2 ~~Table RA3.2-3 by~~ either 1) ~~turning~~ turn on the space heating system and/or open~~ing~~ the windows to warm up indoor temperature; or 2) retest at another time when conditions are different. ~~After adjustments, repeat~~Repeat the measurement procedure as ~~often as~~ necessary to establish the target superheat. Allow system to stabilize for 15 minutes before ~~completing the measurement procedure again~~the final measurements are taken..

4. Calculate the difference between actual superheat and target superheat (Actual Superheat - Target Superheat)

5. ~~If~~ In order to allow for inevitable differences in measurements, the Pass/Fail criteria are different for the Installer and the HERS Rater.

   ~~a)~~For the Installer, if the difference is between minus 5°F and plus 5°F, then the system **passes** the required refrigerant charge ~~criteria.~~criterion.

   ~~6. If~~ For the HERS Rater inspecting the system, if the difference is between minus 6°F and plus 6°F, then the system **passes** the required refrigerant charge criterion

6. For the Installer, if the difference is greater than plus 5°F, then the system **does not pass** the required refrigerant charge ~~criteria and the installer~~criterion and the Installer shall add refrigerant. ~~After the refrigerant has been added, turn the system on and allow it to stabilize for 15 minutes before completing the measurement procedure again.~~ Adjust refrigerant charge and ~~repeat~~check the ~~measurement procedure~~measurements as many times as necessary to pass the test. After the final adjustment has been made, allow the system to run 15 minutes before completing the final measurement procedure.

7. ~~If~~ For the Installer, if the difference is between ~~–~~minus 5°F and ~~-~~minus100°F, then the system **does not pass** the required refrigerant charge ~~criteria, the installer~~criterion, the Installer shall remove refrigerant. ~~After the refrigerant has been removed, turn the system on and allow it to stabilize for 15 minutes before completing the measurement procedure again.~~ Adjust refrigerant charge and

~~repeat~~check the ~~measurement~~ measurements as many times as necessary to pass the test. After the final adjustment has been made, allow the system to run 15 minutes before completing the final measurement procedure.

~~RA4.1.8 RD2.6 Airflow Verification~~

~~In order to have a valid charge test, the air flow shall be verified by either passing the temperature split test or by one of the three measurements in ACM RE-2005 with a measured airflow in excess of 0.033 cfm/Btu capacity rated at DOE A test conditions (400 cfm/12000 Btu) (dry coil).~~

RA3.2.2.6.2 Variable Metering Device Calculations

The Subcooling Charging Method is used only for systems equipped with variable metering devices. These include Thermostatic Expansion Valves (TXV) and Electronic Expansion Valves (EXV). Since variable metering devices are constant superheat valves, measuring the superheat determines whether they are working properly.

1. Calculate Actual Subcooling as the liquid line temperature minus the condenser saturation temperature. Actual Subcooling = $T_{liquid,} - T_{condenser, sat}$.
2. Determine the Target Subcooling specified by the manufacturer.
4. Calculate the difference between actual subcooling and target subcooling (Actual Subcooling - Target Subcooling
5. In order to allow for inevitable differences in measurements, the Pass/Fail criteria are different for the Installer and the HERS Rater.

   For the Installer, If the difference is between minus 3°F and plus 3°F, then the system **passes** the required refrigerant charge criterion.

   For the HERS Rater inspecting the system, if the difference is between minus 4°F and plus 4°F, then the system **passes** the required refrigerant charge criterion
6. For the Installer, if the difference is greater than plus 3°F, then the system **does not pass** the required refrigerant charge criterion and the Installer shall remove refrigerant. Adjust refrigerant charge and check the measurements as many times as necessary to pass the test. After the final adjustment has been made, allow the system to run 15 minutes before completing the final measurement procedure.
7. For the Installer, if the difference is between minus 3°F and minus 100°F, then the system **does not pass** the required refrigerant charge criterion, the Installer shall add refrigerant. Adjust refrigerant charge and check the measurements as many times as necessary to pass the test. After the final adjustment has been made, allow the system to run 15 minutes before completing the final measurement procedure.
8. Calculate Actual Superheat as the suction line temperature minus the evaporator saturation temperature. Actual Superheat = $T_{suction,} - T_{evaporator, sat}$.
9. If possible, determine the Superheat Range specified by the manufacturer.
10. In order to allow for inevitable differences in measurements, the Pass/Fail criteria are different for the Installer and the HERS Rater.

    For the Installer, if the superheat is within the manufacturer's superheat range, then the system **passes** the metering device criterion. If the manufacturer's specification is not available and the superheat is between 4°F and 25°F, then the system **passes** the metering device criterion.

    For the HERS Rater inspecting the system, if the superheat is between 3°F and 26°F, then the system **passes** the metering device criterion.

RA3.2.2.7 Minimum Airflow

In order to have a valid charge test, the airflow shall be verified by passing the temperature split test. Alternatively, one of the three measurements in RA3.3 may be used with a measured airflow in excess of 300 cfm/ton. The temperature split test method is designed to provide an efficient check to see if airflow is above the required minimum for a valid refrigerant charge test. The following steps describe the calculations using the measurement procedure described in ~~section RD~~Section RA3.2.2.4. If a system fails, then remedial actions must be taken. If the airflow is changed and the refrigerant charge has previously been tested~~ and shown to pass~~, then the refrigerant charge shall be re-tested. Be sure to ~~complete Steps 1 and 2 of Section RD2.4 before re-testing the refrigerant charge.~~ run the air conditioner for 15 minutes after the final adjustments before taking any measurements. Both the airflow and charge must be re-tested until they ~~both sequentially~~simultaneously pass.

1. Calculate the Actual Temperature Split as the return air dry-bulb temperature minus the supply air dry-bulb temperature. Actual Temperature Split = $T_{return, db} - T_{supply, db}$
2. Determine the Target Temperature Split from Table RA3.2-3 using the return air wet-bulb temperature ($T_{return, wb}$) and return air dry-bulb temperature ($T_{return, db}$).
3. If a dash mark is read from Table RA3.2-3 then there probably was an error in the measurements because the conditions in this part of the table would be extremely unusual. ~~-~~If this happens, re-measure the temperatures. ~~-~~If re-measurement results in a dash mark, complete one of the alternate airflow measurements in Section ~~RD3.4 below.~~RA3.3.
4. Calculate the difference between target and actual temperature split (Actual Temperature Split-Target Temperature Split).
5. In order to allow for inevitable differences in measurements, the Pass/Fail criteria are different for the Installer and the HERS Rater.

~~•~~ For the Installer, ~~criteria.~~

a) If the difference is ~~within~~ between plus 3°F and minus 3°F, then the system **passes** the adequate airflow criterion.~~repeating measurement procedure~~

b) If the difference is greater than plus 3°F, then the system **does not pass** the adequate airflow criteria and the airflow shall be increased by the installer. Increasing airflow can be accomplished by eliminating restrictions in the duct system, increasing blower speed, cleaning filters, or opening registers. After corrective measures are taken, repeat measurement procedure as often as necessary to establish adequate airflow~~ range. Allow~~. After the final adjustment, allow the system to stabilize for 15 minutes before ~~repeating measurement procedure~~taking the final measurements.

c) If the difference is between minus 3°F and minus 100°F, then the measurement procedure shall be repeated making sure that temperatures are measured ~~at the center of~~in a manner that obtains the average temperature in the airflow.

d) If the re-measured difference is between plus 3°F and minus 3°F the system **passes** the adequate airflow criteria. If the re-measured difference is between minus 3°F and minus 100°F, the system passes, but it is likely that the capacity is low on this system (it is possible, but unlikely, that airflow is higher than average).

~~RD~~For the HERS Rater inspecting the system,

a) If the difference is between plus 4°F and minus 4°F, then the system **passes** the adequate airflow criterion.

b) If the difference is between minus 4°F and minus 100°F, then the measurement procedure shall be repeated making sure that temperatures are measured in a manner that obtains the average temperature in the airflow.

c) If the re-measured difference is between plus 4°F and minus 4°F the system **passes** the adequate airflow criteria. If the re-measured difference is between minus 4°F and minus 100°F, the system passes, but it is likely that the capacity is low on this system (it is possible, but unlikely, that airflow is higher than average).

RA3.2.3 Alternate Charge Measurement Procedure

This section specifies the Alternate charge measurement procedure. Under this procedure, the required refrigerant charge is calculated using the *Weigh-In Charging Method*.

HVAC installers who must complete system installation verification when the outdoor temperature is below 55°F shall use this Alternate procedure in conjunction with installing and charging the system in accordance with the manufacturer's specifications. HERS Raters shall not use this procedure to verify compliance.

Split system air conditioners come from the factory already charged with the standard charge indicated on the name-plate. The manufacturer supplies the charge proper for the application based on their standard liquid line length. It is the responsibility of the HVAC installer to ensure that the charge is correct for each air conditioner and to adjust the charge based on liquid line ~~length~~lengths different from the manufacturer's standard.

~~RA4.1.10 RD3.1 Minimum Qualifications for this Procedure~~

~~HVAC installation technicians shall be qualified to perform the following:~~

1. ~~Transfer and recovery of refrigerant (including a valid Environmental Protection Agency (EPA) certification for transition and recovery of refrigerant).~~
2. ~~Accurately weigh the amount of refrigerant added or removed using an electronic scale.~~
3. ~~Calculate the refrigerant charge adjustment needed to compensate for non-standard lineset lengths/diameters based on the actual lineset length/diameter and the manufacturer's specifications for adjusting refrigerant charge for non-standard lineset lengths/diameters.~~

~~RA4.1.11 RD3.2 Instrumentation Specifications~~

~~The digital scale used to weigh in refrigerant must have a range of .5 oz to at least 1200 oz (75 lb.). The scale's accuracy must be ± 0.25 oz.~~

~~RA4.1.12 RD3.3 Weigh-In Method~~

~~The following procedure shall be used by the HVAC installer to charge the system with the correct refrigerant charge.~~

1. ~~Obtain manufacturer's standard liquid line length and charge adjustment for alternate liquid line lengths.~~
2. ~~Measure and record the actual liquid line length (L_{actual}).~~
3. ~~Record the manufacturer's standard liquid line length ($L_{standard}$).~~
4. ~~Calculate the difference between actual and standard liquid line lengths~~

   ~~($L_{actual} - L_{standard}$).~~
5. ~~Record the manufacturer's adjustment for liquid line length difference per foot (A_{length}).~~
6. ~~Calculate the amount of refrigerant to add or remove and document the calculations on the CF-6R.~~
7. ~~Weigh in or remove the correct amount of refrigerant~~

~~ACM RE-2005~~

~~Appendix RE –~~

Table RA3.2-2 Target Superheat (Suction Line Temperature - Evaporator Saturation Temperature)

Condenser Air Dry-Bulb Temperature (°F) ($T_{condenser, db}$)	Return Air Wet-Bulb Temperature (°F) ($T_{return, wb}$)																										
	50	51	52	53	54	55	56	57	58	59	60	61	62	63	64	65	66	67	68	69	70	71	72	73	74	75	76
55	8.8	10.1	11.5	12.8	14.2	15.6	17.1	18.5	20.0	21.5	23.1	24.6	26.2	27.8	29.4	31.0	32.4	33.8	35.1	36.4	37.7	39.0	40.2	41.5	42.7	43.9	45.0
56	8.6	9.9	11.2	12.6	14.0	15.4	16.8	18.2	19.7	21.2	22.7	24.2	25.7	27.3	28.9	30.5	31.8	33.2	34.6	35.9	37.2	38.5	39.7	41.0	42.2	43.4	44.6
57	8.3	9.6	11.0	12.3	13.7	15.1	16.5	17.9	19.4	20.8	22.3	23.8	25.3	26.8	28.3	29.9	31.3	32.6	34.0	35.3	36.7	38.0	39.2	40.5	41.7	43.0	44.2
58	7.9	9.3	10.6	12.0	13.4	14.8	16.2	17.6	19.0	20.4	21.9	23.3	24.8	26.3	27.8	29.3	30.7	32.1	33.5	34.8	36.1	37.5	38.7	40.0	41.3	42.5	43.7
59	7.5	8.9	10.2	11.6	13.0	14.4	15.8	17.2	18.6	20.0	21.4	22.9	24.3	25.7	27.2	28.7	30.1	31.5	32.9	34.3	35.6	36.9	38.3	39.5	40.8	42.1	43.3
60	7.0	8.4	9.8	11.2	12.6	14.0	15.4	16.8	18.2	19.6	21.0	22.4	23.8	25.2	26.6	28.1	29.6	31.0	32.4	33.7	35.1	36.4	37.8	39.1	40.4	41.6	42.9
61	6.5	7.9	9.3	10.7	12.1	13.5	14.9	16.3	17.7	19.1	20.5	21.9	23.3	24.7	26.1	27.5	29.0	30.4	31.8	33.2	34.6	35.9	37.3	38.6	39.9	41.2	42.4
62	6.0	7.4	8.8	10.2	11.7	13.1	14.5	15.9	17.3	18.7	20.1	21.4	22.8	24.2	25.5	27.0	28.4	29.9	31.3	32.7	34.1	35.4	36.8	38.1	39.4	40.7	42.0
63	5.3	6.8	8.3	9.7	11.1	12.6	14.0	15.4	16.8	18.2	19.6	20.9	22.3	23.6	25.0	26.4	27.8	29.3	30.7	32.2	33.6	34.9	36.3	37.7	39.0	40.3	41.6
64	-	6.1	7.6	9.1	10.6	12.0	13.5	14.9	16.3	17.7	19.0	20.4	21.7	23.1	24.4	25.8	27.3	28.7	30.2	31.6	33.0	34.4	35.8	37.2	38.5	39.9	41.2
65	-	5.4	7.0	8.5	10.0	11.5	12.9	14.3	15.8	17.1	18.5	19.9	21.2	22.5	23.8	25.2	26.7	28.2	29.7	31.1	32.5	33.9	35.3	36.7	38.1	39.4	40.8
66	-		6.3	7.8	9.3	10.8	12.3	13.8	15.2	16.6	18.0	19.3	20.7	22.0	23.2	24.6	26.1	27.6	29.1	30.6	32.0	33.4	34.9	36.3	37.6	39.0	40.4
67	-	-	5.5	7.1	8.7	10.2	11.7	13.2	14.6	16.0	17.4	18.8	20.1	21.4	22.7	24.1	25.6	27.1	28.6	30.1	31.5	33.0	34.4	35.8	37.2	38.6	39.9
68	-	-	-	6.3	8.0	9.5	11.1	12.6	14.0	15.5	16.8	18.2	19.5	20.8	22.1	23.5	25.0	26.5	28.0	29.5	31.0	32.5	33.9	35.3	36.8	38.1	39.5
69	-	-	-	5.5	7.2	8.8	10.4	11.9	13.4	14.8	16.3	17.6	19.0	20.3	21.5	22.9	24.4	26.0	27.5	29.0	30.5	32.0	33.4	34.9	36.3	37.7	39.1
70	-	-	-	-	6.4	8.1	9.7	11.2	12.7	14.2	15.7	17.0	18.4	19.7	20.9	22.3	23.9	25.4	27.0	28.5	30.0	31.5	33.0	34.4	35.9	37.3	38.7
71	-	-	-	-	5.6	7.3	8.9	10.5	12.1	13.6	15.0	16.4	17.8	19.1	20.3	21.7	23.3	24.9	26.4	28.0	29.5	31.0	32.5	34.0	35.4	36.9	38.3
72	-	-	-	-	-	6.4	8.1	9.8	11.4	12.9	14.4	15.8	17.2	18.5	19.7	21.2	22.8	24.3	25.9	27.4	29.0	30.5	32.0	33.5	35.0	36.5	37.9
73	-	-	-	-	-	5.6	7.3	9.0	10.7	12.2	13.7	15.2	16.6	17.9	19.2	20.6	22.2	23.8	25.4	26.9	28.5	30.0	31.5	33.1	34.6	36.0	37.5
74	-	-	-	-	-	-	6.5	8.2	9.9	11.5	13.1	14.5	15.9	17.3	18.6	20.0	21.6	23.2	24.8	26.4	28.0	29.5	31.1	32.6	34.1	35.6	37.1
75	-	-	-	-	-	-	5.6	7.4	9.2	10.8	12.4	13.9	15.3	16.7	18.0	19.4	21.1	22.7	24.3	25.9	27.5	29.1	30.6	32.2	33.7	35.2	36.7
76	-	-	-	-	-	-	-	6.6	8.4	10.1	11.7	13.2	14.7	16.1	17.4	18.9	20.5	22.1	23.8	25.4	27.0	28.6	30.1	31.7	33.3	34.8	36.3
77	-	-	-	-	-	-	-	5.7	7.5	9.3	11.0	12.5	14.0	15.4	16.8	18.3	20.0	21.6	23.2	24.9	26.5	28.1	29.7	31.3	32.8	34.4	36.0
78	-	-	-	-	-	-	-	-	6.7	8.5	10.2	11.8	13.4	14.8	16.2	17.7	19.4	21.1	22.7	24.4	26.0	27.6	29.2	30.8	32.4	34.0	35.6
79	-	-	-	-	-	-	-	-	5.9	7.7	9.5	11.1	12.7	14.2	15.6	17.1	18.8	20.5	22.2	23.8	25.5	27.1	28.8	30.4	32.0	33.6	35.2
80	-	-	-	-	-	-	-	-	-	6.9	8.7	10.4	12.0	13.5	15.0	16.6	18.3	20.0	21.7	23.3	25.0	26.7	28.3	29.9	31.6	33.2	34.8
81	-	-	-	-	-	-	-	-	-	6.0	7.9	9.7	11.3	12.9	14.3	16.0	17.7	19.4	21.1	22.8	24.5	26.2	27.9	29.5	31.2	32.8	34.4
82	-	-	-	-	-	-	-	-	-	5.2	7.1	8.9	10.6	12.2	13.7	15.4	17.2	18.9	20.6	22.3	24.0	25.7	27.4	29.1	30.7	32.4	34.0
83	-	-	-	-	-	-	-	-	-	-	6.3	8.2	9.9	11.6	13.1	14.9	16.6	18.4	20.1	21.8	23.5	25.2	26.9	28.6	30.3	32.0	33.7
84	-	-	-	-	-	-	-	-	-	-	5.5	7.4	9.2	10.9	12.5	14.3	16.1	17.8	19.6	21.3	23.0	24.8	26.5	28.2	29.9	31.6	33.3
85	-	-	-	-	-	-	-	-	-	-	-	6.6	8.5	10.3	11.9	13.7	15.5	17.3	19.0	20.8	22.6	24.3	26.0	27.8	29.5	31.2	32.9
86	-	-	-	-	-	-	-	-	-	-	-	5.8	7.8	9.6	11.3	13.2	15.0	16.7	18.5	20.3	22.1	23.8	25.6	27.3	29.1	30.8	32.6
87	-	-	-	-	-	-	-	-	-	-	-	5.0	7.0	8.9	10.6	12.6	14.4	16.2	18.0	19.8	21.6	23.4	25.1	26.9	28.7	30.4	32.2
88	-	-	-	-	-	-	-	-	-	-	-	-	6.3	8.2	10.0	12.0	13.9	15.7	17.5	19.3	21.1	22.9	24.7	26.5	28.3	30.1	31.8
89	-	-	-	-	-	-	-	-	-	-	-	-	5.5	7.5	9.4	11.5	13.3	15.1	17.0	18.8	20.6	22.4	24.3	26.1	27.9	29.7	31.5

Shaded area requires return plenum temperature of 70ºF or higher.

Table RA3.2-2 Target Superheat (Suction Line Temperature - Evaporator Saturation Temperature)

		Return Air Wet-Bulb Temperature (°F) ($T_{return, wb}$)																										
		50	51	52	53	54	55	56	57	58	59	60	61	62	63	64	65	66	67	68	69	70	71	72	73	74	75	76
Condenser Air Dry-Bulb Temperature (°F) ($T_{condenser, db}$)	90	-	-	-	-	-	-	-	-	-	-	-	-	-	6.8	8.8	10.9	12.8	14.6	16.5	18.3	20.1	22.0	23.8	25.6	27.5	29.3	31.1
	91	-	-	-	-	-	-	-	-	-	-	-	-	-	6.1	8.1	10.3	12.2	14.1	15.9	17.8	19.7	21.5	23.4	25.2	27.1	28.9	30.8
	92	-	-	-	-	-	-	-	-	-	-	-	-	-	5.4	7.5	9.8	11.7	13.5	15.4	17.3	19.2	21.1	22.9	24.8	26.7	28.5	30.4
	93	-	-	-	-	-	-	-	-	-	-	-	-	-	-	6.8	9.2	11.1	13.0	14.9	16.8	18.7	20.6	22.5	24.4	26.3	28.2	30.1
	94	-	-	-	-	-	-	-	-	-	-	-	-	-	-	6.2	8.7	10.6	12.5	14.4	16.3	18.2	20.2	22.1	24.0	25.9	27.8	29.7
	95	-	-	-	-	-	-	-	-	-	-	-	-	-	-	5.6	8.1	10.0	12.0	13.9	15.8	17.8	19.7	21.6	23.6	25.5	27.4	29.4
	96	-	-	-	-	-	-	-	-	-	-	-	-	-	-	-	7.5	9.5	11.4	13.4	15.3	17.3	19.2	21.2	23.2	25.1	27.1	29.0
	97	-	-	-	-	-	-	-	-	-	-	-	-	-	-	-	7.0	8.9	10.9	12.9	14.9	16.8	18.8	20.8	22.7	24.7	26.7	28.7
	98	-	-	-	-	-	-	-	-	-	-	-	-	-	-	-	6.4	8.4	10.4	12.4	14.4	16.4	18.3	20.3	22.3	24.3	26.3	28.3
	99	-	-	-	-	-	-	-	-	-	-	-	-	-	-	-	5.8	7.9	9.9	11.9	13.9	15.9	17.9	19.9	21.9	24.0	26.0	28.0
	100	-	-	-	-	-	-	-	-	-	-	-	-	-	-	-	5.3	7.3	9.3	11.4	13.4	15.4	17.5	19.5	21.5	23.6	25.6	27.7
	101	-	-	-	-	-	-	-	-	-	-	-	-	-	-	-	-	6.8	8.8	10.9	12.9	15.0	17.0	19.1	21.1	23.2	25.3	27.3
	102	-	-	-	-	-	-	-	-	-	-	-	-	-	-	-	-	6.2	8.3	10.4	12.4	14.5	16.6	18.6	20.7	22.8	24.9	27.0
	103	-	-	-	-	-	-	-	-	-	-	-	-	-	-	-	-	5.7	7.8	9.9	11.9	14.0	16.1	18.2	20.3	22.4	24.5	26.7
	104	-	-	-	-	-	-	-	-	-	-	-	-	-	-	-	-	5.2	7.2	9.3	11.5	13.6	15.7	17.8	19.9	22.1	24.2	26.3
	105	-	-	-	-	-	-	-	-	-	-	-	-	-	-	-	-	-	6.7	8.8	11.0	13.1	15.2	17.4	19.5	21.7	23.8	26.0
	106	-	-	-	-	-	-	-	-	-	-	-	-	-	-	-	-	-	6.2	8.3	10.5	12.6	14.8	17.0	19.1	21.3	23.5	25.7
	107	-	-	-	-	-	-	-	-	-	-	-	-	-	-	-	-	-	5.7	7.9	10.0	12.2	14.4	16.6	18.7	21.0	23.2	25.4
	108	-	-	-	-	-	-	-	-	-	-	-	-	-	-	-	-	-	5.2	7.4	9.5	11.7	13.9	16.1	18.4	20.6	22.8	25.1
	109	-	-	-	-	-	-	-	-	-	-	-	-	-	-	-	-	-	-	6.9	9.1	11.3	13.5	15.7	18.0	20.2	22.5	24.7
	110	-	-	-	-	-	-	-	-	-	-	-	-	-	-	-	-	-	-	6.4	8.6	10.8	13.1	15.3	17.6	19.9	22.1	24.4
	111	-	-	-	-	-	-	-	-	-	-	-	-	-	-	-	-	-	-	5.9	8.1	10.4	12.6	14.9	17.2	19.5	21.8	24.1
	112	-	-	-	-	-	-	-	-	-	-	-	-	-	-	-	-	-	-	5.4	7.6	9.9	12.2	14.5	16.8	19.1	21.5	23.8
	113	-	-	-	-	-	-	-	-	-	-	-	-	-	-	-	-	-	-	-	7.2	9.5	11.8	14.1	16.4	18.8	21.1	23.5
	114	-	-	-	-	-	-	-	-	-	-	-	-	-	-	-	-	-	-	-	6.7	9.0	11.4	13.7	16.1	18.4	20.8	23.2
	115	-	-	-	-	-	-	-	-	-	-	-	-	-	-	-	-	-	-	-	6.2	8.6	10.9	13.3	15.7	18.1	20.5	22.9

Table RA3.2-3_Target Temperature Split (Return Dry-Bulb – Supply Dry-Bulb)

Return Air Dry–Bulb (ºF) ($T_{return, db}$)	Return Air Wet-Bulb (ºF) ($T_{return, wb}$)																											
	50	51	52	53	54	55	56	57	58	59	60	61	62	63	64	65	66	67	68	69	70	71	72	73	74	75	76
70	20.9	20.7	20.6	20.4	20.1	19.9	19.5	19.1	18.7	18.2	17.7	17.2	16.5	15.9	15.2	14.4	13.7	12.8									
71	21.4	21.3	21.1	20.9	20.7	20.4	20.1	19.7	19.3	18.8	18.3	17.7	17.1	16.4	15.7	15.0	14.2	13.4	12.5								
72	21.9	21.8	21.7	21.5	21.2	20.9	20.6	20.2	19.8	19.3	18.8	18.2	17.6	17.0	16.3	15.5	14.7	13.9	13.0	12.1							
73	22.5	22.4	22.2	22.0	21.8	21.5	21.2	20.8	20.3	19.9	19.4	18.8	18.2	17.5	16.8	16.1	15.3	14.4	13.6	12.6	11.7						
74	23.0	22.9	22.8	22.6	22.3	22.0	21.7	21.3	20.9	20.4	19.9	19.3	18.7	18.1	17.4	16.6	15.8	15.0	14.1	13.2	12.2	11.2					
75	23.6	23.5	23.3	23.1	22.9	22.6	22.2	21.9	21.4	21.0	20.4	19.9	19.3	18.6	17.9	17.2	16.4	15.5	14.7	13.7	12.7	11.7	10.7				
76	24.1	24.0	23.9	23.7	23.4	23.1	22.8	22.4	22.0	21.5	21.0	20.4	19.8	19.2	18.5	17.7	16.9	16.1	15.2	14.3	13.3	12.3	11.2	10.1			
77	-	24.6	24.4	24.2	24.0	23.7	23.3	22.9	22.5	22.0	21.5	21.0	20.4	19.7	19.0	18.3	17.5	16.6	15.7	14.8	13.8	12.8	11.7	10.6	9.5		
78	-	-	-	24.7	24.5	24.2	23.9	23.5	23.1	22.6	22.1	21.5	20.9	20.2	19.5	18.8	18.0	17.2	16.3	15.4	14.4	13.4	12.3	11.2	10.0	8.8	
79	-	-	-	-	-	24.8	24.4	24.0	23.6	23.1	22.6	22.1	21.4	20.8	20.1	19.3	18.5	17.7	16.8	15.9	14.9	13.9	12.8	11.7	10.6	9.4	8.1
80	-	-	-	-	-	-	25.0	24.6	24.2	23.7	23.2	22.6	22.0	21.3	20.6	19.9	19.1	18.3	17.4	16.4	15.5	14.4	13.4	12.3	11.1	9.9	8.7
81	-	-	-	-	-	-	-	25.1	24.7	24.2	23.7	23.1	22.5	21.9	21.2	20.4	19.6	18.8	17.9	17.0	16.0	15.0	13.9	12.8	11.7	10.4	9.2
82	-	-	-	-	-	-	-	-	25.2	24.8	24.2	23.7	23.1	22.4	21.7	21.0	20.2	19.3	18.5	17.5	16.6	15.5	14.5	13.4	12.2	11.0	9.7
83	-	-	-	-	-	-	-	-	-	25.3	24.8	24.2	23.6	23.0	22.3	21.5	20.7	19.9	19.0	18.1	17.1	16.1	15.0	13.9	12.7	11.5	10.3
84	-	-	-	-	-	-	-	-	-	25.9	25.3	24.8	24.2	23.5	22.8	22.1	21.3	20.4	19.5	18.6	17.6	16.6	15.6	14.4	13.3	12.1	10.8

~~*Table RD-3: Target Temperature Split (Return Dry-Bulb – Supply Dry-Bulb)*~~

~~**Return Air Dry–Bulb (ºF) ($T_{return, db}$)**~~	~~**Return Air Wet-Bulb (ºF) ($T_{return, wb}$)**~~																											
	~~50~~	~~51~~	~~52~~	~~53~~	~~54~~	~~55~~	~~56~~	~~57~~	~~58~~	~~59~~	~~60~~	~~61~~	~~62~~	~~63~~	~~64~~	~~65~~	~~66~~	~~67~~	~~68~~	~~69~~	~~70~~	~~71~~	~~72~~	~~73~~	~~74~~	~~75~~	~~76~~
~~70~~	~~20.9~~	~~20.7~~	~~20.6~~	~~20.4~~	~~20.1~~	~~19.9~~	~~19.5~~	~~19.1~~	~~18.7~~	~~18.2~~	~~17.7~~	~~17.2~~	~~16.5~~	~~15.9~~	~~15.2~~	~~14.4~~	~~13.7~~	~~12.8~~	~~11.9~~	~~11.0~~	~~10.0~~	~~9.0~~	~~7.9~~	~~6.8~~	~~5.7~~	~~4.5~~	~~3.2~~
~~71~~	~~21.4~~	~~21.3~~	~~21.1~~	~~20.9~~	~~20.7~~	~~20.4~~	~~20.1~~	~~19.7~~	~~19.3~~	~~18.8~~	~~18.3~~	~~17.7~~	~~17.1~~	~~16.4~~	~~15.7~~	~~15.0~~	~~14.2~~	~~13.4~~	~~12.5~~	~~11.5~~	~~10.6~~	~~9.5~~	~~8.5~~	~~7.4~~	~~6.2~~	~~5.0~~	~~3.8~~
~~72~~	~~21.9~~	~~21.8~~	~~21.7~~	~~21.5~~	~~21.2~~	~~20.9~~	~~20.6~~	~~20.2~~	~~19.8~~	~~19.3~~	~~18.8~~	~~18.2~~	~~17.6~~	~~17.0~~	~~16.3~~	~~15.5~~	~~14.7~~	~~13.9~~	~~13.0~~	~~12.1~~	~~11.1~~	~~10.1~~	~~9.0~~	~~7.9~~	~~6.8~~	~~5.6~~	~~4.3~~
~~73~~	~~22.5~~	~~22.4~~	~~22.2~~	~~22.0~~	~~21.8~~	~~21.5~~	~~21.2~~	~~20.8~~	~~20.3~~	~~19.9~~	~~19.4~~	~~18.8~~	~~18.2~~	~~17.5~~	~~16.8~~	~~16.1~~	~~15.3~~	~~14.4~~	~~13.6~~	~~12.6~~	~~11.7~~	~~10.6~~	~~9.6~~	~~8.5~~	~~7.3~~	~~6.1~~	~~4.8~~
~~74~~	~~23.0~~	~~22.9~~	~~22.8~~	~~22.6~~	~~22.3~~	~~22.0~~	~~21.7~~	~~21.3~~	~~20.9~~	~~20.4~~	~~19.9~~	~~19.3~~	~~18.7~~	~~18.1~~	~~17.4~~	~~16.6~~	~~15.8~~	~~15.0~~	~~14.1~~	~~13.2~~	~~12.2~~	~~11.2~~	~~10.1~~	~~9.0~~	~~7.8~~	~~6.6~~	~~5.4~~
~~75~~	~~23.6~~	~~23.5~~	~~23.3~~	~~23.1~~	~~22.9~~	~~22.6~~	~~22.2~~	~~21.9~~	~~21.4~~	~~21.0~~	~~20.4~~	~~19.9~~	~~19.3~~	~~18.6~~	~~17.9~~	~~17.2~~	~~16.4~~	~~15.5~~	~~14.7~~	~~13.7~~	~~12.7~~	~~11.7~~	~~10.7~~	~~9.5~~	~~8.4~~	~~7.2~~	~~5.9~~
~~76~~	~~24.1~~	~~24.0~~	~~23.9~~	~~23.7~~	~~23.4~~	~~23.1~~	~~22.8~~	~~22.4~~	~~22.0~~	~~21.5~~	~~21.0~~	~~20.4~~	~~19.8~~	~~19.2~~	~~18.5~~	~~17.7~~	~~16.9~~	~~16.1~~	~~15.2~~	~~14.3~~	~~13.3~~	~~12.3~~	~~11.2~~	~~10.1~~	~~8.9~~	~~7.7~~	~~6.5~~
~~77~~	~~-~~	~~24.6~~	~~24.4~~	~~24.2~~	~~24.0~~	~~23.7~~	~~23.3~~	~~22.9~~	~~22.5~~	~~22.0~~	~~21.5~~	~~21.0~~	~~20.4~~	~~19.7~~	~~19.0~~	~~18.3~~	~~17.5~~	~~16.6~~	~~15.7~~	~~14.8~~	~~13.8~~	~~12.8~~	~~11.7~~	~~10.6~~	~~9.5~~	~~8.3~~	~~7.0~~
~~78~~	~~-~~	~~-~~	~~-~~	~~24.7~~	~~24.5~~	~~24.2~~	~~23.9~~	~~23.5~~	~~23.1~~	~~22.6~~	~~22.1~~	~~21.5~~	~~20.9~~	~~20.2~~	~~19.5~~	~~18.8~~	~~18.0~~	~~17.2~~	~~16.3~~	~~15.4~~	~~14.4~~	~~13.4~~	~~12.3~~	~~11.2~~	~~10.0~~	~~8.8~~	~~7.6~~
~~79~~	~~-~~	~~-~~	~~-~~	~~-~~	~~-~~	~~24.8~~	~~24.4~~	~~24.0~~	~~23.6~~	~~23.1~~	~~22.6~~	~~22.1~~	~~21.4~~	~~20.8~~	~~20.1~~	~~19.3~~	~~18.5~~	~~17.7~~	~~16.8~~	~~15.9~~	~~14.9~~	~~13.9~~	~~12.8~~	~~11.7~~	~~10.6~~	~~9.4~~	~~8.1~~
~~80~~	~~-~~	~~-~~	~~-~~	~~-~~	~~-~~	~~-~~	~~25.0~~	~~24.6~~	~~24.2~~	~~23.7~~	~~23.2~~	~~22.6~~	~~22.0~~	~~21.3~~	~~20.6~~	~~19.9~~	~~19.1~~	~~18.3~~	~~17.4~~	~~16.4~~	~~15.5~~	~~14.4~~	~~13.4~~	~~12.3~~	~~11.1~~	~~9.9~~	~~8.7~~
~~81~~	~~-~~	~~-~~	~~-~~	~~-~~	~~-~~	~~-~~	~~-~~	~~25.1~~	~~24.7~~	~~24.2~~	~~23.7~~	~~23.1~~	~~22.5~~	~~21.9~~	~~21.2~~	~~20.4~~	~~19.6~~	~~18.8~~	~~17.9~~	~~17.0~~	~~16.0~~	~~15.0~~	~~13.9~~	~~12.8~~	~~11.7~~	~~10.4~~	~~9.2~~
~~82~~	~~-~~	~~-~~	~~-~~	~~-~~	~~-~~	~~-~~	~~-~~	~~-~~	~~25.2~~	~~24.8~~	~~24.2~~	~~23.7~~	~~23.1~~	~~22.4~~	~~21.7~~	~~21.0~~	~~20.2~~	~~19.3~~	~~18.5~~	~~17.5~~	~~16.6~~	~~15.5~~	~~14.5~~	~~13.4~~	~~12.2~~	~~11.0~~	~~9.7~~
~~83~~	~~-~~	~~-~~	~~-~~	~~-~~	~~-~~	~~-~~	~~-~~	~~-~~	~~-~~	~~25.3~~	~~24.8~~	~~24.2~~	~~23.6~~	~~23.0~~	~~22.3~~	~~21.5~~	~~20.7~~	~~19.9~~	~~19.0~~	~~18.1~~	~~17.1~~	~~16.1~~	~~15.0~~	~~13.9~~	~~12.7~~	~~11.5~~	~~10.3~~
~~84~~	~~-~~	~~-~~	~~-~~	~~-~~	~~-~~	~~-~~	~~-~~	~~-~~	~~-~~	~~25.9~~	~~25.3~~	~~24.8~~	~~24.2~~	~~23.5~~	~~22.8~~	~~22.1~~	~~21.3~~	~~20.4~~	~~19.5~~	~~18.6~~	~~17.6~~	~~16.6~~	~~15.6~~	~~14.4~~	~~13.3~~	~~12.1~~	~~10.8~~

RA3.3 Field Verification and Diagnostic Testing of Forced Air System Fan Flow and Air Handler Fan Watt Draw

~~RA4.3 RE1. Purpose and Scope~~

~~ACM RE-2005~~ RA3.3 contains procedures for verifying ~~adequate~~ airflow in split system and packaged air conditioning systems serving low-rise residential buildings. The procedure is also used to verify reduced fan watts achieved through improved air distribution design, including more efficient motors and air distribution systems with ~~fewer obstructions.~~ less resistance to airflow.

The refrigerant charge test described in ~~ACM RE~~ Section RA3.2 requires ~~as a prerequisite that adequate airflow be verified. In addition, the reference method algorithms offer a credit for low fan power which can be obtained through diagnostic measurements~~verification of airflow sufficient for the refrigerant charge test. Table RA3.3-1~~Table 5-s~~ Summarizes the diagnostic measurement procedures in ~~ACM RE-2005~~RA3.3 and shows their relationship to the equipment efficiency algorithms in ~~ACM Chapter 4~~RACM3.

Table ~~RE~~RA3.3~~-5~~-1 – Summary of Diagnostic Measurements

Input to the Algorithms	Variables and Equation Reference	Description	Standard Design Value	Proposed Design: Default Value	Proposed Design: Procedure
Fan Power Ratio	FanCfm/ton RACM Eq. R3-49 FanW/~~Btu~~cfm RACM Eq. R3-49 ~~(Eq. R4-45)R3-47)~~	The term FanCfm/ton is the ratio of the evaporator fan flow to the nominal cooling capacity in tons The term FanW/cfm is the ratio of fan power in Watts to the ~~cooling capacity in Btu/h~~evaporator fan flow.	~~0.051 W/Btu.~~FanCfm/ton = 350. FanW/cfm = 0.58	~~0.051 W/Btu.~~ FanCfm/ton = 300 FanW/cfm = 0.80	RA~~Section RE4.4.3~~3.3.3.1 Diagnostic Fan Flow and RA3.3.3.3 Diagnostic Air Handler Watt Draw
~~Fan Flow over~~ Evaporator Fan Flow r	~~F_{air}~~ FanCfm/ton RACM Eqs. R3-40 and R3-41~~(Eq. R4.42 and R4.43)R3-XX)~~	The term F_{air} depends on the measured ~~airflow over the~~ evaporator ~~coil. A value of 0.925 is used as a default, but a value of 1.000 can be used if~~ airflow per ton.	~~F_{air} = 1.000 when refrigerant charge testing or TXV is required by Package D.~~FanCfm/ton = 350	~~F_{air} = 0.925~~FanCfm/ton = 300	RA~~Section RE4.4.1~~3.3.3.1 Diagnostic Fan Flow
~~Refrigerant Charge Prerequisite~~ Designed Duct System	~~n. a.~~	~~An airflow of at least 350 cfm/ton must be mained over a wet coil or 400 cfm/ton over a dry coil before a valid refrigerant charge test may be performed~~Duct systems designed to meet the criteria in 3.3.3 Duct Design	~~n. a.~~Yes	~~n. a.~~No	RA~~Section RE4.4.1~~3.3.3.2 Duct Design
~~RE2.~~ Refrigerant Charge Prerequisite	n. a.	The unit must pass the temperature split test or an airflow of at least 300 cfm/ton must be obtained for a valid refrigerant charge test	n. a.	n. a.	RA3.2.2.6 Temperature Split Method or RA3.3.3 .1 Diagnostic Fan Flow

RA3.3.1 Instrumentation Specifications

The instrumentation for the diagnostic measurements shall conform to the following specifications:

RA3.3.1.1 Pressure Measurements

All pressure measurements shall be measured with measurement systems (i.e., sensor plus data acquisition system) having an accuracy of ± 0.2 Pa. All pressure measurements within the duct system shall be made with static pressure probes Dwyer A303 or equivalent.

~~RE2.2~~When supply plenum pressure measurements are used for plenum pressure matching or flow grid measurements, the supply plenum pressure shall be taken at the following location.

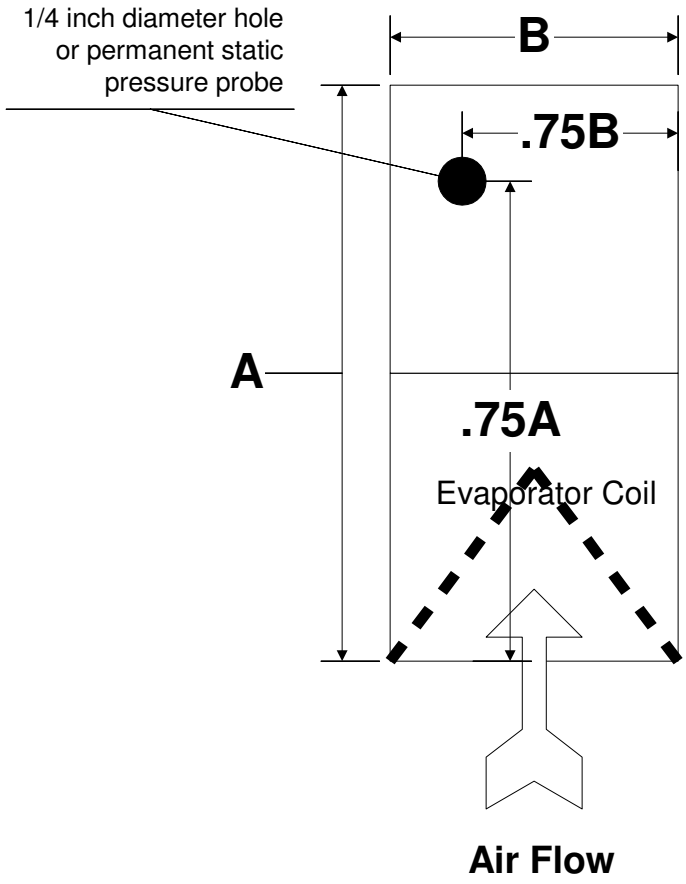

This location can be in any one of the four sides of the coil box/supply plenum.

This location shall have a 1/4" diameter hole or a permanently affixed static pressure probe. The location shall be labeled "Title 24 – Supply Pressure Measurement Location" in at least 12-point type.

RA3.3.1.2 Fan Flow Measurements

All measurements of distribution fan flows shall be made with measurement systems (i.e., sensor plus data acquisition system) having an accuracy of ± 7% reading or ± 5 cfm whichever is greater.

RA3.3.1.3 Watt Measurements

All measurements of air handler watt draws shall be made with true power measurement systems (i.e., sensor plus data acquisition system) having an accuracy of ± 2% reading or ± 10 watts whichever is greater.

RA3.3.2 Apparatus

RA3.3.2.1 System Fan Flows

HVAC system fan flow shall be measured using one of the following methods.

RA3.3.2.1.1 Plenum Pressure Matching Measurement

The apparatus for measuring the system fan flow shall consist of a duct pressurization and flow measurement device (subsequently referred to as a fan flowmeter) meeting the specifications in ~~RE2.2~~RA3.3.1, a static pressure transducer meeting the specifications in Section ~~RE2~~RA3.3.1, ~~and an air barrier between the return duct system and the air handler inlet.~~ The measuring device shall be attached at the air handler blower compartment door~~. All registers shall be in their normal operating condition. The static pressure probe shall be fixed~~, or alternatively at the inlet to a return from the conditioned space. The measuring device shall be attached at a point where all the fan airflow shall flow through it. When the air handler blower compartment door is used an air barrier must be placed between the return duct system and the air handler inlet(s). All registers shall be in their normal operating condition. The static pressure probe shall be fixed to the supply plenum so that it is not moved during this test.

RA3.3.2.1.2 Flow Capture Hood Measurement

A flow capture hood meeting the specifications in Section ~~RE2.2~~RA3.3.1 may be used to verify the fan flow at the return register(s~~)~~) if the device has a capture area at least as large as the returns in all dimensions. All registers shall be in their normal operating position. Measurement(s) shall be taken at the return grill(s).

RA3.3.2.1.3 Flow Grid Measurement

The apparatus for measuring the system fan flow shall consist of a flow measurement device (subsequently referred to as a fan flow grid) meeting the specifications in ~~RE2.2~~RA3.3.1 and a static pressure transducer meeting the specifications in Section ~~RE2~~RA3.3.1. The measuring device shall be attached at a point where all the fan airflow shall flow through the flow grid. All registers shall be in their normal operating condition. The static pressure probe shall be fixed to the supply plenum so that it is not moved during this test.

RA3.3.2.2 Air Handler Watts

The air handler watt draw shall be measured using one of the following methods.

RA3.3.2.2.1 Portable Watt Meter Measurement

The apparatus for measuring the air handler watt draw shall consist of a watt-meter meeting the specifications in ~~RE3.1~~RA3.3.1. The measuring device shall be attached to measure the air handler fan watt draw. All registers and blower access panel(s) shall be in their normal operating condition.

RA3.3.2.2.2 Utility Revenue Meter Measurement

The apparatus for measuring the air handler watt draw shall consist of the utility revenue meter meeting the specifications in ~~RE3.1~~RA3.3.1 and a stopwatch measuring in seconds. All registers and blower access panel(s) shall be in their normal operating condition.

RA3.3.3 Procedure

~~To determine and verify airflow credit a diagnostic~~This procedure determines the evaporator fan flow ~~measurement shall demonstrate air flow greater than the criteria and installation of the~~ , fan Watts, and duct ~~system must be designed to meet the criteria in RE4.2.~~design compliance.

To determine and verify airflow and fan watt draw credit, in addition to verifying air flow, the air handler fan watt draw measurement shall show fan watts less than that claimed in ACM calculations and shown in CF-1R.

RA3.3.3.1 Diagnostic Fan Flow

~~*Table RE-2 – Airflow Criteria*~~

For compliance calculations using evaporator airflow in excess of the default, the system must conform with the criteria in the Duct Design Section below and be measured using one of the following methods.

For multi-zone systems the measured airflow must be taken in each and every operating mode of the system. This must be accomplished without bypasses from the supply ductwork to the return ductwork.
Note: All airflows are for the fan set at the speed used for air conditioning.

~~Test and Condition~~	~~Cooling air flow (Wet Coil)~~	~~Test Flow if Dry Coil~~
~~Airflow needed for compliance credit~~	~~400 cfm/ton~~	~~450 cfm/ton~~

The system passes the ~~fan flow test if the fan flow measured using one of the following methods is greater than the criteria in Table RE2. The Wet Coil criteria shall be used if the air conditioner is operating and conditions are such that the coil is wet. Otherwise the Dry coil criteria shall be used~~ Diagnostic Fan Flow ~~The fan flow measurement shall be performed using the following procedures; all registers shall be fully open, and the air filter shall be installed. Turn~~test if the evaporator airflow is equal to or greater than the value claimed in compliance calculations and reported by the ACM on the ~~system fan at the maximum speed used in the installation (usually~~CF-1R.

Diagnostic fan flows shall be converted to FanCfm/ton by dividing the ~~cooling speed when air conditioning is present) and measure the fan flow at the return grille(s) with a calibrated flow capture hood to determine the total system return fan flow. The system~~measured fan flow (Qah~~, cfm) shall be the sum of the measured return flows.~~) by the nominal tons of the air conditioner.

RA3.3.3.1.1 Diagnostic Fan Flow Using Plenum Pressure Matching

~~The~~This fan flow measurement shall be performed using the following procedures:

~~RA3.~~1. If the fan flowmeter is to be connected to the air handler outside the conditioned space, then the door or access panel between the conditioned space and the air handler location shall be opened.

2. With the system fan on at the maximum speed used in the installation (~~usually~~ the cooling speed when air conditioning is present), measure the pressure difference (in ~~pascal~~Pa) between the supply plenum and the conditioned space (Psp). Psp is the target pressure to be maintained during the fan flow tests. ~~If there is no access to the supply plenum, then place~~Place the pressure probe in the ~~nearest supply duct~~Title 24 – Supply Pressure Measurement Location described in Section 3.3.1. . Adjust the probe to achieve the highest pressure and then firmly attach the probe ~~(e.g., with duct tape)~~ to ensure that it does not move during the fan flow test.~~3. Block~~

~~RA4.~~3. If the fan flowmeter is to be connected to the air handler at the access, block the return duct system from the plenum upstream of the air handler fan and the fan flowmeter. Filters are often located in an ideal location for this blockage.

~~1.~~ Attach the fan flowmeter ~~device to the duct system at the air handler. For many air handlers, there will be a removable section that allows access~~ to the ~~fan that is suitable for this purpose.~~

4. duct system at the air handler or alternatively at the inlet to the return from the conditioned space with the grille and filter removed.

~~RA5.~~5. Turn on the system fan and the fan flow-meter, adjust the fan flowmeter until the pressure between supply plenum and conditioned space matches Psp.

~~RA6.~~6. Record the flow through the flowmeter (Qah, cfm) - this is the diagnostic fan flow. In some systems, ~~typical~~ system fan and fan flowmeter combinations may not be able to produce enough flow to reach Psp. In this case record the maximum flow (Qmax, cfm) and pressure (Pmax) between the supply plenum and the conditioned space. The following equation shall be used to correct measured system flow and pressure (Qmax and Pmax) to operating condition at operating pressure (Psp).

Equation ~~RE~~RA3.3-1 Air Handler Flow Qah = Qmax x (Psp/Pmax) ^.5

RA3.3.3.1.2 Diagnostic Fan Flow Using Flow Grid Measurement

The fan flow measurement shall be performed using the following procedures:

~~2.~~1. With the system fan on at the maximum speed used in the installation (~~usually~~ the cooling speed when air conditioning is present), measure the pressure difference (in ~~pascal~~Pascal) between the supply plenum and the conditioned space (Psp). ~~If there is no access to the supply plenum, then place~~Place the pressure probe in the ~~nearest supply duct~~Title 24 – Supply Pressure Measurement Location described in Section 3.3.1. . Adjust the probe to achieve the highest pressure and then firmly attach the probe ~~(e.g., with duct tape)~~ to ensure that it does not move during the fan flow test.

~~3.~~2. The flow grid shall be attached at a point where all the fan air flows through the flow grid.

~~4.~~3. Re-measure the system operating pressure with the flow grid in place.

~~5.~~4. Measure the air-flow through the flow grid (Qgrid) and the test pressure (Ptest).

~~6.~~5. The following equation for air handler flow shall be used to correct flow through the flow grid and pressure (Qgrid and Ptest) to operating condition at operating pressure (Psp).

Equation ~~RE~~RA3.3-2 Qah = Qmax x (Psp/Ptest) ^.5

RA3.3.3.1.3 Diagnostic Fan Flow Using Flow Capture Hood

The fan flow measurement shall be performed using the following procedures; all registers shall be fully open, and the air filter shall be installed. Turn on the system fan at the cooling speed and measure the fan flow at the return grille(s) with a calibrated flow capture hood to determine the total system return fan flow. The system fan flow (Qah, cfm) shall be the sum of the measured return flows.

RA3.3.3.2 Duct Design

The ~~duct system installation shall be~~ system meets the Duct Design criteria if it is verified to be consistent with ~~the~~a supplied design meeting the following requirements. The duct system shall be designed to meet the airflow rate with the available external static pressure from the air handler at that airflow. The duct design shall have calculations showing the duct system will operate at equal to or greater than 0.~~0375~~0292 cfm/Btu (350 cfm/12000 Btu) rated capacity at ARI test ~~condtions (450 cfm/12000 Btu)~~ conditions in cooling speed ~~(dry coil)~~ or, if heating only, equal to or greater than 16.8 cfm per 1000 Btu/hr furnace output. The design shall be based on: the available external static pressure from the air handler, the pressure drop of external devices, the equivalent length of the runs, as well as the size, type and configuration of the ducts. The duct layout shall be included on the plans and the duct design shall be reported on the CF-6R and posted on-site.

RA3.3.3.3 Diagnostic Air Handler Watt Draw

The system passes the Watt Draw test if the air handler watt draw is less than or equal to the value claimed in compliance calculations and reported by the ACM on the CF-1R.–For multi-zone systems the measured air handler watt draw must be less than or equal to the value claimed in compliance

calculations and reported by the ACEM on the CF-1R. This must be accomplished all zones operating and without bypasses from the supply ductwork to the return ductwork.

The diagnostic air handler watt draw shall be measured using one of the following methods:

RA3.3.3.3.1 Diagnostic Air Handler Watt Draw Using Portable Watt Meter

The air handler watt draw measurement shall be performed using the following procedures; all registers shall be fully open, and the air filter shall be installed. Turn on the system fan at the maximum speed used in the installation (usually the cooling speed when air conditioning is present) and measure the fan watt draw (Wfan).

RA3.3.3.3.2 Diagnostic Air Handler Watt Draw Using Utility Revenue Meter

The air handler watt draw measurement shall be performed using the following procedures; all registers shall be fully open, and the air filter shall be installed. Turn on the system fan at the maximum speed used in the installation (usually the cooling speed when air conditioning is present) and turn off every circuit breaker except the one exclusively serving the air handler. Record the Kh factor on the revenue meter, count the number of full revolutions of the meter wheel over a period exceeding 90 seconds. Record the number of revolutions (Nrev) and time period (trev, seconds). Compute the air handler watt draw (Wfan) using the following formula:

Equation ~~RE~~RA3.3-3 Air Handler Fan Watt Draw $Wfan = (Kh \times Nrev \times 3600) / trev$

Return all circuit breakers to their original positions.

RA3.4 Procedures for Verifying the Presence of a ~~Thermostatic Expansion Valve~~Charge Indicator Light or High Energy Efficiency Ratio Equipment

RA3.4.1 Purpose and Scope

The purpose of these procedures is to verify that residential space cooling systems and heat pumps have the required components to achieve the energy efficiency claimed in the compliance documents. The procedures only apply when a ~~TXV~~Charge Indicator Light (CIL) is specified for split system equipment or an EER higher than the default is claimed. For dwelling units with multiple systems, the procedures shall be applied to each system separately.

The installer shall certify to the builder, building official and HERS rater that he/she has installed all the correct components.

The reference method algorithms adjust (improve) the efficiency of air conditioners and heat pumps when field verification indicates the specified components are installed. Table ~~RI1~~RA3.4-1 summarizes the algorithms that are affected.

Table ~~RI-1~~RA3.4-1 – SUMMARY OF FIELD VERIFICATION

~~Diagnostic~~Field Verification Check	Variables and Equation Reference	Description	Standard Design Value	Proposed Design	
				Default Value	Procedure
Presence of a ~~TXV~~CIL	~~F_{TXV}~~ F_{CIL} (Eq. ~~F4-42 and F4-43)~~RACM Manual 4-39 and RACM Manual 4-40)	~~F_{TXV}~~F_{CIL} takes on a value of 0.96 when the system has a verified ~~TXV~~CIL or has been diagnostically tested for the correct refrigerant charge. Otherwise, ~~F_{TXV}~~F_{CIL} has a value of 0.96.	Split systems are assumed to have refrigerant charge testing or a ~~TXV~~CIL, when required by Package D.	No ~~TXV~~CIL or refrigerant charge testing.	~~RI2~~Section RA3.4.2

Presence of a matched High Efficiency Compressor Unit, Evaporator Coil, Refrigerant Metering Device, and (where specified) Air Handling Unit and/or Time Delay Relay.	EER	The EER is the Energy Efficiency Ratio at 95 F outdoors specified according to ARI procedures for the matched combination	Systems are assumed to have the default EER based on SEER, see ~~ACM~~RACM Manual Equation ~~4.44.~~R3-42	Default EER	~~RI~~ Sections RA3.4.3 and ~~RI4~~RA3.4.4

RA3.4.2 CIL Verification Procedure

The procedure shall consist of visual verification that the ~~TXV~~CIL is installed on the system.

RA3.4.3 Time Delay Relay Verification Procedure

When a high EER system specification includes a time delay relay, the installation of the time delay relay shall be verified.

The procedure shall be:

1) ___Turn the thermostat down until the compressor and indoor fan are both running.
2) ___Turn the thermostat up so the compressor stops running.
3) ___Verify that the indoor fan continues to run for at least 30 seconds.

RA3.4.4 Matched Equipment Procedure

When installation of specific matched equipment is necessary to achieve a high EER, installation of the specific equipment shall be verified.

The procedure shall consist of visual verification of installation of the following equipment and confirmation that the installed equipment matches the equipment required to achieve the high EER rating:

1) ___The specified labeled make and model number of the outdoor unit.
2) ___The specified labeled make and model number of the inside coil.
3) ___The specified labeled make and model of the furnace or air handler when a specific furnace or air handler is necessary to achieve the high EER rating,
4) ___The specified metering device when a specific refrigerant metering device (such as a TXV or an EXV) is necessary to achieve the high efficiency rating.

~~ACM RH-2005~~

~~Appendix RH –~~

RA3.5 High Quality Batt Insulation Installation Procedures

RA3.5.1 Purpose and Scope

~~ACM RH-200~~RA~~8~~3.5 is a procedure for verifying the quality of insulation installation in low-rise residential buildings. A compliance credit is offered when this procedure is followed by the insulation installer and a qualified HERS rater. The procedure and credit applies to wood framed construction with wall stud cavities, ceilings, and roof assemblies insulated with mineral fiber or cellulose insulation in low-rise residential buildings.

~~RH2.~~The procedure for verifying the quality of closed-cell spray polyurethane foam insulation installation is outlined Joint Appendix 7.

RA3.5.2 Terminology

Air Barrier — An air barrier is needed in all thermal envelope assemblies to prevent air movement. Insulation, other than foam, is not designed to stop air movement. For insulation installed horizontally, such as in an attic, the insulation must be in substantial contact with the assembly air barrier (usually the ceiling drywall) on one side for it to perform at its rated R-value. A wall or ceiling covering that has multiple leakage sites (such as 1 x 6 ~~toung~~tongue and ~~grove~~groove board ceilings) can not serve as an air barrier.

Air-tight — Thermal envelope assemblies (such as wall assemblies) shall be built to minimize air movement. Air movement can move unwanted heat and moisture through or into the assembly. For these procedures air-tight shall be defined as an assembly or air barrier with all openings greater than 1/8 inch caulked, or sealed with expansive or minimally expansive foam.

Excessive Compression— Batt insulation may be compressed up to 50% at obstructions such as plumbing vents and in non-standard cavities, but compression of more than 50% in any dimension is excessive and shall not be allowed. Where obstructions would cause the insulation to be compressed greater than 50% insulation shall be cut to fit around the obstruction.

Delaminated — Batts are often split or delaminated to fit around an obstruction. For example when an electrical wire runs through a wall cavity the insulation must still fill the area both in front of the wire and the area behind the wire. This is typically accomplished by delaminating the batt from one end and placing one side of the batt behind the wire and the other in front of the wire. The location of the delamination must coincide with the location of the obstruction. For example if the wire is one third of the distance from the front of the cavity the batt should be delaminated so that two thirds of the batt goes behind the wire and one third in front of the wire.

Draft Stops — Draft stops are installed to prevent air movement between wall cavities, other interstitial cavities - and the attic. They are typically constructed of dimensional lumber blocking, drywall or plywood. Draft stops become part of the attic air barrier and shall be air-tight. Fire -blocks constructed of -porous insulation materials cannot serve as draft stops since they are not air-tight.

Friction Fit — Friction fit batts are commonly used. Friction fit batts have enough side-to-side frictional force to hold the batt in place without any other means of attachment.

Gaps — A gap is an uninsulated area at the edge of or between batts. Gaps in insulation are avoidable and are not permitted.

Hard Covers Hard covers shall be installed above areas where there is a drop ceiling. For example a home with 10 ft ceilings may have an entry closet with a ceiling lowered to 8 ft. A hard cover (usually a piece of plywood) is installed at the 10 ft. level above the entry closet. Hard covers become part of the ceiling air barrier and shall be air-tight.

Inset Stapling In windy areas installers often staple the flanges of faced batts to the sides of the stud in order to assure that the insulation remains in place until covered with drywall, particularly on the wall between the house and the garage where there isn't any exterior sheathing to help keep the insulation in place. The void created by the flange inset shall not extend more than two inches from the stud on each side.

Net Free-Area The net free-area of a vent cover is equal to the total vent opening less the interference to air flow caused by the screen or louver. Screened or louvered vent opening covers are typically marked by the manufacturer with the "net free-area." For example a 22.5 in. by 3.5 in. eave vent screen with a total area of 78.75 square inches may have a net free-area of only 45 square inches.

Voids When batt insulation is pushed too far into a wall stud cavity a void is created between the front of the batt and the drywall. Batts shall be fully lofted and fill the cavity front-to-back. Small voids less than ¾ in. deep on the front or back of a batt shall be allowed as long as the total void area is not over 10% of the batt surface area. This definition shall not preclude the practice of inset stapling as long as the void created by the flange inset meets the specification in the definition of inset stapling. Improper spraying or blowing of insulation in ceilings and wall cavities can result in areas with insufficient insulation not meeting the specified installed density and R-value. Wall and cathedral ceiling cavity areas where cellulose insulation has fallen away shall be filled with insulation. Depressions in netting or material supporting blown insulation in walls and cathedral ceilings shall be filled with insulation.

RA3.5.3 Raised Floors and Floors Over Garages

- Batts shall be correctly sized to fit snugly at the sides and ends, but not be so large as to buckle.
- Batts shall be cut to fit properly without gaps. Insulation shall not be doubled-over or compressed.
- Insulation shall be in contact with an air barrier - usually the subfloor.
- On floors that are over garages, or where there is an air space between the insulation and the subfloor, the rim joist shall be insulated.
- Batts shall be cut to butt-fit around wiring and plumbing, or be split (delaminated) so that one layer can fit behind the wiring or plumbing, and one layer fit in front.
- If the insulation is faced, the facing shall be placed toward the living space and be in contact with the underside of the floor sheathing. Continuous support shall be provided to keep the facing in contact with the floor sheathing. Filling the entire cavity with insulation and providing support with netting at the bottom of the framing is one acceptable method.
- Insulation shall be properly supported to avoid gaps, voids, and compression.

RA3.5.4 Wall Insulation

RA3.5.4.1 Batt Installation

- Wall stud cavities shall be caulked or foamed to provide a substantially air-tight envelope to the outdoors, attic, garage and crawl space. Special attention shall be paid to plumbing and wiring penetrations through the top plates, electrical boxes that penetrate the sheathing, and the sheathing seal to the bottom plate.

- Installation shall uniformly fill the cavity side-to-side, top-to-bottom, and front-to-back.
- The batt shall be friction fitted into the cavity unless another support method is used.
- Batt insulation shall be installed to fill the cavity and be in contact with the sheathing on the back and the wallboard on the front - no gaps or voids.
- Batts with flanges that are inset stapled to the side of the stud must be flush with the face of the cavity (or protrude beyond) except for the portion that is less than two inches from the edge of the stud.
- Non-standard-width cavities shall be filled with batt insulation snuggly fitted into the space without excessive compression.
- Batt insulation shall be cut to butt-fit around wiring and plumbing, or be split (delaminated) so that one layer can fit behind the wiring or plumbing, and one layer fit in front.

RA3.5.4.2 Narrow-Framed Cavities

- Non-standard width cavities shall be filled by batt insulation cut to snuggly fit into the space.
- Narrow spaces (two inches or less) at windows, between studs at the building's corners, and at the intersections of partition walls shall be filled with batt insulation snuggly fitted into the space (without excessive compression), loose fill insulation, or expansive or minimally expansive foam.

RA3.5.4.3 Special Situations

RA3.5.4.3.1 Installations Prior to Exterior Sheathing or Lath

- Hard to access wall stud cavities such as; corner channels, wall intersections, and behind tub/shower enclosures shall be insulated to the proper R-value. This may have to be done prior to the installation of the exterior sheathing or the stucco lath.

RA3.5.4.3.2 Obstructions

- Insulation shall be cut to fit around wiring and plumbing without compression.
- Insulation shall be placed between the sheathing and the rear of electrical boxes and phone boxes.
- In cold climates, where water pipes may freeze (Climate Zones 14 and 16) pipes shall have at least two-thirds of the insulation between the water pipe and the outside. If the pipe is near the outside, as much insulation as possible shall be placed between the pipe and the outside (without excessive compression), and no insulation shall be placed between the pipe and the inside.

RA3.5.4.3.3 Rim Joists

- All rim-joists shall be insulated to the same R-Value as the adjacent walls.
- The insulation shall be installed without gaps or excessive compression.

RA3.5.4.3.4 Kneewalls and Skylight Shafts

- All kneewalls and skylight shafts shall be insulated to a minimum of R-19.
- The insulation shall be installed without gaps and with minimal compression.
- For steel-framed kneewalls and skylight shafts, external surfaces of steel studs shall be covered with batts or rigid foam unless otherwise specified on the ~~CF-1R~~Certificate of Compliance using correct U-factors from Joint Appendix ~~IV~~4, Table ~~IV~~4.3.4 ~~-11~~ (or U-factors approved by the ~~CEC~~Commission Executive Director).
- The house side of the insulation shall be in contact with the drywall or other wall finish.
- The insulation shall be supported so that it will not fall down by either fitting to the framing, stapling in place with minimal compression, or using other support such as netting.

RA3.5.4.3.5 HVAC/Plumbing Closet

- Walls of interior closets for HVAC and/or water heating equipment, ~~that~~which require combustion air venting, shall be insulated to the same R-value as the exterior walls.

RA3.5.4.3.6 Loose Fill Wall Insulation

- Wall stud cavities shall be caulked or foamed to provide a substantially air-tight envelope to the outdoors, attic, garage and crawl space. Special attention shall be paid to plumbing and wiring penetrations through the top plates, electrical boxes that penetrate the sheathing, and the sheathing seal to the bottom plate.
- Installation shall uniformly fill the cavity side-to-side, top-to-bottom, and front-to-back.
- Loose fill insulation shall be installed to fill the cavity and be in contact with the sheathing on the back and the wallboard on the front - no gaps or voids.
- Loose fill wall insulation shall be installed to fit around wiring, plumbing, and other obstructions.
- The installer shall certify on the Installation Certificate forms ~~CF-6R and IC-1~~ that the manufacturer's minimum weight-per-square-foot requirement has been met.

RA3.5.5 Ceiling and Roof Insulation

RA3.5.5.1 Batt Insulation

RA3.5.5.1.1 General Requirements

- Batts shall be correctly sized to fit snugly at the sides and ends.
- Batts shall be installed so that they will be in contact with the air barrier.
- Where necessary, batts shall be cut to fit properly - there shall be no gaps, nor shall the insulation be doubled-over or compressed.
- When batts are cut to fit a non-standard cavity, they shall be snuggly fitted to fill the cavity without excessive compression.
- Batts shall be cut to butt-fit around wiring and plumbing, or be split (delaminated) so that one layer can fit behind the wiring or plumbing, and one layer fit in front.
- For batts that are taller than the trusses, full-width batts shall be used so that they expand to touch each other over the trusses.
- Hard covers or draft stops shall be placed over all drop ceiling areas and interior wall cavities to keep insulation in place and stop air movement. If hard covers or draft stops are missing or incomplete, they shall be completed before insulation is installed.
- Required eave ventilation shall not be obstructed - the net free-ventilation area of the eave vent shall be maintained.
- Eave vent baffles shall be installed to prevent air movement under or into the batt.
- Insulation shall cover all recessed lighting fixtures. If the fixtures are not rated for insulation ~~contact~~cover (IC) and air tight, the fixtures shall either be replaced or eliminated.
- All recessed light fixtures that penetrate the ceiling shall be IC and air tight ~~(AT)~~ rated and shall be sealed with a gasket or caulk between the housing and the ceiling.

RA3.5.5.1.2 Special Situations

RA3.5.5.1.2.1 Rafter Ceilings

- An air space shall be maintained between the insulation and roof sheathing if required by California Building Code section 1505.3.

- Facings and insulation shall be kept away from combustion appliance flues in accordance with flue manufacturers' installation instructions or labels on the flue.

RA3.5.5.1.2.2 HVAC Platform

- Appropriate batt insulation shall be placed below any plywood platform or cat-walks for HVAC equipment installation and access.
- Batts shall be installed so that they will be in contact with the air barrier.

RA3.5.5.1.2.3 Attic Access

- Permanently attach rigid foam or a batt of insulation to the access door using adhesive or mechanical fastener. The bottom of the attic access shall be gasketed.

RA3.5.5.2 Loose-Fill Ceiling Insulation

RA3.5.5.2.1.1 General Requirements

- Baffles shall be placed at eaves or soffit vents to keep insulation from blocking eave ventilation. The required net free-ventilation shall be maintained.
- Eave vent baffles shall be installed to prevent air movement under or into the loose-fill insulation
- Hard covers or draft stops shall be placed over all drop ceiling areas and interior wall cavities to keep insulation in place and stop air movement. If hard covers or draft stops are missing or incomplete, they shall be completed before insulation is completed or the entire drop area shall be filled with loose-fill insulation level with the rest of the attic.
- Attic rulers appropriate to the material installed shall be evenly distributed throughout the attic to verify depth: one ruler for every 250 square feet and clearly readable from the attic access. The rulers shall be scaled to read inches of insulation and the R-value installed.
- Insulation shall be applied underneath and on both sides of obstructions such as cross-bracing and wiring.
- Insulation shall be applied all the way to the outer edge of the wall top plate.
- Insulation shall cover recessed lighting fixtures. If the fixtures are not rated for insulation ~~contact~~cover (IC) and air tight, the fixtures shall either be replaced or eliminated.
- All recessed light fixtures that penetrate the ceiling shall be IC and air tight ~~(AT)~~ rated and shall be sealed with a gasket or caulk between the housing and the ceiling.
- Insulation shall be kept away from combustion appliance flues in accordance with flue manufacturer's installation instructions or labels on the flue.
- Insulation shall be blown to a uniform thickness throughout the attic with all areas meeting or exceeding the insulation manufacturer's minimum requirements for depth and weight-per-square-foot.
- The installer shall certify on the Installation Certificate forms ~~CF-6R and IC-1~~ that the manufacturer's minimum weight-per-square-foot requirement has been met.
- The HERS rater shall verify that the manufacturer's minimum weight-per-square-foot requirement has been met for attics insulated with loose-fill mineral-fiber insulation. Verification shall be determined using the methods of the Insulation Contractor's Association of America (ICAA) Technical Bulletin #17 except that only one sample shall be taken in the area that appears to have the least amount of insulation. The rater shall record the weight-per-square-foot of the sample on the ~~CF-4R~~Certificate of Field Verification Certificate of Field Verification and Diagnostic Testing.
- The HERS rater shall verify that the manufacturer's minimum insulation thickness has been installed. For cellulose insulation this verification shall take into account the time that has elapsed since the insulation was installed. At the time of installation, the insulation shall be greater than or equal to the manufacturer's minimum initial insulation thickness. If the HERS rater does not verify the insulation

thickness at the time of installation, and if the insulation has been in place less than seven days, the insulation thickness shall be greater than the manufacturer's minimum required thickness at the time of installation less 1/2 inch to account for settling. If the insulation has been in place for seven days or longer, the insulation thickness shall be greater than or equal to the manufacturer's minimum required settled thickness.

RA3.5.5.2.2 Special Situations

RA3.5.5.2.2.1 Kneewalls and Skylight Shafts:

- Kneewalls and skylight shafts shall be insulated to a minimum of R-19. If loose fill insulation is used it shall be properly supported with netting or other support material.

RA3.5.5.2.2.2 HVAC Platform

- Pressure-fill the areas under any plywood platform or walks for HVAC equipment installation and access or verify that appropriate batt insulation has been installed.

RA3.5.5.2.2.3 Attic Access

- Permanently attach rigid foam or a batt of insulation to the access door using adhesive or mechanical fastener.

RA3.5.6 Materials

- Materials shall comply with, and be installed in conformance with, all applicable building codes for building.. Uniform Building Code (including, but not limited to, 1997 UBC Section 707) and installed to meet all applicable fire codes.
- Materials shall meet California Quality Standards for Insulating Material, Title 24, Chapter 4, Article 3, listed in the California Department of Consumer Affairs Consumer Guide and Directory of Certified Insulating Materials.
- Materials shall comply with flame spread rating and smoke density requirements of Sections 2602 and 707 of the Title 24, Part 2: all installations with exposed facings must use fire retardant facings which have been tested and certified not to exceed a flame spread of 25 and a smoke development rating of 450. Insulation facings that do not touch a ceiling, wall, or floor surface, and faced batts on the undersides of roofs with an air space between the ceiling and facing are considered exposed applications.
- Materials shall be installed according to manufacturer specifications and instructions.

RA3.5.7 Equipment

- Scales - The scales used to weigh density samples shall be accurate to within +/- 0.03 pounds. Scales shall be calibrated in accordance with manufacture's instructions.

RA3.5.8 R-Value and U-Value Specifications

See ~~CF-1R~~the Certificate for Compliance for minimum R-value requirements; ~~for non-standard~~Refer to JA4 for construction assemblies~~, also see applicable form 3R~~.

RA3.5.9 Certificates

An Insulation Installation Certificate ~~(IC-1)~~ signed by the insulation installer shall be provided that states that the installation is consistent with the plans and specifications for which the building permit was issued. The certificate shall also state the installing company name, insulation manufacturer's name and material identification, the installed R-value, and, in applications of loose-fill insulation, the minimum installed weight-per-square-foot (or the minimum weight per cubic foot) consistent with the manufacturer's

labeled installed-design-density for the desired R-Value, and the number of inches required to achieve the desired R-Value. The insulation installer shall also complete ~~a~~the applicable sections of the Installation Certificate form ~~CF-6R~~ and attach a bag label or a manufacturer's coverage chart for every insulation material used.

RA3.5.10 Certificate Availability

The Insulation ~~Certificate (IC-1) and~~ Installation Certificate ~~(CF-6R~~, with insulation material bag labels or coverage charts attached), signed by the insulation installer, shall be available on the building site for each of the HERS rater's verification inspections. Note: The HERS rater cannot verify compliance credit without these completed forms.

RA3.6 Site AddressField Verification and Diagnostic Testing of Photovoltaic Systems

RA3.6.1 Purpose and Scope

The field verification and diagnostic testing procedures in this Appendix are intended to ensure that the:

- PV modules and inverters used in the expected performance calculations are actually installed at the applicable site;
- PV modules are minimally shaded, or if shaded, that the actual shading does not exceed the shading characteristics were included in the expected performance calculations; and
- Measured output power from the system matches that expected by the PV Calculator within the specified margin at the prevailing conditions at the time of field verification and diagnostic testing.

This is required to comply with the NSHP Compliance Option as explained in the Residential ACM Manual Appendix B. The actual protocol is included in Appendix 4 of the New Solar Homes Partnership Guidebook (most current version, available at http://www.gosolarcalifornia.ca.gov/documents/index.html).

Residential Appendix RA4 – 2008

Appendix RA4 – Eligibility Criteria for Energy Efficiency Measures

RA4.1 Purpose and Scope

This appendix contains the eligibility requirements which must be met when any of the following features are installed to achieve compliance with the residential building energy efficiency standards.

RA4.2 Building Envelope Measures

RA4.2.1 Cool Roofs

Cool roofs shall meet specific eligibility and installation criteria to receive credit for compliance. All products qualifying for compliance with Sections 141, 143(a)1, ~~or~~ 149(b)-1-B, 151(f)11, or 152(b)1H shall be rated and labeled by the Cool Roof Rating Council in accord with Section 10-113 of the standards. The use of a cool roof shall be listed on the Certificate of Compliance.

RA4.2.2 Radiant Barriers

Radiant barriers shall meet specific eligibility and installation criteria to be modeled by any compliance software and receive energy credit for compliance with the energy efficiency standards for low-rise residential buildings.

The emittance of the radiant barrier shall be less than or equal to 0.05 as tested in accordance with ASTM C-1371 or ASTM E408.

Installation shall conform to ASTM C1158 (Standard Practice for Installation and Use of Radiant Barrier Systems (RBS) in Building Construction), ASTM C727 (Standard Practice for Installation and Use of Reflective Insulation in Building Constructions), ASTM C1313 (Standard Specification *for Sheet Radiant Barriers for Building Construction Applications*), and ASTM C1224 (*Standard Specification for Reflective Insulation for Building Applications*), and the radiant barrier shall be securely installed in a permanent manner with the shiny side facing down toward the interior of the building (ceiling or attic floor). Moreover, radiant barriers shall be installed at the top chords of the roof truss/rafters in *any* of the following methods:

i. Draped over the truss/rafter (the top chords) before the upper roof decking is installed.
ii. Spanning between the truss/rafters (top chords) and secured (stapled) to each side.
iii. Secured (stapled) to the bottom surface of the truss/rafter (top chord). A minimum air space shall be maintained between the top surface of the radiant barrier and roof decking of not less than 1.5 inches at the center of the truss/rafter span.
iv. Attached [laminated] directly to the underside of the roof decking. The radiant barrier shall be laminated and perforated by the manufacturer to allow moisture/vapor transfer through the roof deck.

In addition, the radiant barrier shall be installed to cover all gable end walls and other vertical surfaces in the attic.

The attic shall be ventilated to:

i. Conform to the radiant barrier manufacturer's instructions.
ii. Provide a minimum free ventilation area of not less than one square foot of vent area for each 150 square feet of attic floor area.
iii. Provide no less than 30 percent upper vents.

Ridge vents or gable end vents are recommended to achieve the best performance. The material should be cut to allow for full airflow to the venting.

The product shall meet all requirements for California certified insulation materials [radiant barriers] of the Department of Consumer Affairs, Bureau of Home Furnishings and Thermal Insulation, as specified by CCR, Title 24, Part 12, Chapter 12-13, Standards for Insulating Material.

The use of a radiant barrier shall be listed in the Special Features and Modeling Assumptions listings of the Certificate of Compliance and described in detail in the ACM Compliance Supplement.

~~Radiant barriers shall meet specific eligibility and installation criteria to be modeled by any compliance software and receive energy credit for compliance with the energy efficiency standards for low-rise residential buildings.~~

~~The emittance of the radiant barrier shall be less than or equal to 0.05 as tested in accordance with ASTM C-1371 or ASTM E408.~~

~~A Installation shall conform to ASTM C1158 (*Standard Practice for Installation and Use of Radiant Barrier Systems (RBS) in Building Construction*), ASTM C727 (*Standard Practice for Installation and Use of Reflective Insulation in Building Constructions*), ASTM C1313 (*Standard Specification for Sheet Radiant Barriers for Building Construction Applications*), and ASTM C1224 (*Standard Specification for Reflective Insulation for Building Applications*), and the radiant barrier shall be securely installed in a permanent manner with the shiny side facing down toward the interior of the building (ceiling or attic floor). Moreover, radiant barriers shall be installed at the top chords of the roof truss/rafters in ***any*** of the following methods:~~

~~i. Draped over the truss/rafter (the top chords) before the upper roof decking is installed.~~
~~ii. Spanning between the truss/rafters (top chords) and secured (stapled) to each side.~~
~~iii. Secured (stapled) to the bottom surface of the truss/rafter (top chord). A minimum air space shall be maintained between the top surface of the radiant barrier and roof decking of not less than 1.5 inches at the center of the truss/rafter span.~~
~~iv. Attached [laminated] directly to the underside of the roof decking. The radiant barrier shall be laminated and perforated by the manufacturer to allow moisture/vapor transfer through the roof deck.~~

~~In addition, the radiant barrier shall be installed to cover all gable end walls and other vertical surfaces in the attic.~~

~~B The attic shall be ventilated to:~~
~~i. Conform to the radiant barrier manufacturer's instructions.~~
~~ii. Provide a minimum free ventilation area of not less than one square foot of vent area for each 150 square feet of attic floor area.~~
~~iii. Provide no less than 30 percent upper vents.~~

~~Ridge vents or gable end vents are recommended to achieve the best performance. The material should be cut to allow for full airflow to the venting.~~

~~C The radiant barrier (except for radiant barriers laminated directly to the roof deck) shall be installed to have a minimum gap of 3.5 inches between the bottom of the radiant barrier and the top of the ceiling insulation to allow ventilation air to flow between the roof decking and the top surface of the radiant barrier have a minimum of six (6) inches (measured horizontally) left at the roof peak to allow hot air to escape from the air space between the roof decking and the top surface of the radiant barrier.~~

~~D When installed in enclosed rafter spaces where ceilings are applied directly to the underside of roof rafters, a minimum air space of 1 inch shall be provided between the radiant barrier and the top of the ceiling insulation, and ventilation shall be provided for every rafter space. Vents shall be provided at both the upper and lower ends of the enclosed rafter space.~~

~~E The product shall meet all requirements for California certified insulation materials [radiant barriers] of the Department of Consumer Affairs, Bureau of Home Furnishings and Thermal~~

~~Insulation, as specified by CCR, Title 24, Part 12, Chapter 12-13, Standards for Insulating Material.~~

~~The use of a radiant barrier shall be listed in the Special Features and Modeling Assumptions listings of the CF-1R and described in detail in the ACM Compliance Supplement.~~

RA4.3 HVAC Measures

RA4.3.1 ~~Thermal/~~Ice Storage ~~DX AC~~Air Conditioner (ISAC) Systems [1]~~Eligibility Criteria~~

To ensure reliable energy savings and proper operation and control, the applicant worked with the staff to develop eligibility criteria and acceptance testing requirements. The low rise residential building eligibility criteria include third-party field verification of the ISAC's model number by a certified HERS rater and the requirement that duct sealing be completed for all low-rise residential building installations. The Acceptance Requirements call for installer verification of the presence and proper operation of required controls.

The builder or installer provides a Certificate of Compliance form showing the system that was used for determining performance standards compliance, and that duct sealing was specified for compliance.

The following eligibility criteria must be certified on the Installation Certificate and verified by a HERS rater on the Certificate of Field Verification and Diagnostic Testing form for residential buildings (See Appendix A).

1. The model number of the installed unit is for a unit that the Energy Commission has approved for compliance credit and matches the model number used for compliance credit.
2. The duct system has been sealed and tested as required by the Residential ACM Manuals.
3. No Thermostatic Expansion Valve (TXV) credit is taken if applicable.

The installing contractor shall complete the following acceptance testing and document the results to the Building Department using the Installation Certificate (See Appendix A).

1. Verify that building cooling is controlled by a standard indoor HVAC thermostat and not by factory-installed controls.
2. Verify that ice making is not controlled by the thermostat.
3. Verify that the water tank is filled to the proper level as specified by the manufacturer.
4. Verify that the correct model number is installed as indicated in compliance documents (including ice melt start time). Certify the installed model number on the CF-1R form.
5. Force the controls to indicate no demand for cooling, set the time to be within the nighttime time period, and simulate that the tank is not full with ice. Verify that the system operates properly in the ice-making mode (in other , it starts charging the tank and does not provide cooling to the building).
6. Force the controls to indicate no demand for cooling, set the time to be within the nighttime time period, and simulate the tank being full of ice. Verify that the system operates properly in the idle mode (i.e., the compressor is off, and no cooling is provided by the system).
7. Force the controls to indicate a demand for cooling and set the time to be within the daytime time period. Verify that the system operates properly in the ice melt mode (i.e., it starts discharging and that the compressor is off).

[1] Source: Description is taken from Ice Storage Air Conditioners, Compliance Options Application, Staff Report, May 2006, CEC-400-2006-006-San Francisco.

8. Force the controls to indicate a demand for cooling and set the time to be within the morning shoulder time period. Verify that the system operates properly in the direct cooling mode (i.e., the system is providing cooling with the compressor).
9. Force the controls to indicate no cooling load, and set the time to be within the daytime time period. Verify that the system operates properly in the idle mode (i.e., it does not provide cooling to the building and the compressor is off).
10. Force the controls to indicate a demand for cooling and set the time to be within the nighttime period. Verify that the cooling is provided by the compressor.

~~With the TDV energy, introduced in the 2005 Standards, TES systems including the DES/DXAC are eligible for significant credits depending on climate zones and building design. The following sections describe the requirements for obtaining the credit for DES/DXAC systems.~~

~~New or existing residential buildings can obtain compliance credits for the DES/DXAC for space cooling if the following eligibility criteria are met:~~

~~1.Eligible systems shall have:~~

- ~~Direct expansion air conditioning unit with a SEER of at least 13~~
- ~~A storage capacity not to exceed 100 Ton Hours~~
- ~~Power consumption not to exceed 150W per Ton during Ice Melt mode.~~
- ~~Compatibility with standard condensers and evaporator coils.~~

~~2.Integrated controls shall be installed which are capable of:~~

- ~~Establishing Nighttime and Daytime time periods.~~
- ~~Initiating the ice make process as late as possible, but in time to build a full store of ice before the end of the Nighttime period.~~
- ~~Initiating the DES/DXAC ice melt process whenever there is a cooling load during the factory-set Daytime period in the non-Winter months. Provide Direct Cooling to serve a cooling demand at all other times.~~
- ~~Prohibiting any user configurable option which could impact TDV performance or compliance~~
- ~~Operating with (being controlled by) a standard HVAC thermostat.~~
- ~~Providing for a factory-set period of time during which the system disables Ice Make and Ice Melt modes.~~

~~3.User Interface~~

- ~~Must operate without any direct user interaction.~~
- ~~User's operation of HVAC system must be identical to how it would be without a DES/DXAC system.~~

~~4.Performance data is provided by manufacturer based on the test procedures described later in this document.~~

~~5.No TXV credit.~~

~~6.Building types low-rise residential~~

RA4.3.2 Evaporatively-Cooled Condensing Units

The eligibility criteria require the measures listed below. These measures must be certified by the installer on the Acceptance Certificate and verified by a HERS rater and certified on the Certificate of Verification.

• EER at 95°F dry bulb and 75°F wet bulb temperature is listed with ARI (generally called EERa).

• EER at 82°F dry bulb and 65°F wet bulb temperature is submitted to ARI and published by the manufacturer in accordance with ARI guidelines (generally called EERb).

• Presence of TXV is verified, if the ARI certified EERs are based on equipment with TXVs.

• Ducts are tested and sealed in all installations of this equipment.

• Proper refrigerant charge is verified if compliance credit is taken for this measure when TXVs are not installed.

RA4.4 Water Heating Measures

RA4.4.1 Proper installation of pipe insulation

Unless otherwise stated, insulation must meet the requirements specified in Section 150(j) of the Standards. Pipe insulation may be omitted when the pipe is buried within attic, crawlspace or exterior wall insulation, if the installation of piping in these locations is allowed by local ordinance. In attics and crawlspaces the insulation shall completely cover the pipe to the minimum R-value specified in Section150(j) and there shall be at least 3 inches of insulation further away from the conditioned space. In exterior walls, the insulation must completely surround the pipe with a thickness that is a minimum R-value specified in Section 150(j) of the Standards. If burial within the insulation will not completely or continuously surround the pipe, then pipe insulation of a minimum of R-4 shall be installed. All pipes below grade must meet the requirements of Insulated Pipes Below Grade.

RA4.4.2 Mandatory Pipe Insulation

Pipe insulation on the first five feet of hot and cold water piping from storage gas water heaters is a mandatory measure as specified in Section 150 (j) of the Standards. Note that exceptions 3, 4 and 5 to Section 150 (j) apply to all pipe insulation that is required to meet the mandatory measure requirement or that is eligible for compliance credit.

Pipe insulation credit available if all remaining hot water lines are insulated. Insulation shall meet mandatory minimums in Section 150 (j) of the Standards.

All plumbing located in attics with a continuous minimum of 4 in. of blown insulation coverage on top of the piping will be allowed to claim the "all lines" pipe insulation credit, provided that:

1. Piping from the water heater to the attic, and
2. Piping in floor cavities or other building cavities are insulated to the minimum required for pipe insulation credit.

RA4.4.3 Standard Kitchen (STD)

In standard plumbing configurations the piping to the kitchen fixtures (dishwasher and sink(s)) must be insulated to comply with Section 151(f)8D of the Standards and be installed in accordance with Proper Installation of Pipe Insulation.

RA4.4.4 Pipe Insulation Credit (PIC)

All piping in the hot water distribution system must be insulation from the water heater to the wall behind each fixture or appliance and be in accordance with Proper Installation of Pipe Insulation.

RA4.4.5 Insulated Pipes Below Grade (IPBG)

All piping installed below grade that meet this requirement must be insulated to the levels mandated in Section 150(j). In addition all below grade piping must be installed with a protective sleeve that will prevent crushing of the insulation and is water proof. For kitchen island sinks or any other island fixtures or appliances the last 15 feet of pipe below grade may be insulated with 3/8 inch wall thickness insulation.

RA4.4.6 Uninsulated Pipes Below Grade (UPBG)

Any below grade piping system which does not meet the requirements for Insulated Pipes Below Grade must use the distribution multiplier for Uninsulated Pipes Below Grade.

RA4.4.7 Parallel Piping (PP)

The length of pipe from the water heater to the manifold shall not exceed 15 feet and shall be insulated to meet the requirements of Section 150(j) installed in accordance with Proper Installation of Pipe Insulation. Hot and cold supply runs shall not be bundled together and must be separated by at least six inches unless they are insulated to meet the requirements of Section 150(j) and be installed in accordance with Proper Installation of Pipe Insulation. In addition, piping from the manifold to the fixtures and appliances must take the most direct path. The entire length of pipe from the water heater to the manifold and from the manifold to the kitchen fixtures must be insulated to meet the requirements of Section 150(j) of the Standards and be installed in accordance with Proper Installation of Pipe Insulation.

RA4.4.8 Point of Use (POU)

Current requirements apply. All hot water fixtures in the dwelling unit, with the exception of the clothes washer, must be located within 8' (plan view) of a point of use water heater. To meet this requirement, some houses will require multiple POU units.

RA4.4.9 Recirculation Systems

RA4.4.9.1 Installation requirements for all recirculation systems

The entire circulation loop in a recirculation system must be insulated to a level that meets the requirements of Section 150(j) of the Standards and be installed in accordance with Proper Installation of Pipe Insulation. These systems must have a dedicated return line. A check valve shall be installed in the recirculation loop to prevent unintentional circulation of the water (thermo-siphoning) and back flow when the system is not operating. This check valve may be included with the pump

The recirculation loop must be laid out to be within 8 feet (plan view) of all hot water fixtures in the house (with the exception of the clothes washer). The circulation loop should be located to minimize the volume of water in the loop and so that there is no more than 15 feet of pipe from the loop to any fixture or appliance.

An automatic air release valve shall be installed on the recirculation loop piping on the inlet side of the recirculation pump and no more than 4 feet from the pump. This valve shall be mounted on top of a vertical riser at least 12" in length and shall be accessible for replacement and repair. Optionally; a bleeder valve can be installed on the outlet side of the recirculation pump.

Recirculation systems may take the Pipe Insulation Credit (PIC) if all piping between the circulation loop and all fixtures and appliances is insulated to a level that meets the requirements of Section 150(j) of the Standards and be installed in accordance with Proper Installation of Pipe Insulation.

RA4.4.9.2 Approved recirculation controls include the following:

Recirculation no controls (RNC)

Recirculation systems with no controls must be installed in accordance with the -Installation requirements for all recirculation systems.

Recirculation with timer controls (RTm)

Recirculation systems with timer controls must be installed in accordance with the Installation requirements for all recirculation systems. Time control must have an operational timer initially set to operate the pump no more than 16 hours per day. The timer controls must include automatic resets or a signal function to prevent operation off schedule in the event of a power failure.

Recirculation with temperature control (RTmp)

Recirculation systems with temperature controls must be installed in accordance with the Installation requirements for all recirculation systems. Temperature control must have a temperature sensor with a maximum 20°F deadband installed on the return line.

Recirculation with time and temperature controls (RTmTmp)

Recirculation systems with time and temperature controls must be installed in accordance with the Installation requirements for all recirculation systems. These systems must meet the requirements for both individual time and temperature controls systems.

Demand Recirculation (RDmd)

Demand recirculation systems must be installed in accordance with the Installation requirements for all recirculation systems. Demand controlled recirculation systems shall operate "on-demand", meaning that the pump shall be able to receive a signal to turn on from a user shortly prior to the desired hot water draw. The controls shall be electronic and operate on the principal of shutting off the pump with a rise in temperature (Delta-T). If the thermo-sensor that measures temperature rise fails to operate, the electronic controls must have a lock out to prevent operation above 105°F degrees. The electronic controls shall also have a fail safe timer to prevent extended operation of the pump if the sensor fails or is damaged. One activation mechanism (wired or wireless button or motion sensor) shall be installed for each hot water location where there is an open drain. Motion sensors shall make a momentary contact when motion is sensed. After the signal is sent, the sensor shall go into a lock out mode for a short period of time to prevent sending a signal to the electronic controls while the circulation loop is still hot. Either a dedicated return line shall be installed, or the cold water line may be used as a temporary return. A dedicated return line shall be installed if motion sensors are used to activate the pump.

Temperature buffering tank(TBT)

Temperature buffering tanks are small storage tanks (typically under 5 gallons) that are installed down line from the primary water heater. Any temperature buffering tank that has an electric resistance heating element must use the temperature buffering storage tank distribution multiplier.

RA4.4.10 Solar Water Heating Systems

Solar water heating systems for i~~I~~ndividual dwellings shall be rated~~ated~~ with the OG 300 Procedure.

In order to use the OG-300 method, the system must satisfy the following eligibility criteria:

1. The collectors must face within 35 degrees of south and be tilted at a slope of at least 3:12
2. The system shall be SRCC certified.
3. The system must be installed in the exact configuration for which it was rated, e.g. the system must have the same collectors, pumps, controls, storage tank and backup water heater fuel type as the rated condition.
4. The system must be installed according to manufacturer's instructions.
5. The collectors shall be located in a position that is not shaded by adjacent buildings or trees between 9:00 AM and 3:00 PM (solar time) on December 21.

RA4.5 Other Measures

RA4.5.1 Controlled Ventilation Crawlspace (CVC)

Drainage. Proper enforcement of site engineering and drainage, and emphasis on the importance of proper landscaping techniques in maintaining adequate site drainage, is critical.

Ground Water And Soils. Local ground water tables at maximum winter recharge elevation should be below the lowest excavated site foundation elevations. Sites that are well drained and that do not have surface water problems are generally good candidates for this stem-wall insulation strategy. However, the eligibility of this alternative insulating technique is entirely at the building officials' discretion. Where disagreements exist, it is incumbent upon the applicant to provide sufficient proof that site drainage strategies (e.g., perimeter drainage techniques) will prevent potential problems.

Ventilation. All crawl space vents must have automatic vent dampers to receive this credit. Automatic vent dampers must be shown on the building plans and installed. The dampers should be temperature actuated to be fully closed at approximately 40°F and fully open at approximately 70°F. Cross ventilation consisting of the required vent area reasonably distributed between opposing foundation walls is required.

Foam Plastic Insulating Materials. Foam plastic insulating materials must be shown on the plans and installed when complying with the following requirements:

Fire Safety—UBC Section 1712(b)2. Products shall be protected as specified. Certain products have been approved for exposed use in under floor areas by testing and/or listing.

Direct Earth Contact—Foam plastic insulation used for crawl-space insulation having direct earth contact shall be a closed cell water resistant material and meet the slab-edge insulation requirements for water absorption and water vapor transmission rate specified in the mandatory measures.

RA4.5.2 Mineral Fiber Insulating Materials

Fire Safety—UBC Section 1713(c). "All insulation including facings, such as vapor barriers or breather papers installed within ... crawl spaces ... shall have a flame-spread rating not to exceed 25 and a smoke density not to exceed 450 when tested in accordance with UBC. Standard No. 42-1." In cases where the facing is also a vapor retarder, the facing shall be installed to the side that is warm in winter.

Direct Earth Contact—Mineral fiber batts shall not be installed in direct earth contact unless protected by a vapor retarder/ground cover.

Vapor Barrier (Ground Cover). A ground cover of 6 mil (0.006 inch thick) polyethylene, or approved equal, shall be laid entirely over the ground area within crawl spaces.

The vapor barrier shall be overlapped six inches minimum at joints and shall extend over the top of pier footings.

The vapor barrier should be rated as 1.0 perm or less.

The edges of the vapor barrier should be turned up a minimum of four inches at the stem wall.

Penetrations in the vapor barrier should be no larger than necessary to fit piers, beam supports, plumbing and other penetrations.

The vapor barrier must be shown on the plans and installed.

Studies show that moisture conditions found in crawl spaces that have minimal ventilation do not appear to be a significant problem for most building sites provided that the crawl-space floors are covered by an appropriate vapor barrier and other precautions are taken. The Energy Commission urges building officials to carefully evaluate each application of this insulating technique in conjunction with reduced ventilation because of the potential for adverse effects of surface water on crawl-space insulation that could negate the energy savings predicted by the procedure. ~~(blank)~~

Residential Appendix RA5 – 2008

Appendix RA5 – Interior Mass Capacity

RA5.1 Scope and Purpose

Interior Mass Capacity (IMC) is a measure of the total thermal mass in a low-rise residential building. IMC is used to determine if a building qualifies as a high mass building. Credit for thermal mass in the *Proposed Design* may only be considered when the *Proposed Design* qualifies as a high mass building. A high mass building is one with thermal mass equivalent to having 30 percent of the conditioned slab floor exposed and 15 ~~%~~percent of the conditioned non-slab floor exposed two inch thick concrete.

RA5.2 Calculating Interior Mass Capacity (IMC)

The IMC for the building is calculated using Equation RA5-1. The IMC for the building is the sum of the area of each mass material multiplied times its Unit Interior Mass Capacity (UIMC). Table RA5-1, Table RA5-2, and Table RA5-3 give UIMC values for a number of common thermal mass materials. This method allows for multiple mass types common in low-rise residential construction.

Equation RA5~~B~~-1

$$IMC = \sum_{I=1}^{n} A_I \times UIMC_I$$

where

IMC = Interior thermal mass of the building

A_i = Surface area of the ith material

$UIMC_i$ = Unit Interior Mass Capacity (UIMC) of the ith material selected from Table RA5-1, Table RA5-2, and Table RA5-3

N = Number of thermal mass materials in the *Proposed Design*

RA5.3 IMC Threshold for a High Mass Building

In order to qualify as a high mass building, the *Proposed Design* must have an IMC greater than or equal to that determined from Equation RA5-2. The IMC threshold is based on 30~~%~~ percent of the conditioned slab area (CSA) being exposed (UIMC=4.6); 70~~%~~ percent of the CSA being covered (UIMC=1.8); and 15~~%~~ percent of the conditioned non-slab floor area as exposed two inch thick concrete (UIMC=2.5).

Equation RA5~~B~~-2

$$\begin{aligned} IMC_{Threshold} &= 0.3 \times 4.6 \times CSA + 0.7 \times 1.8 \times CSA + 0.15 \times 2.5 \times (CFA - CSA) \\ &= 2.640 \times CSA + 0.375 \times (CFA - CSA) \end{aligned}$$

where:

CSA = Conditioned Slab floor Area

CFA = Total Conditioned Floor Area

Table RA5-~~B~~1 – Interior Mass UIMC Values: Interior Mass[1] Surfaces Exposed on One Side[13]

Material	Surface Condition	Mass Thickness (inches)	Unit Interior Mass Capacity
Concrete Slab-on-Grade and Raised Concrete Floors	Exposed[1]	2.00	3.6
		3.50	4.6
		6.00	5.1
	Covered[2]	2.00	1.6
		3.50	1.8
		6.00	1.9
Lightweight Concrete[9]	Exposed	0.75	1.0
		1.00	1.4
		1.50	2.0
		2.00	2.5
	Covered	0.75	0.9
		1.00	1.0
		1.50	1.2
		2.00	1.4
Solid Wood[9]	Exposed	1.50	1.2
		3.00	1.6
Tile[3,9]	Exposed	0.50	0.8
		1.00	1.7
		1.50	2.4
		2.00	3.0
Masonry[4,9]	Exposed	1.00	2.0
		2.00	2.7
		4.00	4.2
Adobe[9]	Exposed	4.00	3.8
		6.00	3.9
		8.00	3.9
Framed Wall	0.50" Gypsum	na	0.0
	0.63" Gypsum	na	0.1
	1.00" Gypsum	na	0.5
	0.88" Stucco	na	1.1
Masonry Infill[7]	0.50" Gypsum	3.50	1.3

Table RA5-~~B~~2 – Interior Mass UIMC Values: Interior Mass[11] - Surfaces Exposed on Two Sides[5, 13]

Material	Surface Condition	Mass Thickness (inches)	Unit Interior Mass Capacity
Partial Grout Masonry[4]	Exposed[1]	4.00	6.9
		6.00	7.4
		8.00	7.4
Solid Grout Masonry[4,6]	Exposed	4.00	8.3
		6.00	9.2
		8.00	9.6
Adobe	Exposed	4.00	7.6
		12.00	7.8
		16.00	7.6
Solid Wood/ Logs	Exposed	3.00	3.3
		4.00	3.3
		6.00	3.3
		8.00	3.3
Framed Wall	0.50" Gypsum	na	0.0
	0.63" Gypsum	na	0.2
	1.00" Gypsum	na	0.9
	0.88" Stucco	na	2.1
Masonry Infill[7]	0.50" Gypsum	3.50	2.6

Table RA5-B3 – Exterior Wall Mass UIMC Values[13]

Material	Surface Condition	Mass Thickness (inches)	Wall U-value	Unit Interior Mass Capacity
Solid Wood/	Exposed[1]	3.00	0.22	0.7
Logs		4.00	0.17	0.9
		6.00	0 .12	1.1
		8.00	0.093	1.2
		10.00	0.075	1.3
		12.00	0.063	1 .3
Wood Cavity Wall[12]	Exposed	3.00[12]	0.11	1.1
			0.065	1.3
			0.045	1.4
Adobe	Exposed	8.00	0.35	2.1
		16.00	0.21	2.8
		24.00	0.15	3.1
Masonry Veneer[4]	Framed Wall	4.00	0.10	na
			0.08	na
			0.06	na
Adobe Veneer	Framed Wall	4.00	0.10	na
			0.08	na
			0.06	na
Partial Grout Masonry[4]	Exposed[1]	4.00	0.68	0.9
			0.58	1.0
		6.00	0.54	1.3
			0.44	1.5
		8.00	0.49	1.5
			0.38	1.7
	Furred[10]	4.00	0.40	0.5
			0.30	0.5
			0.20	0.5
			0.10	0.5
			0.08	0.5
		6.00	0.40	0.9
			0.30	0.6
			0.20	0.5
			0.10	0.5
			0.08	0.5
		8.00	0.30	0.8
			0.20	0.5
			0.10	0.5
			0.08	0.5

Table RA5-3: Exterior Wall Mass UIMC Values (continued)[13]

Material	Surface Condition	Mass Thickness (inches)	Wall U-value	Unit Interior Mass Capacity
Solid Grout Masonry[4,6]	Exposed	4.00	0.79	1.0
		6.00	0.68	1.5
		8.00	0.62	1.8
	Furred[10]	4.00	0.40	0.5
			0.30	0.5
			0.20	0.5
			0.10	0.5
			0.08	0.5
		6.00	0.40	0.7
			0.30	0.5
			0.20	0.5
			0.10	0.5
			0.08	0.5
		8.00	0.40	0.8
			0.30	0.6
			0.20	0.5
			0.10	0.5
			0.08	0.5

RA5.4 Table Notes

1. "Exposed" means that the mass is directly exposed to room air or covered with a conductive material such as ceramic tile.
2. "Covered" includes carpet, cabinets, closets or walls.
3. The indicated thickness includes both the tile and the mortar bed, when applicable.
4. Masonry includes brick, stone, concrete masonry units, hollow clay tile and other masonry.
5. The unit interior mass capacity for surfaces exposed on two sides is based on the area of one side only.
6. "Solid Grout Masonry" means that all the cells of the masonry units are filled with grout.
7. The indicated thickness for masonry infill is for the masonry material itself.
8. Use the Exterior Mass value for calculating Exterior Wall Mass.
9. Mass located inside exterior walls or ceilings may be considered interior mass (exposed one side) when it is insulated on the exterior with at least R-11 insulation, or a total resistance of R-9 including framing effects.
10. "Furred" means that 0.50-inch gypsum board is placed on the inside of the mass wall separated from the mass with insulation or an air space.
11. When mass types are layered, e.g. tile over slab-on-grade or lightweight concrete floor, only the mass type with the greatest interior mass capacity may be accounted for, based on the total thickness of both layers.
12. This wall consists of 3 inches of wood on each side of a cavity. The cavity may be insulated as indicated by the U-value column.
13. Values based on properties of materials listed in 1993 ASHRAE Handbook of Fundamentals.

Nonresidential Appendix NA1 – 2008

Appendix NA1 – Nonresidential HERS Documentation and Enforcement Procedures

~~NA1.1Duct Efficiency Improvements~~

~~The Commission has approved algorithms and procedures for determining HVAC air distribution system (duct) efficiency for non-residential single-zone packaged equipment units serving 5000 ft^2 or less via ductwork that is installed in buffer spaces or unconditioned areas.. Details of the energy efficiency calculations are presented in Appendix NG.~~

~~Section 144(k) of the Standards sets a prescriptive requirement for HERS rater diagnostically tested and field verified duct sealing for duct systems that meet the following criteria (note this is a subset of the duct systems for which the ACM calculations shall be applied):~~

1. ~~Connected to constant volume, single zone, air conditioners, heat pumps or furnaces, and~~
2. ~~Serving less than 5,000 square feet of floor area; and~~
3. ~~Having more than 25% duct surface area located in one or more of the following spaces:~~
   - ~~A. Outdoors, or~~
   - ~~B. In a space directly under a roof where the U-factor of the roof is greater than the U-factor of the ceiling, or~~
   - ~~C. In a space directly under a roof with fixed vents or openings to the outside or unconditioned spaces, or~~
   - ~~D. In an unconditioned crawlspace; or~~
   - ~~E. In other unconditioned spaces.~~

~~This requirement applies to new buildings and to additions. Section 149(b)1.D sets a requirement for HERS rater diagnostically tested and field verified duct sealing for alterations of existing buildings where a new duct system is being installed or an existing duct system is being replaced for duct systems meeting the same criteria. Section 149(b)1.E sets a requirement for HERS rater diagnostically tested and field verified duct sealing for existing duct systems in duct systems meeting the same criteria when the space conditioning system is being installed or replaced, including replacement or installation of an air handler, cooling or heating coil, or furnace heat exchanger. Section 124 sets a mandatory minimum duct insulation requirement of R-8 for duct systems meeting the same criteria.~~

~~There are two calculation procedures to determine HVAC system air distribution (duct) efficiency using either: 1) default input assumptions, or 2) values based on HERS rater diagnostic testing and field verification. Duct efficiencies shall be calculated for each hour of the year according to the procedure in Nonresidential ACM Appendix ND. The compliance software shall require the user to choose values for the following parameters to calculate duct efficiencies: duct insulation level and duct leakage level.~~

~~For duct systems in new buildings and additions meeting the section 144(k) criteria, the compliance software shall assume R-8 duct insulation and duct leakage of 8% of fan flow for the standard design. For the proposed design the same R-8 duct insulation value shall be used since that is a mandatory requirement. When the documentation author specifies duct sealing, which requires HERS rater field verification and diagnostic testing, the proposed design for duct leakage shall be the same as the standard design. If the documentation does not specify duct sealing, the proposed design shall be the default value for duct leakage of 36% of fan flow.~~

~~For new or replacement duct systems in existing buildings meeting the Section 144(k) criteria, the compliance software shall assume R-8 duct insulation for the new or replaced ducts, and if the new or replaced ducts make up only a portion of the duct system, the compliance software shall assume R-4.2 duct insulation for the existing ducts. The proposed design shall use the same R-8 duct insulation for the new or replaced ducts and the actual installed duct insulation for the existing ducts. The compliance softwareshall assume duct leakage of 17% of fan flow for the standard design for new or replacement duct systems, including existing portions of the duct system. When the documentation author specifies duct sealing meeting the requirements of Section 149(b)1.D, including HERS rater field verification and diagnostic testing, the proposed design for duct leakage shall be the same as the standard design. If the documentation does not specify duct sealing, the proposed design shall be the default value of duct leakage of 36% of fan flow.~~

~~For existing duct systems in existing buildings meeting the Section 144(k) criteria, the compliance software shall assume R-4.2 duct insulation and duct leakage of 17% of fan flow. The proposed design shall assume either R-4.2 duct insulation or the actual installed duct insulation. The compliance software shall assume duct leakage of 17% of fan flow for the standard design for new or replacement duct systems, including existing portions of the duct system. When the documentation author specifies duct sealing meeting the requirements of Section 149(b)1.E, including HERS rater field verification and diagnostic testing, the proposed design for duct leakage shall be the same as the standard design. If the documentation does not specify duct sealing, the proposed design shall be the default value for duct leakage of 36% of fan flow.~~

~~For duct systems for single-zone individual packaged equipment serving 5000 ft^2 or less via ductwork that is installed in spaces that are not directly conditioned, which do not meet the Section 144(k) criteria, the compliance softwareshall assume R4.2 duct insulation for the standard design. The proposed design shall assume either R4.2 or the actual installed duct insulation. The compliance software shall assume the default value for duct leakage of 36% of fan flow. When the documentation author specifies duct sealing, including HERS rater field verification and diagnostic testing, the proposed design shall assume duct leakage of 8% of fan flow for duct systems in new buildings and additions meeting the duct leakage requirements of Section 144(k), and duct leakage of 17% for duct systems in existing buildings meeting the duct leakage requirements of Sections 149(b)1.D or 149(b)1.E.~~

~~The compliance software shall automatically determine whether duct systems are for single-zone individual packaged equipment serving 5000 ft^2 or less via ductwork that is installed in spaces that are not directly conditioned, and whether such duct systems meet the criteria of Section 144(k). This determination shall be made based on inputs required for analyzing other HVAC features or inputs created especially to make this determination. The compliance software shall automatically use the following values from the description of the proposed design when calculating the distribution system (duct) efficiency:~~

- ~~Number of stories~~
- ~~Building Conditioned Floor Area~~
- ~~Building Volume~~
- ~~Outdoor summer and winter design temperatures for each climate zone~~

~~When more than one HVAC system serves the building, the HVAC distribution efficiency is determined for each system and is applied to the energy consumption of each system.~~

~~Duct sealing shall be listed as *HERS Verification Required* features on the *Performance Certificate of Compliance* (PERF-1) and the *Mechanical Compliance Summary* (MECH-1MECH-1-C), and Air Distribution Acceptance*Mechanical Distribution Summary* (MECH-5MECH-5-A). Field verification and diagnostic testing constitutes "eligibility and installation criteria" for duct sealing. Field verification and diagnostic testing of duct sealing shall be described in the *Compliance Supplement*.~~

NA1.1 California Home Energy Rating Systems

Compliance credit for duct sealing of HVAC systems covered by sections 144(k), 149(b)1.D, and 149(b)1.E of the Standards requires field verification and diagnostic testing of as-constructed duct systems by a certified HERS rater, using the testing procedures in Appendix NA2. The Commission approves HERS providers,

subject to the Commission's HERS Program regulations, which appear in the California Code of Regulations, Title 20, Chapter 4, Article 8, Sections 1670-1676. Approved HERS providers are authorized to certify HERS raters and maintain quality control over field verification and diagnostic testing. When field verification and diagnostic testing of specific energy efficiency improvements are a condition for those improvements to qualify for Title 24 compliance credit, an approved HERS provider and certified HERS rater shall be used to conduct the field verification and diagnostic testing. HERS providers and raters shall be considered special inspectors by building departments, and shall demonstrate competence, to the satisfaction of the building official, for field verifications and diagnostic testing. The HERS provider and HERS rater shall be independent entities from the builder or subcontractor installer of the energy efficiency improvements being tested and verified and shall have no financial interest in the installation of the improvements. Third-party quality control programs approved by the Commission may serve some of the functions of HERS raters for field verification and diagnostic testing purposes as specified in Section NA1.5.

The remainder of this chapter describes the:

- Required documentation and communication steps.
- Responsibilities assigned to each of the parties involved in the field verification and diagnostic testing process.
- Requirements for installation certification and certification of acceptance.
- Requirements for HERS rater field verification and diagnostic test documentation and enforcement procedures.
- Requirements for sampling procedures.
- Requirements for Third Party Quality Control Programs.
- Requirements for HERS compliance when performing alterations.

NA1.2 Summary of Documentation and Communication

The documentation and communication process for duct sealing field verification and diagnostic testing is summarized below. The subsequent sections of this chapter contain additional information and requirements that apply to all situations; however the section on alterations, NA1.5, applies specifically to the differences in the requirements for alterations. Section NA1.6 applies specifically to the differences in the requirements for Third Party Quality Control Programs.

- The documentation author and the principal mechanical designer shall complete the compliance documents for the building. The documentation author shall submit the certificate of compliance information in electronic format to a HERS provider's data registry to register the document data. After submittal of the Certificate of Compliance information, the documentation author shall access the registered Certificate of Compliance from the provider's data registry for submittal to the builder. Refer to Appendix JA1 for the definitions for "HERS provider data registry", and for "registered document".
- The documentation author or the principal mechanical designer shall provide a signed registered Certificate of Compliance to the builder, which indicates that duct sealing with HERS rater diagnostic testing and field verification is required for compliance, and displays the unique registration number assigned by the provider data registry. The registered Certificate of Compliance shall be approved/signed by the principal designer/owner prior to submittal to the building department for filing with the building plans. The certification signatures may be original wet signatures on paper documents, or electronic signatures on electronic documents.
- The builder or principal mechanical designer shall make arrangements for transmittal of a signed copy of the registered Certificate of Compliance, for units that have features requiring HERS verification, to the data registry of a HERS provider. The builder shall also arrange for the services of a certified HERS rater prior to installation of the duct system, so that once the installation is complete the HERS rater has ample time to complete the field verification and diagnostic testing without delaying final approval of occupancy by

the building department. The builder or principal mechanical designer shall make available to the HERS rater a copy of the registered Certificate of Compliance that was approved/signed by the principal designer/owner and submitted to the building department. The registered copies submitted to the HERS provider and to the HERS rater may be in paper or electronic format.

- The builder or subcontractor shall install the duct system(s) that require field verification and diagnostic testing. The builder or the installing subcontractor shall perform diagnostic testing according to the procedures specified in Section NA1.4. When the installation is complete, the builder or the installing subcontractor shall make arrangements for transmittal of the Installation Certificate information to the HERS provider data registry. After submittal of the Installation Certificate information, the builder or subcontractor shall access the registered Installation Certificate portion of the Certificate of Acceptance from the provider's data registry, sign the installer's portion of the registered Certificate of Acceptance, post a copy at the building site for review by the building inspector, and submit a copy to the building department for filing with the plans. Alternatively, the enforcement agency shall authorize the submittal of signed copies of the registered Certificate(s) of Acceptance for retention to a HERS provider's data registry. These filings may be paper or electronic documents. The builder or subcontractor shall also provide a signed copy of the installer's portion of the registered Certificate of Acceptance to the HERS rater. The copies submitted to the rater may be in paper or electronic format.
- The HERS rater shall confirm that transmittal to the HERS provider's data registry of the Certificate of Compliance information, and the Installation Certificate information has been completed, for each unit having features requiring HERS verification. The HERS rater shall complete the field verification and diagnostic testing as specified in Section NA1.5, The HERS rater shall enter the test results into the HERS provider's data registry.
- The HERS provider shall make available registered copies of the HERS rater's portion of the Certificate of Acceptance -to the HERS rater, builder, and building department.
- The building department shall not approve a building with individual single zone package space conditioning equipment for occupancy until the building department has received a registered copy of the Certificate of Acceptance installation certification that has been signed by the builder/owner or subcontractor, and a registered copy of the HERS verification portion of the Certificate of Acceptance that has been signed by the HERS rater, or has confirmed that the enforcement agency's authorized submittal to the HERS provider data registry of the documents has been completed. The HERS provider shall make document verification services available, via phone or internet communications interface, to building departments, builders and contractors, HERS raters, the Energy Commission, and other authorized users of the provider data registry. The HERS provider shall insure that the Certificate of Compliance, and Certificate of Acceptance certification information and approval signatures are retained per Title 20 Section 1673(d).

NA1.3 Summary of Responsibilities

This section summarizes responsibilities set forth in this chapter and organizes them by the responsible party. **This section is not, however, a complete accounting of the responsibilities of the respective parties.**

NA1.3.1 Builder

The builder shall make arrangements for transmittal of the registered Certificate of Compliance information, for features requiring HERS verification, to the data registry of a HERS provider. The builder shall make arrangements for the services of a certified HERS rater prior to installation of the duct systems, so that once the installation is complete the HERS rater has ample time to complete the field verification and diagnostic testing without delaying final approval of occupancy building permit by the building department. The Builder shall provide to the HERS Rater a copy of the registered Certificate of Compliance that was approved/signed by the principal designer/owner and submitted to the building department.

The builder's employees or subcontractors responsible for completing the performance of the installation diagnostic testing, as specified in Section NA1.4, shall sign the registered installation certification portion of the Certificate of Acceptance to certify the diagnostic testing results and that the installation work meets the requirements for compliance credit shown on the Certificate of Compliance. The builder or subcontractor shall post a copy of the registered installation certification portion of the Certificate of Acceptance at the construction site for review by the building inspector, and submit a signed copy of the installation certification portion of the Certificate of Acceptance to the building department in conjunction with requests for final inspection for each dwelling unit. Alternatively, the building department shall authorize the submittal a signed copy of the registered Certificate(s) of Acceptance for retention to a HERS provider's data registry. These filings may be paper or electronic documents. The builder or subcontractor shall also provide a copy of the installation certification portion of the Certificate of Acceptance to the HERS rater.

If the builder chooses to utilize group sampling for HERS compliance, the builder or the HERS rater shall identify the units to be included in the sample group for field verification and diagnostic testing. The builder shall arrange for the submittal of a registered copy of the HERS verification portion of the Certificate of Acceptance signed and dated by the HERS rater to the building official in conjunction with requests for final inspection for each individual single zone package space conditioning equipment unit.

NA1.3.2 HERS Provider and Rater

The HERS provider shall maintain a list of the space conditioning units in the group from which sampling is drawn, the units selected for sampling, the units sampled and the results of the sampling, the units selected for re-sampling, the units that have been tested and verified as a result of re-sampling, and the corrective action taken. The provider shall retain records of all information content and approval signatures for completed Certificate of Compliance forms, completed installer certification portions of Certificate of Acceptance forms, and completed HERS verification portions of the Certificate of Acceptance forms for a period of five years per Title 20 section 1673(d).

The HERS rater providing the diagnostic testing and verification shall transmit the test results to the HERS provider data registry. A registered copy of the HERS verification portion of the Certificate of Acceptance from the provider, -signed by the rater, shall be provided for the tested unit and each of up to six other units from a designated group for which compliance is verified based on the results of a sample (or up to 29 other units under a Third Party Quality Control Program). The HERS provider's registered copy of the HERS verification portion of the Certificate of Acceptance shall be made available or submitted to the HERS rater, the builder, and the building department.

The HERS rater shall produce a separate Certificate of Field Verification and Diagnostic Testing for each unit that meets the diagnostic requirements for compliance. The registered Certificate of Field Verification and Diagnostic Testing shall have unique HERS provider-designated identifiers for lot location, certification number, and sample group number, and shall include the building permit number, time and date stamp by the rater, provider logo or seal, and indicate if the space conditioning unit has been tested or if it was an untested unit approved as part of sample testing. The HERS rater shall not sign a Certificate of Field Verification and Diagnostic Testing for a building with a space conditioning unit that does not have the installer's portion of the Certificate of Acceptance signed by the installer as required in Section NA1.4.

If field verification and diagnostic testing on a sampled space conditioning unit identifies a failure to meet the requirements for compliance credit, the HERS rater shall report to the HERS provider, the builder, and the building department that re-sampling will be required.

If re-sampling identifies another failure, the HERS rater shall report to the HERS provider, the builder, and the building department that corrective action, diagnostic testing, and field verification will be required for all the untested space conditioning units in the group. The report shall identify each space conditioning unit that shall be fully tested and corrected.

The HERS provider shall also report to the builder when diagnostic testing and field verification has shown that the failures have been corrected for all of the space conditioning units.

When individual space conditioning unit testing and verification confirms that the requirements for compliance have been met, the HERS provider shall make available to the builder and the building department a registered copy of the HERS verification portion of the Certificate of Acceptance for each space conditioning unit in the group.

The HERS provider shall file a report with the building department if there has been a sample group failure, explaining all actions taken (including field verification, testing, and corrective actions) to bring into compliance space conditioning units for which full testing has been required.

NA1.3.3 Third-Party Quality Control Program

An approved third-party quality control program shall:

- Provide training to participating program installing contractors, installing technicians, and specialty third party quality control program subcontractors regarding compliance requirements for measures for which diagnostic testing and field verification are required,
- Collect data from participating installers for each installation completed for compliance credit,
- Complete data checking analysis to evaluate the validity and accuracy of the data to independently determine whether compliance has been achieved,
- Provide direction to the installer to retest and correct problems when data checking determines that compliance has not been achieved,
- Require resubmission of data when retesting and correction is directed, and
- Maintain a database of all data submitted in a format that is acceptable to the Commission and available to the Commission upon request.

The third-party quality control program provider shall arrange for the services of an independent HERS rater to conduct independent field verifications of the installation work performed by the participating installing contractor and the Third Party Quality Control Program, completing all of the responsibilities of a HERS rater as specified in this Chapter with the exception that sampling shall be completed for a group of up to 30 space conditioning units, and sampling and re-sampling shall be completed for a minimum of one out of every 30 sequentially completed units from the group.

NA1.3.4 Building Department

The building department at its discretion may require independent testing and field verification to be scheduled so that it can be completed in conjunction with the building department's required inspections. The building department may also require that it observe the diagnostic testing and field verification performed by builders or subcontractors and the certified HERS rater in conjunction with the building department's required inspections to corroborate the results documented in installer certifications and HERS rater field verifications on the Certificate of Acceptance.

For space conditioning units that have used a compliance alternative that require field verification and diagnostic testing, the building department shall not approve a building with individual single zone package space conditioning equipment for occupancy until the building department has received a registered Certificate of Acceptance installation certification that has been signed by the builder/owner or installing subcontractor, and a registered copy of the Certificate of Acceptance Field Verification and Diagnostic Testing certification that has been made available by the HERS provider, and signed and dated by the HERS rater. Alternatively, the building department shall authorize the submittal of the signed registered Certificate(s) of Acceptance and signed registered Certificate(s) of Field Verification and Diagnostic Testing for retention to a HERS provider's data registry in which case the building department shall not close a building permit until the building department has confirmed that the enforcement agency's authorized submittal to the HERS provider data registry of the documents has been completed. These filings may be paper or electronic documents. The HERS provider shall make document verification services available, via phone or internet communications interface, to building departments, builders and contractors, HERS raters, the Energy Commission, and other

authorized users of the provider data registry. The HERS provider shall insure that the Certificate of Compliance, and Certificate of Acceptance certification information and approval signatures are retained per Title 20 Section 1673(d).

NA1.4 Installation Requirements – Certificate of Acceptance

Certificates of Acceptance and Installer certifications are required for each and every building and for every single zone package space conditioning equipment unit in the building that requires duct sealing with HERS rater field verification and diagnostic testing. When compliance requires duct sealing, builder employees or subcontractors shall perform diagnostic testing according to the procedures specified in Appendix NA2, and verify that the work meets the requirements for compliance credit as shown on the registered Certificate of Compliance. The owner/installer shall make arrangements for transmittal of the Installation Certificate information to a HERS provider data registry, access the registered Certificate of Acceptance Installation Certificate from the Provider's data registry, and certify on a copy of the registered Acceptance Certificate that the installation work meets the requirements for compliance credit.

A signed copy of the installer's portion of the registered Certificate of Acceptance shall be posted at the job site for review by the building inspector, and a copy shall be provided to the HERS rater. Additionally, a signed registered copy of the Certificate of Acceptance shall be submitted to the building department, for filing with the plans, in conjunction with requests for final inspections to close the building permit. Alternatively, the building department shall authorize the submittal of a signed copyof the registered Certificate of Acceptance to a HERS provider's data registry. These filings may be paper or electronic documents.

NA1.5 HERS Procedures –– Verification, Testing, and Sampling

At the builder's option, HERS field verification and diagnostic testing shall be completed either for each single zone package space conditioning equipment unit in the building or for a sample from a designated group of the units that are installed in the building. Field verification and diagnostic testing for compliance credit for duct sealing shall use the diagnostic duct leakage from fan pressurization of ducts in Appendix NA2.

The builder or subcontractor shall provide to the HERS rater a copy of the registered Certificate of Compliance approved/signed by the principal designer/owner and a registered copy of the Certificate of Acceptance containing the installer certifications required in Section NA1.4~~3~~. Prior to completing field verification and diagnostic testing, the HERS rater shall confirm that transmittal to the HERS provider's data registry of the Certificate of Compliance information, and the Installation Certificate information has been completed, for each unit having features requiring HERS verification. The HERS rater shall also confirm that the registered installation certifications have been completed as required, and that the installer's diagnostic test results and the installation certification information shows compliance consistent with the Certificate of Compliance. The HERS provider shall insure that the content and approval signatures for the Certificate(s) of Compliance and Installation Certificate(s) are retained per Title 20 section 1673(d).

If field verification and diagnostic testing determines that the requirements for compliance are met, the HERS rater shall transmit the test results to the HERS provider's data registry, whereupon the provider shall make available a registered copy of the HERS verification portion of the Certificate of Acceptance to the HERS rater, the builder, and the building department. Printed copies, electronic or scanned copies, and photocopies of the provider's registered HERS verification portion of the Certificate of Acceptance are allowed, subject to verification that the information contained on the copy conforms to the current unique certifying information on file in the provider's data registry for the dwelling.

The HERS rater shall provide a "wet" signature on registered copies of the HERS verification portion of the Certificate of Acceptance. The HERS verification portion of the Certificate of Acceptance shall be submitted to the building department. At the discretion of the jurisdiction, provisions shall be made to accommodate submittal of the registered HERS verification portion of the Certificate of Acceptance in an electronic file format that can be verified as "electronically" signed by the HERS rater, thus entirely sufficient for purposes of documenting the HERS rater's approval and compliance with field verification and diagnostic testing requirements without a "wet" signature.

The HERS provider shall make available via phone or internet communications interface a way for building officials, builders, and HERS raters to verify that the information displayed on copies of the submitted HERS verification portion of the Certificate of Acceptance conforms to the unique identifying information stored in the provider's data registry for the registered HERS verification portion of the Certificate of Acceptance.

If the builder chooses the sampling option, the procedures described in Sections NA1.5~~4~~.2, NA1.5~~4~~.3, and NA1.6~~5~~ shall be followed.

NA1.5.1 HERS Procedures - Initial Field Verification and Diagnostic Testing

The HERS rater shall diagnostically test and field verify the first single zone package space conditioning equipment unit of each building. This initial testing allows the builder to identify and correct any potential duct installation and sealing flaws or practices before other units are installed. If field verification and diagnostic testing determines that the requirements for compliance are met, the HERS rater shall transmit the test results to the HERS provider registry, whereupon the provider shall make available a registered copy of the Certificate of Acceptance to the HERS rater, the builder, and the building department.

NA1.5.2 HERS Procedures -– Group Sample Field Verification and Diagnostic Testing

After the initial field verification and diagnostic testing is completed, the builder or the HERS rater shall identify a group of up to seven individual single zone package space conditioning equipment units in the building from which a sample will be selected and identify the names and license numbers of the subcontractors responsible for the installations requiring field verification and diagnostic testing. The HERS rater shall verify that transmittal to the HERS provider's data registry - for all dwelling units contained in the group - of the Certificate of Compliance information and the Installation Certificate information has been completed for each unit having features requiring HERS verification. The group shall be closed prior to selection of the sample that will be field verified and diagnostically tested. The HERS rater shall also confirm that the registered installation certifications have been completed as required, and that the installer's diagnostic test results and the installation certification information shows compliance consistent with the registered Certificate of Compliance The group shall be closed prior to selection of the sample that will be field verified and diagnostically tested.

The builder or the HERS Rater may request removal of units from the group by notifying the HERS provider prior to selection of the sample that will be tested and shall provide justification for the change. Removed units shall either be field verified and diagnostically tested individually or shall be included in a subsequent group for sampling.

The HERS rater, with no direction from the installer or builder, shall randomly select one unit out of the closed group for field verification and diagnostic testing. The HERS rater shall enter the test and/or field verification results into the HERS provider's data registry regardless of whether the results indicate a pass or fail. If the test fails then the failure must be entered into the provider's data registry even if the installer immediately corrects the problem. In addition, the procedures in section NA1.5.3 shall be followed.

If field verification and diagnostic testing determines that the requirements for compliance are met, the HERS rater shall enter the test results into the HERS provider's data registry. Whereupon, the provider shall make available to the HERS rater, the builder, and the building department, a registered copy of the HERS verification portion of the Certificate of Acceptance. The HERS verification portion of the Certificate of Acceptance shall report the successful diagnostic testing results and conclusions regarding compliance for the tested unit. The HERS verification portion of the Certificate of Acceptance shall also provide:

- Building permit number for the unit
- Registration Number – a HERS provider-designated identification number unique to the unit
- Group Number – a HERS provider-designated identification number unique to the sample group
- Time and date stamp of the provider's issuance of the registered HERS verification portion of the Certificate of Acceptance
- Provider's logo or official seal

The HERS provider shall also make available a registered copy of the Certificate of Acceptance to the builder, the HERS provider, and the building department for up to six additional units in the group. The registered Certificate of Acceptance shall not be provided for units that have not yet been installed and sealed. Each registered copy of the Certificate of Acceptance issued for the group shall disclose the unique certification numbers and the building permit numbers for all of the units contained in the group and shall indicate which unit was actually tested.

Whenever the builder changes subcontractors who are responsible for installing the space conditioning equipment units, the builder shall notify the HERS rater of any subcontractors who have changed, and terminate sampling for the associated group. All units requiring HERS rater field verification and diagnostic testing for compliance that were installed by previous subcontractors or were subject to field verification and diagnostic testing under the supervision of a previous HERS provider, for which the builder does not have a completed Certificate of Acceptance, shall either be individually tested or included in a separate group for sampling. Individual single zone package space conditioning equipment units that are subject to the requirements of Section 144(k) with installations completed by new subcontractors shall either be individually tested or shall be included in a new sampling group following a new *Initial Field Verification and Testing*, per Section NA1.5.1.

The HERS rater shall not notify the builder when sample testing will occur prior to the completion of the work that is to be tested, or prior to entry of the data from the installer's portion of the Certificate of Acceptance into the provider's data registry. After the HERS rater selects the sample unit to test, and notifies the builder when testing will occur, the builder shall not do additional work on the features being tested.

The HERS provider shall close the group within 6 months after the signature date shown on any Certificate of Acceptance installer certification documentation in the group. The HERS provider shall notify the HERS rater that the group has been closed, and a sample must be selected for field verification and diagnostic testing. Thus if a group is required to close due to the 6 month limit, field verification and diagnostic testing shall be conducted on a minimum of one unit randomly selected from the units assigned to the group regardless of how many units are assigned to the group.

NA1.5.3 HERS Procedures - Re-sampling, Full Testing and Corrective Action

When a failure is encountered during sample testing, the failure must be entered into the provider's data registry. Corrective action shall be taken and the unit shall be retested to verify that corrective action was successful. Corrective action and retesting on the unit shall be repeated until the testing indicates compliance and the results have been entered into the HERS provider's data registry. In addition, the HERS rater shall conduct secondary sampling to assess whether the first failure in the group is unique or if the rest of the units in the group are likely to have similar failings. The HERS rater shall randomly select for re-sampling one of the remaining untested units in the group for testing of the feature that failed.

If testing in the secondary sample confirms that the requirements for compliance credit are met, then the unit with the failure shall not be considered an indication of failure in the other units in the group. The HERS rater shall transmit the re-sample test results to the HERS provider registry, whereupon the provider shall make available to the HERS rater, the builder, and the building department a registered copy of the HERS verification portion of the Certificate of Acceptance for the remaining units in the group including the dwelling unit in the re-sample.

If field verification and diagnostic testing in the re-sample results in a second failure, the HERS rater shall report the second failure to the HERS provider, the builder, and the building department. The builder shall take corrective action in all space conditioning units in the group that have not been tested. In cases where corrective action would require destruction of building components, the builder may choose to reanalyze compliance and choose different measures that will achieve compliance. In this case a new Certificate of Compliance shall be completed and submitted to the HERS provider, the HERS rater and building department. The HERS rater shall conduct field verification and diagnostic testing for each of these space conditioning units to verify that problems have been corrected and that the requirements for compliance have been met. Upon verification of compliance, the HERS rater shall enter the test results into the HERS provider's data registry.

Whereupon the provider shall make available to the HERS rater, the builder, and the building department, a registered copy of the HERS verification portion of the Certificate of Acceptance for each individual unit in the group.

The HERS provider shall file a report with the building department explaining all action taken (including field verification, diagnostic testing, and corrective action,) to bring into compliance units for which full testing has been required. If corrective action requires work not specifically exempted by Section 112 of the CMC or Section 106 of the CBC, the builder shall obtain a permit from the building department prior to commencement of any of the work.

Corrections to avoid reporting a failure to the HERS provider data registry shall not be made to a sampled or re-sampled unit after the HERS rater selects the sample unit, or during the course of HERS testing of the unit. If it becomes evident that such corrections have been made to a sampled or re-sampled unit to avoid reporting a failure, field verification and diagnostic testing shall be required to be performed on 100% of the individual single zone package space conditioning equipment units in the group.

NA1.6 Third Party Quality Control Programs

The Commission may approve third-party quality control programs that serve some of the function of HERS raters for diagnostic testing and field verification purposes but do not have the authority to sign compliance documentation as a HERS rater. The third-party quality control program shall provide training to installers regarding compliance requirements for duct sealing. The third-party quality control program shall collect data from participating installers for each installation completed for compliance credit, provide data checking analysis to evaluate the validity and accuracy of the data to independently determine whether compliance has been achieved, provide direction to the installer to retest and correct problems when data checking determines that compliance has not been achieved, require resubmission of data when retesting and correction is directed, and maintain a database of all data submitted by installers in a format that is acceptable to the Commission and available to the Commission upon request. The data that is collected by the third-party quality control program shall be more detailed than the data required for showing compliance with the Standards, shall provide an independent check on the validity and accuracy of the installer's claim that compliance has been achieved and shall not be alterable by the installer to indicate that compliance has been achieved when in fact compliance has not been achieved.

The HERS Provider shall arrange for the services of a HERS rater to conduct independent field verifications of the installation work performed by the participating installing contractor and Third Party Quality Control Program, completing all of the responsibilities of a HERS rater as specified in this chapter with the exception that sampling shall be completed for a group of up to thirty space conditioning units with a minimum sample of one out of every 30 sequentially completed units from the group. The HERS rater shall be an independent entity from the third-party quality control program. Re-sampling, full testing and corrective action shall be completed as specified in Section NA1.5.3 with the exception that the group size can be up to 30 units. The third party quality control program shall not impose restrictions on the HERS rater or the HERS provider that limit their independence, or the ability of the HERS rater or the HERS provider to properly perform their functions. For example, the third party quality control program shall not impose restrictions on a HERS rater's use of equipment beyond that required by the Energy Commission.

The third-party quality control program shall meet all of the requirements imposed on of a HERS rater specified in the Commission's HERS Program regulations (California Code of Regulations, Title 20, Division 2, Chapter 4, Article 8, Sections 1670 -1675), including the requirement that they be an independent entity from the builder the HERS rater for the units, and the subcontractor installer as specified by Section 1673(i). However, a third-party quality control program may have business relationships with installers participating in the program to advocate or promote the program and an installer's participation in the program and to advocate or promote products that the third-party quality control program sells to installers as part of the program.

Prior to approval by the Commission, the third party quality control program shall provide a detailed explanation to the Commission of 1) the data that is to be collected from the installers, 2) the data checking process that will be used to evaluate the validity and accuracy of the data, 3) the justification for why this data checking process will provide strong assurance that the installation actually complies, and 4) the format for the

database that will be maintained and provided to the Commission upon request. The third-party quality control program may apply for a confidential designation of this information as specified in the Commission's Administrative Regulations (California Code of Regulations, Title 20, Division 2, Chapter 7, Article 2, Section 2505). The third-party quality control program shall also provide a detailed explanation of the training that will be provided to installers and the procedures that it will follow to complete independent field verifications.

The third party quality control program licensed/certified installing contractor and the installing contractor's responsible installing technicians shall be required to be trained in quality installation procedures, the requirements of this Appendix NA1, and any other applicable specialized third party quality control program-specific procedures as a condition for participation in the program. The training requirements also apply to the installing contractor's specialty subcontractors who provide Third Party Quality Control Program services. All installation verification and diagnostic work performed in the program shall be subject to the same quality assurance procedures as required by the Energy Commission's HERS program regulations.

The third-party quality control program shall be considered for approval as part of the rating system of a HERS provider, which is certified as specified in the Commission's HERS Program regulations, Title 20,Division 2, Chapter 4, Article 8, Section 1674. A third-party quality control program can be added to the rating system through the re-certification of a certified HERS provider as specified by Title 20, Division 2, Chapter 4, Article 8, Section 1674(d).

NA1.7 Installer Requirements and HERS Procedures for Alterations

This section on alterations is intended to describe the differences that apply to alterations. Otherwise the procedures and requirements detailed in previous sections shall also apply to procedures and requirements for alterations. For alterations, building owners or their agents may carry out the actions that are assigned to builders in previous sections of this document.

When compliance for an alteration requires field verification and diagnostic testing, the building permit applicant may choose for the testing and field verification to be completed for the permitted space alone, or alternatively as part of a designated sample group of space conditioning units for which the same installing company has completed work that requires diagnostic testing and field verification for compliance. The building permit applicant shall make arrangements for transmittal of Certificate of Compliance information to the provider data registry identifying the building features and measures requiring HERS verification. The building permit applicant shall also submit a copy of the registered approved/signed Certificate of Compliance to the HERS rater.

The installer shall perform diagnostic testing and the procedures specified in Section NA1.5. When the installation is complete, the person responsible for the performance of the installation shall make arrangements for transmittal of the Installation Certificate information to the HERS provider data registry. After submittal of the Installation Certificate information, the person responsible for the performance of the installation shall access the registered Installation Certificate from the provider's data registry, sign the registered Installation Certificate, post a copy at the building site for review by the building inspector, and submit a copy to the building department for filing with the building plans. Alternatively, the enforcement agency shall authorize the submittal of the signed Installation Certificate(s) for retention to a HERS provider's data registry. These filings may be paper or electronic documents. The owner or subcontractor shall also provide a signed copy of the registered Installation Certificate to the HERS rater. The copy submitted to the rater may be in paper or electronic format.

The HERS rater shall verify that transmittal to the HERS provider's data registry of the Certificate of Compliance information and the Installation Certificate information has been completed for each unit having features requiring HERS verification. The HERS rater shall also confirm that the registered installation certifications have been completed as required, and that the installer's diagnostic test results and the installation certification information shows compliance consistent with the registered Certificate of Compliance for the unit.

If group sampling is utilized for compliance, the HERS rater shall define a group of up to seven units for sampling purposes, requiring that all units within the group have been serviced by the same installing

company. The installing company may request a group for sampling that is smaller than seven dwelling units. Whenever the HERS rater for an installing company is changed, a new group shall be established.

Re-sampling, full testing and corrective action shall be completed if necessary as specified in Section NA1.5.3. 7.5.3. For alterations, the installing company shall offer to complete field verification and diagnostic testing and any necessary corrective action at no charge to building owners in the group.

Third Party Quality Control Programs, as specified in Section NA1.6, may also be used with alterations.

The building department shall not approve a building with individual single zone package space conditioning equipment for occupancy until the building department has received, for filing with the building plans, a registered copy of the Certificate of Acceptance installation certification that has been signed by the builder/owner or subcontractor, and a registered copy of the HERS verification portion of the Certificate of Acceptance that has been signed by the HERS rater. Alternatively, the building department shall authorize the submittal of a signed, registered copy of the installation certification portion of the Certificate of Acceptance, and a signed, registered copy of the HERS verification portion of the Certificate of Acceptance for retention to a HERS provider's data registry, in which case the building department shall not close a building permit until the building department has confirmed that the enforcement agency's authorized submittal to the HERS provider data registry of the documents has been completed. These filings may be paper or electronic documents. The HERS provider shall make document verification services available, via phone or internet communications interface, to building departments, builders and contractors, HERS raters, the Energy Commission, and other authorized users of the provider data registry. The HERS provider shall insure that the Certificate of Compliance, and Certificate of Acceptance certification information and approval signatures are retained per Title 20 Section 1673(d).

The building official may approve compliance based on the registered installation certification portion of the Certificate of Acceptance where data checking has indicated that the unit complies, on the condition that if sampling indicates that re-sampling, full testing and corrective action is necessary, such work shall be completed.

Nonresidential Appendix NA2 – 2008

Appendix NA2 – Nonresidential Field Verification and Diagnostic Test Procedures

NA2.1 Air Distribution Diagnostic Measurement and Field Verification

Diagnostic inputs are used for the calculation of improved duct efficiency. The diagnostics include observation of various duct characteristics and measurement of duct leakage and system fan flows as described in Sections NA2.3.3 through NA2.3.8. These observations and measurements replace those assumed as default values.

The diagnostic procedures include:

- Measurement of duct surface area if ducts are located outdoors or in multiple spaces as described in Section NA2.3.3.
- Observation of the insulation level for the supply (R_s) and return (R_r) ducts outside the conditioned space as described in Section NA2.3.5.
- Observation of the presence of a cool roof.
- Observation of the presence of an outdoor air economizer.
- Measurement of total duct system leakage as described in Section NA2.3.8.

Using default values instead of measured values will produce conservative (low) estimates of duct efficiency.

~~Instrumentation Specifications~~

~~The instrumentation for the air distribution diagnostic measurements shall conform to the following specifications:~~

~~*NA1.2.1.1 Pressure Measurements*~~

~~All pressure measurements shall be measured with measurement systems (i.e. sensor plus data acquisition system) having an accuracy of ± 0.2 Pa. All pressure measurements within the duct system shall be made with static pressure probes.~~

~~*NA1.2.1.2 Duct Leakage Measurements*~~

~~The measurement of air flows during duct leakage testing shall have an accuracy of ±3% of measured flow using digital gauges.~~

~~All instrumentation used for duct leakage diagnostic measurements shall be calibrated according to the manufacturer's calibration procedure to conform to the above accuracy requirement. All testers performing diagnostic tests shall obtain evidence from the manufacturer that the equipment meets the accuracy specifications. The evidence shall include equipment model, serial number, the name and signature of the person of the test laboratory verifying the accuracy, and the instrument accuracy. All diagnostic testing equipment is subject to re-calibration when the period of the manufacturer's guaranteed accuracy expires.~~

~~Apparatus~~

~~*NA5.4.2.1 Duct Pressurization*~~

~~The apparatus for fan pressurization duct leakage measurements shall consist of a duct pressurization and flow measurement device meeting the specifications in Section NA5.4.1.2.~~

~~Case~~	~~User and Application~~	~~Leakage criteria, % of total fan flow~~	~~Procedure~~
~~Sealed and tested new duct systems~~	~~Installer Testing~~ ~~HERS Rater Testing~~	~~6%~~	~~NA5-4.3.8.2.1~~
~~Sealed and tested altered existing duct systems~~	~~Installer Testing~~ ~~HERS Rater Testing~~	~~15% Total Duct Leakage~~	~~NA5-4.3.8.2.1~~
	~~Installer Testing and Inspection~~ ~~HERS Rater Testing and Verification~~	~~60% Reduction in Leakage and Visual Inspection~~	~~NA5-4.3.8.2.2~~ ~~RA4-4.3.6 and RA4-4.3.7~~
	~~Installer Testing and Inspection~~ ~~HERS Rater Testing and Verification~~	~~Fails Leakage Test but All Accessible Ducts are Sealed~~ ~~And Visual Inspection~~	~~NA5-4.3.8.2.3~~ ~~RA4-4.3.6 and RA4-4.3.7~~

~~NA5.4.3.8.2.1 Total Duct Leakage Test from Fan Pressurization of Ducts~~

~~The objective of this procedure is for an installer to determine or a rater to verify the total leakage of a new or altered duct system. The total duct leakage shall be determined by pressurizing both the supply and return ducts to 25 Pascals with all ceiling diffusers/grilles and HVAC equipment installed. When existing ducts are to be altered, this test shall be performed prior to and after duct sealing. The following procedure shall be used for the fan pressurization tests:~~

~~1. Verify that the air handler, supply and return plenums and all the connectors, transition pieces, duct boots and registers are installed. The entire system shall be included in the test.~~

~~2. For newly installed or altered ducts, verify that cloth backed rubber adhesive duct tape has not been used.~~

~~3 Seal all the supply and return registers, except for one return register or the system fan access. Verify that all outside air dampers and /or economizers are sealed prior to pressurizing the system.~~

~~4. Attach the fan flowmeter device to the duct system at the unsealed register or access door.~~

~~5. Install a static pressure probe at a supply.~~

~~6. Adjust the fan flowmeter to produce a 25 Pascal (0.1 in water) pressure difference between the supply duct and the outside or the building space with the entry door open to the outside.~~

~~7. Record the flow through the flowmeter ($Q_{total,25}$) - this is the total duct leakage flow at 25 Pascals.~~

~~8. Divide the leakage flow by the total fan flow and convert to a percentage. If the leakage flow percentage is less than 6% for new duct systems or less than 15% for altered duct systems, the system passes.~~

~~Duct systems that have passed this total leakage test will be sampled by a HERS rater to show compliance.~~

~~NA5.4.3.8.2.2 Leakage Improvement from Fan Pressurization of Ducts~~

~~For altered existing duct systems which have a higher lekage percentage than the Total Duct leakage criteria in Section NA5.4.3.8.2.1, the objective of this test is to show that the original leakage is reduced through duct sealing as specified in Table NA5-3. The following procedure shall be used:.~~

~~1. Use the procedure in NA5.4.3.8.2.1 to measure the leakage before commencing duct sealing.~~

~~2. After sealing is complete use the same procedure to measure the leakage after duct sealing.~~

~~3. Subtract the sealed leakage from the original leakage and divide the remainder by the original leakage. If the leakage reduction is 60% or greater of the original leakage, the system passes.~~

~~Complete the Visual Inspection specified in NA5.4.3.8.2.4.~~

~~Duct systems that have passed this leakage reduction test and the visual inspection test will be sampled by a HERS rater to show compliance.~~

~~NA5..4.3.8.2.3 Sealing of All Accessible Leaks~~

~~For altered existing duct systems that do not pass the Total Leakage test (NA5.4.3.8.2.1), the objective of this test is to show that all accessible leaks are sealed and that excessively damaged ducts have been replaced. The following procedure shall be used:~~

~~1. Complete each of the leakage tests~~

~~2. Complete the Visual Inspection as specified in NA5.4.3.8.2.4.~~

~~All duct systems that could not pass either the total leakage test or the leakage improvement test will be tested by a HERS rater to show compliance. This is a sampling rate of 100%.~~

~~NA5.4.3.8.2.4 Visual Inspection of Accessible Duct Sealing~~

~~For altered existing duct systems that fail to be sealed to 15% of total fan flow, the objective of this inspection is to confirm that all accessible leaks have been sealed and that excessively damaged ducts have been replaced. The following procedure shall be used:~~

~~1. Visually inspect to verify that the following locations have been sealed:~~

~~Connections to plenums and other connections to the forced air unit~~

~~Refrigerant line and other penetrations into the forced air unit~~

~~Air handler door panel (do not use permanent sealing material, metal tape is acceptable)~~

~~Register boots sealed to surrounding material~~

~~Connections between lengths of duct, as well as connections to takeoffs, wyes, tees, and splitter boxes.~~

~~2. Visually inspect to verify that portions of the duct system that are excessively damaged have been replaced. Ducts that are considered to be excessively damaged are:~~

~~Flex ducts with the vapor barrier split or cracked with a total linear split or crack length greater than 12 inches~~

~~Crushed ducts where cross-sectional area is reduced by 30% or more~~

~~Metal ducts with rust or corrosion resulting in leaks greater than 2 inches in any dimension~~

~~Ducts that have been subject to animal infestation resulting in leaks greater than 2 inches in any dimension~~

~~NA5.4.3.8.4 Labeling requirements for tested systems~~

~~California Home Energy Rating Systems~~

~~Compliance credit for duct sealing for HVAC systems covered by sections 144(k), 149(b)1.D and 149(b)1.E of the Standards requires field verification and diagnostic testing of as-constructed duct systems by a certified HERS rater, using the testing procedures in Appendix NGNonresidential ACM Appendix ND. The Commission approves HERS providers, subject to the Commission's HERS Program regulations, which appear in the California Code of Regulations, Title 20, Chapter 4, Article 8, Sections 1670-1676). Approved HERS providers are authorized to certify HERS raters and maintain quality control over field verification and diagnostic testing. When User's Manual and Help System indicates field verification and diagnostic testing of specific energy efficiency improvements as a condition for those improvements to qualify for Title 24 compliance credit, an approved HERS provider and certified HERS rater shall be used to conduct the field verification and diagnostic testing. HERS providers and raters shall be considered special inspectors by building departments, and shall demonstrate competence, to the satisfaction of the building official, for the field verifications and diagnostic~~

~~testing. The HERS provider and HERS rater shall be independent entities from the builder or subcontractor installer of the energy efficiency improvements being tested and verified, and shall have no financial interest in the installation of the improvements. Third-party quality control programs approved by the Commission may serve some of the functions of HERS raters for field verification and diagnostic testing purposes as specified in Section NA1-6.~~

~~The remainder of this chapter describes the:~~

~~Required documentation and communication steps;~~

~~Requirements for installation certification by the installer;~~

~~Requirements for HERS rater field verification and diagnostic testing procedures;~~

~~Requirements for sampling procedures;~~

~~Requirements for Third Party Quality Control Programs;~~

~~Requirements for HERS compliance for alterations;~~

~~Responsibilities assigned to each of the parties involved in the field verification and diagnostic testing process;~~

~~Summary of Documentation and Communication~~

~~The documentation and communication process for duct sealing field verification and diagnostic testing is summarized below. The subsequent sections of this chapter contain additional information and requirements that apply to all situations; however the section on alterations, NA1-7, applies specifically to the differences in the requirements for alterations. Section NA1-6 applies specifically to the differences in the requirements for Third Party Quality Control Programs.~~

~~The documentation author and the principal mechanical designer shall complete the compliance documents, including the MECH-1MECH-1-C for the building.~~

~~The documentation author or the principal mechanical designer shall provide a signed Certificate of Compliance (MECH-1MECH-1-C) to the builder, which indicates that duct sealing with HERS rater diagnostic testing and field verification is required for compliance. The MECH-1-C shall be verified and approved/signed by the principal designer/owner prior to submittal to the building department.~~

~~The builder or principal mechanical designer shall make arrangements for transmittal of the MECH-1-C information, for features requiring HERS verification, to the data registry of a HERS provider. The HERS provider shall insure that the MECH-1-C content and approval signatures are retained per Title 20 section 1673(d). The builder shall also arrange for the services of a certified HERS rater prior to installation of the duct system, so that once the installation is complete the HERS rater has ample time to complete the field verification and diagnostic testing without delaying final approval of occupancy by the building department. The builder or principal mechanical designer shall provide to the HERS Rater a copy of the MECH-1-C that was approved/signed by the principal designer/owner and submitted to the building department.~~

~~The builder or subcontractor shall installs the duct system(s) which require field verification and diagnostic testing, as specified by Section NA1-1.. The builder or builder's installer subcontractor shall complete diagnostic testing and the procedures specified in Section NA1-5. When the installation is complete, the builder or the builder's subcontractor responsible for the performance of the installation shall complete and sign the installer's portion of the MECH-5MECH-5-A, Mechanical Air Distribution SummaryAcceptance Document, and keep it post a copy at the building site for review by the building inspector, and submit a copy to the building department. The builder or subcontractor shall also shall provide a copy of the completed installer's portion of the MECH-5MECH-5-A to the HERS rater.~~

~~The HERS rater shall manually enter or make arrangements for transmittal of the MECH-5-A installation certification information, to the HERS provider's data registry. The HERS provider shall insure that the MECH-5-A installation certification information and approval signatures are retained per Title 20 section 1673(d). The HERS rater shall complete the field verification and diagnostic testing as specified in Section NA1-5,. The HERS rater shall enter the test results into the HERS provider's data registry.~~

~~The HERS provider shall make available a certified copy of the HERS verificationcompletes the HERS rater's portion of the MECH-5MECH-5-A, and provides a signed MECH-5 to the HERS providerrater, builder and building department.~~

~~The building department shall not approve a building with individual single zone package space conditioning equipment unit for occupancy until the building department has received a MECH-5MECH-5-A installation certification that has been signed by the builder/owner or subcontractor, and a certified copy of the HERS verification portion of the MECH-5-A that has been signed by the HERS rater.~~

~~4 Installation or Requirements - Installation Certification Form MECH-5-A~~

~~When compliance includes duct sealing, builder employees or subcontractors shall complete diagnostic testing, and certify on the installer's portion of the (MECH-5MECH-5-A) the diagnostic test results are correct, and that the work meets the requirements for compliance credit as shown on the MECH-1-C. A signed copy of the installers portion of the Mech-5-A shall be posted at the lob site for review by the building inspector, and a copy shall be provided to the HERS rater. Additionally, a signed copy of the Installer's portion of the Mech-5-A shall be submitted to the building department in conjunction with requests for final inspections to close the building permit.~~

~~Installer certifications are required for each and every building, and for every single zone package space conditioning equipment unit in the building that requires duct sealing with HERS rater field verification and diagnostic testing, if more than one such space conditioning equipment unit is installed in the building.~~

~~5 HERS Procedures - Field Verification and Diagnostic Testing Procedures~~

~~At the builder's option, HERS field verification and diagnostic testing shall be completed either for each single zone package space conditioning equipment unit in the building or for a sample of all of the units that are installed in the building. Field verification and diagnostic testing for compliance credit for duct sealing shall use the diagnostic duct leakage from fan pressurization of ducts in ACM Appendix NG.~~

~~The builder shall provideto the HERS provider rater a copy of theMECH-1-C approved/signed by the principal designer/owner and a copy of the MECH-5MECH-5-A containing the installer certifications required in Section NA1-4. Prior to completing field verification and diagnostic testing, the HERS rater shall first verify that the installation certifications have been completed as required, and that the installer's diagnostic test results and the installation certification information shows compliance consistent with the MECH-1-C.~~

~~If field verification and diagnostic testing determines that the requirements for compliance are met, the HERS rater shall transmit the test results to the HERS provider's data registry, whereupon the provider shall make available a certified copy of the HERS verification portion of the MECH-5-A *Certificate of Field Verification and Diagnostic Testing,* to the HERS rater, the builder, and the building department. Printed copies, electronic or scanned copies, and photocopies of the provider's certified HERS verification portion of the MECH-5-A are allowed, subject to verification that the information contained on the copy conforms to the current unique certifying information on file in the provider's data registry for the dwelling.~~

~~The HERS rater shall provide a "wet" signature on certified copies of the HERS verification portion of the MECH-5-A. The HERS verification portion of the MECH-5-A shall be submitted to the building department. At the discretion of the jurisdiction, provisions shall be made to accommodate submittal of the certified HERS verification portion of the MECH-5-A in an electronic file format that can be verified as "electronically" signed by the HERS rater, thus entirely sufficient for purposes of documenting the HERS rater's approval and compliance with field verification and diagnostic testing requirements without a "wet" signature.~~

~~The HERS provider shall make available via phone or internet communications interface a way for building officials, builders, and HERS raters to verify that the information displayed on copies of submitted HERS verification portion of the MECH-5-A conforms to the unique identifying information stored in the provider's data registry for the certified HERS verification portion of the MECH-5-A. See Section NA1-5.2 for required information for the HERS verification portion of the MECH-5-A.~~

~~If the builder chooses the sampling option, the procedures described in this sSections NA1-5, NA1-5.1, NA1-5.2, NA1-5.3 shall be followed. Sampling procedures described in theseis sections shall be included in the Nonresidential *Compliance SupplementManual.*~~

~~5.1 HERS Proceedures - Initial Field Verification and Diagnostic Testing~~

~~The HERS rater shall diagnostically test and field verify the first individual single zone package space conditioning equipment unit of each building. This initial testing allows the builder to identify and correct any potential duct installation and sealing flaws or practices before other units are installed. If field verification and diagnostic testing determines that the requirements for compliance are met, the HERS rater shall transmit the test results to the HERS provider registry, whereupon the provider shall make available a certified copy of the CF-4R, *Certificate of Field Verification and Diagnostic Testing,* to the HERS rater, the builder, and the building department.~~

~~5.2 HERS Proceedures – Group Sample Field Verification and Diagnostic Testing~~

~~After the initial field verification and diagnostic testing is completed, the builder or the HERS rater shall identify a group of up to seven individual single zone package space conditioning equipment units in the building from which a sample will be selected, and Identify the names and license numbers of the subcontractors responsible for the installations requiring field verification and diagnostic testing for testing, and notify the HERS provider. The HERS rater shall manually enter or make arrangements for the transmittal of the Installer's portion of the MECH-5-A information for features requiring HERS verification into the provider's data registry for all dwelling units contained in the group, and the group shall be closed prior to selection of the sample that will be field verified and diagnostically tested.~~

~~The builder or the HERS Rater may request removale of units from the group by notifying the HERS provider prior to selection of the sample that will be tested and shall provide justification for the change. Removed units which are installed shall either be field verified and diagnostically tested individually or shall be included in a subsequent group for sampling.~~

~~The HERS rater with no direction from the installer or builder shall randomly select a minimum of one unit out of from the closed group for field verification and diagnostic testing and field verification. When several units are ready for testing at the same time, the HERS rater shall randomly select the unit to be tested. The HERS rater shall diagnostically test and field verify the selected unitselected by the HERS rater. The HERS rater shall enter the test and/or field verification results into the HERS provider's data registry regardless of whether the results indicate a pass or fail. If the test fails then the failure must be entered into the providers data registry even if the installer immediately corrects the problem. In addition the procedures in section NA1-5.3 shall be followed.~~

~~If field verification and diagnostic testing determines that the requirements for compliance are met, the HERS rater shall provide a signed and dated MECH-5 to the builder, the HERS provider, and the building departmententer the test results into the HERS provider's data registry. Whereupon the provider shall make available to the HERS rater, the builder, and the building department, a certified copy of the HERS verification portion of the MECH-5-A. The MECH-5 HERS verification portion of the MECH-5-A shall report the successful diagnostic testing results and conclusions regarding compliance for the tested unit. The HERS verification portion of the MECH-5-A shall also provide:~~

~~Building permit number for the unit~~

~~Certification Number – a HERS provider-designated identification number unique to the unit~~

~~Group Number – a HERS provider-designated identification number unique to the sample group~~

~~Time and date stamp of the provider's issuance of the certified HERS verification portion of the MECH-5-A~~

~~Provider's logo or official seal~~

~~The HERS rater provider shall also provide make available to the HERS rater, the builder, and the building department a MECH-5 certified copy of the form MECH-5-A to the builder, the HERS provider, and the building department for up to six additional all other units in the group. The MECH-5 shall not be provided for units that have not yet been installed and sealed. Each certified copy of the HERS verification portion of MECH-5-A issued for the group shall disclose the unique Certification Numbers and the building permit numbers for all of the units contained in the group and shall indicate which unit was actually tested.~~

~~Whenever the builder changes subcontractors who are responsible for installation of the space conditioning equipment units, the builder shall notify the HERS rater of any subcontractors who have changed, and terminate sampling for the identified group. All units requiring HERS rater field verification and diagnostic~~

~~testing for compliance that were installed by previous subcontractors or were subject to field verification and diagnostic testing under the supervision of a previous HERS provider, for which the builder does not have a completed MECH-1MECH-1-C, shall either be individually tested or included in a separate group for sampling. Individual single zone package space conditioning equipment units that are subject to the requirements of Section 144(k) with installations completed by new subcontractors shall either be individually tested or shall be included in a new sampling group following a new *Initial Field Verification and Testing*.~~

~~The HERS rater shall not notify the builder when sample testing will occur prior to the completion of the work that is to be tested. After the HERS rater notifies the builder when testing will occur, the builder shall not do additional work on the features being tested.~~

~~The HERS provider shall close the group within 6 months after the signature date shown on any MECH-5-A installer certification documentation in the group. The HERS provider shall notify the HERS rater that the group has been closed, and a sample must be selected for field verification and diagnostic testing. Thus if a group is required to close due to the 6-month limit, field verification and diagnostic testing shall be conducted on a minimum of one unit randomly selected from the units assigned to the group regardless of how many units are assigned to the group.~~

~~HERS Procedures - Re-sampling, Full Testing and Corrective Action~~

~~When a failure is encountered during sample testing, the failure must be entered into the provider's data registry. Corrective action shall be taken and the unit shall be retested to verify that corrective action was successful. Corrective action and retesting on the unit shall be repeated until the testing indicates compliance and the results have been entered into the HERS provider's data registry. In addition, the HERS rater shall conduct re-sampling to assess whether theat first failure in the group is unique or if the rest of the units in the group are likely to have similar failings. The HERS rater shall randomly select for re-sampling one of the remaining up to six untested units in the group for retesting of the feature that failed.~~

~~If testing in the units in the re-sample confirms that the requirements for compliance credit are met, then the unit with the failure shall not be considered an indication of failure in the other units in the group. The HERS rater shall transmit the re-sample test results to the HERS provider registry. Whereupon the provider shall make available to the HERS rater, the builder, and the building department, a certified copy of the HERS verification portion of the MECH-5A for the remaining units in the group including the unit in the re-sample. provide a signed and dated MECH-5 to the builder, the HERS provider, and the building department for up to six additional units in the group, including the unit in the re-sample. The builder shall take corrective action for the unit with the failure, and then the HERS rater shall retest that unit to verify compliance and issue a signed and dated to the builder.~~

~~If field verification and testing in the re-sample results in a second failure, the HERS rater shall report the second failure to the HERS provider, the builder, and the building department. The builder shall take corrective action in all space conditioning units in the group that have not been tested. In cases where corrective action would require destruction of building components, the builder may choose to reanalyze compliance and choose different measures that will achieve compliance. In this case a new Certificate of Compliance form MECH-1-C shall be completed and submitted to the HERS provider, the HERS rater and building department. The HERS rater shall conduct field verification and diagnostic testing for each of these space conditioning units to verify that problems have been corrected and that the requirements for compliance have been met. Upon verification of compliance, the HERS rater shall enter the test results into the HERS provider data registry. Whereupon the provider shall make available to the HERS rater, the builder, and the building department, a certified copy of the HERS verification portion of the MECH-5-A for each individual unit in the group. and shall report to the HERS provider, the builder, and the building department.~~

~~The HERS provider shall file a report with the building department explaining all action taken (including field verification, diagnostic testing, and corrective action) to bring into compliance units for which full testing has been required. If corrective action requires work not specifically exempted by Section 112 of the CMC or Section 106 of the CBC, the builder shall obtain a permit from the building department prior to commencement of any of the work.~~

~~If additional units in the group are completed during the time required to correct, field verify and test the previously installed units in the group, the rater shall individually field verify and diagnostically test those additional units to confirm that the requirements for compliance credit are met.~~

~~Corrections to avoid reporting a failure to the HERS provider data registry shall not be made to a sampled or re-sampled unit after the HERS rater selects the sample unit, or during the course of HERS testing of the unitavoid a failure. If it becomes evident that such corrections are made to a sampled or re-sampled unit to avoid reporting a failure, corrections, field verification and diagnostic testing shall be required to be performed on 100% of the individual single zone package space conditioning equipment units in the group.~~

~~Third Party Quality Control Programs~~

~~The Commission may approve third-party quality control programs that serve some of the function of HERS raters for diagnostic testing and field verification purposes, but do not have the authority to sign compliance documentation as a HERS rater. The third-party quality control program shall provide training to installers regarding compliance requirements for measures for which diagnostic testing and field verification is required. The third-party quality control program shall collect data from participating installers for each installation completed for compliance credit, complete provide data checking analysis to evaluate the validity and accuracy of the data to independently determine whether compliance has been achieved, provide direction to the installer to retest and correct problems when data checking determines that compliance has not been achieved, require resubmission of data when retesting and correction is directed, and maintain a database of all data submitted by installers in a format that is acceptable to the Commission and available to the Commission upon request. The data that is collected by the third-party quality control program shall be more detailed than the data required for showing compliance with the Standards, shall provide an independent check on the validity and accuracy of the installer's claim that compliance has been achieved, and shall not be alterable by the installer to indicate that compliance has been achieved when in fact compliance has not been achieved.~~

~~The third-party quality control programHERS provider shall also obtain arrange for the services of a HERS rater to conduct independent field verifications of the installation work performed by the participating installing contractor and Third Party Quality Control Program, completing all of the responsibilities of a HERS rater as specified in this chapter with the exception that sampling shall be completed for a group of up to thirty space conditioning units with a minimum sample of one out of every 30 sequentially completed units from the group. The HERS rater shall be an independent entity from the third-party quality control program. Re-sampling, full testing and corrective action shall be completed as specified in Section NA1-5.3 7.5.3 with the exception that re-sampling shall be completed for a minimum of one out of every 30 units from the group. The Third Party Quality Control Program shall not impose restrictions on the HERS rater or the HERS provider that limit their independence, or the ability of the HERS rater or the HERS provider to properly perform their functions. For example, the Third Party Quality Control Program shall not impose restrictions on the HERS rater's use of equipment beyond those required by the Energy Commission.~~

~~The third-party quality control program shall meet all of the requirements imposed on a HERS rater specified in the Commission's HERS Program regulations (California Code of Regulations, Title 20, Division 2, Chapter 4, Article 8, Sections 1670 -1675), including the requirement to be an independent entity from the builder, and the HERS rater that provides independent field verifications, and the subcontractor installer as specified by Section 1673(i). However, Aa third-party quality control program may have business relationships with installers participating in the program to advocate or promote the program and an installer's participation in the program, and to advocate or promote products that the third-party quality control program sells to installers as part of the program.~~

~~Prior to approval by the Commission, the Third Party Quality Control Program shall provide a detailed explanation to the Commission of 1) the data that is to be collected from the installers, 2) the data checking process that will be used to evaluate the validity and accuracy of the data, 3) the justification for why this data checking process will provide strong assurance that the installation actually complies, and 4) the format for the database that will be maintained and provided to the Commission upon request. The third-party quality control program may apply for a confidential designation of this information as specified in the Commission's Administrative Regulations (California Code of Regulations, Title 20, Division 2, Chapter 7, Article 2, Section 2505). The third-party quality control program shall also provide a detailed explanation of the training that will be provided to installers, and the procedures that it will follow to complete independent field verifications.~~

~~The Third Party Quality Control Program licensed/certified installing contractor and the installing contractor's responsible installing technicians shall be required to be trained in quality installation procedures; the requirements of this appendix NA1; and any other applicable specialized Third Party Quality Control Program-specific procedures as a condition to participation in the program. The training requirements also apply to the~~

~~installing contractor's specialty subcontractors who provide Third Party Quality Control Program services. All installation verification and diagnostic work performed in the program shall be subject to the same quality assurance procedures as required by the Energy Commission's HERS program regulations.~~

~~The third-party quality control program shall be considered for approval as part of the rating system of a HERS provider, which is certified as specified in the Commission's HERS Program regulations, Section 1674. A third-party quality control program can be added to the rating system through the re-certification of a certified HERS provider as specified by Section 1674(d).~~

~~Sampling Installer Requirements and HERS Procedures for Additions or Alterations~~

~~This section on alterations is intended to describe the differences that apply to alterations. Otherwise the procedures and requirements detailed in previous sections shall also apply to procedures and requirements for alterations. For alterations, building owners or their agents may carry out the actions that are assigned to builders in previous sections of this document (NA1).~~

~~When compliance for an addition or alteration requires field verification and diagnostic testing and field verification, the building permit applicant may choose for the testing and field verification to be completed for the permitted space alone individually, or alternatively as part of a designated sample group of space conditioning units for which the same installing company has completed work that requires diagnostic testing and field verification for compliance. The building permit applicant shall make arrangements for transmittal of MECH-1-C data to the provider data registry identifying the building features and measures requiring HERS verification. The building permit applicant shall also submit a copy of the approved/signed MECH-1-C to the HERS rater.~~

~~The installer shall perform diagnostic testing and the procedures specified in Section NA1-4. When the installation is complete, the installer shall complete the *Installation Certificate portion of the MECH-5-A*, post a copy at the building site for review by the building inspector, and submit a signed copy to the building department. The installer shall also provide a signed copy of the installer's certification portion of the MECH-5-A to the HERS rater.~~

~~The building permit applicant shall complete the applicable portions of a MECH-1. The HERS rater shall manually enter, or make arrangements for transmittal of the MECH-5-A installation certification information, for features requiring HERS verification to the HERS provider data registry. If group sampling is utilized for compliance, the HERS rater shall define the group for sampling purposes asrequiring that all units where for which the building permit applicant has chosen to have testing and field verification completed as part of a sampleshall have been serviced by the same installing company. The group shall be no larger than seven. The installing company may request a smaller group for sampling. Whenever the HERS rater for an installing company is changed, a new group shall be established. Initial field verification and testing shall be completed for the first unit in each group. Re-sampling, full testing and corrective action shall be completed if necessary as specified by Section NA1-5.3. 7.5.3. For alterations, the installing company shall offer to complete field verification and diagnostic testing and any necessary corrective action at no charge to building owners in the group.~~

~~Field verification and diagnostic testing may be completed by an approved tThird -pParty qQuality cControl pPrograms, as specified in Section NA1-6,. may also be used with alterations. The group for sampling purposes shall be no larger than 30 when a third-party quality control program is used. The third-party quality control program may define the group instead of the provider. When a third-party quality control program is used, the MECH-5MECH-5-A shall document that data checking has indicated that the unit complies.~~

~~The building department shall not close a building permit until the building department has received a completed installation certification portion of a MECH-5-A that has been signed by the installer, and a completed, certified copy of the HERS verification portion of the MECH-5-A from the provider that has been signed by the HERS rater.~~

~~The building official may approve compliance based on the MECH-5 where data checking has indicated that the unit complies, on the condition that if sampling indicates that re-sampling, full testing, and corrective action is necessary, such work shall be completed.~~

~~Summary of Responsibilities~~

~~This section summarizes responsibilities described previously in this chapter and organizes them by the responsible party.~~

~~Builder~~

~~The builder shall make arrangements for transmittal of the MECH-1-C information, for features requiring HERS verification, to the data registry of a HERS provider. The builder shall make arrangements for the services of a certified HERS rater prior to installation of the duct systems, so that once the installation is complete the HERS rater has ample time to complete the field verification and diagnostic testing without delaying final approval of occupancy building permit by the building department. The Builder shall provide to the HERS Rater a copy of the MECH-1-C that was approved/signed by the principal designer/owner and submitted to the building department.~~

~~The builder's employees or subcontractors responsible for completing the performance of the installationdiagnostic testing, as specified in Section 7.5 shall sign the installation certification portion of the MECH-5-A to certify the diagnostic testing results and that the installation work meets the requirements for compliance credit shown on the MECH-1-C, and the verification and diagnostic test results information reported on the installers portion of the MECH-5-A are accurate. The builder or subcontractor shall post a copy of the installation certification portion of the MECH-5-A at the construction site for review by the building inspector, and submit a signed copy of the installation certification portion of the MECH-5-A to the building department in conjunction with requests for final inspection for each dwelling unit. The builder, or subcontractor shall also provide a copy of the installation certification portion of the MECH-5MECH-5-A to the HERS rater.~~

~~If the builder chooses to haveutilizes group sampling for HERS compliance, the builder or the HERS rater shall identify the units to be included in the sample group for field verification and diagnostic testingcompleted through sampling, as specified by section NA1-5. the builder shall identify for the HERS provider the group of space conditioning units to be included in the sample. The builder shall provide the HERS provider a copy of the MECH-5 with the installer's portion signed by the builder employees or sub-contractors, certifying that diagnostic testing and installation meet the requirements for compliance credit.~~

~~The builder shall provide arrange for submittal of a certified copy of the HERS verification portion of the MECH-5MECH-5-Asigned and dated by the HERS rater as specified by section NA1-5, to the building official in conjunction with requests for final inspection for each individual single zone package space conditioning equipment unit.~~

~~HERS Provider and Rater~~

~~The HERS provider shall maintain a list of the space conditioning units in the group from which sampling is drawn, the units selected for sampling, the units sampled and the results of the sampling, the units selected for re-sampling, the units that have been tested and verified as a result of re-sampling, the corrective action taken, and copies shall retain records of all information content and approval signatures for completed MECH-1C forms, completed installer certification portions of MECH-5-A forms, and completed HERS verification portions of completed MECH-5MECH-5-A forms for a period of five years per Title 20 section 1673(d).~~

~~The HERS rater providing the diagnostic testing and verification shall transmit the test results to the HERS provider data registry. sign and date a MECH-5certifying that he/she has verified that the requirements for compliance credit have been met. A certified HERS verification portion of MECH-5MECH-5-A from the provider and signed by the rater shall be provided for the tested space conditioning unit and each of up to six other units from the a designated group for which compliance is verified based on the results of the sample. The HERS rater provider's certified copy of the HERS verification portion of the MECH-5-A shall be made available or submitted to the HERS Rater,provide copies of the signed MECH-5 to the builder, the HERS provider, and the building department.~~

~~The HERS rater shall produce a separate MECH-5A HERS verification forms for each unit that meets the diagnostic requirements for compliance. The HERS rater shall identify on the MECH-5certified copy of the MECH-5-A HERS verification shall have unique HERS provider-designated identifiers for lot location, certification number and sample group number, and shall include building permit number, time and date stamp, provider Logo or seal, and indicate if the space conditioning unit has been tested or if it was an untested unit approved as part of sample testing. The HERS rater shall not sign produce a MECH-5-A HERS verification~~

~~formMECH-5MECH-5-A for a building with a space conditioning unit that does not have the installer's portion of the MECH-5MECH-5-A signed by the installer as required in Section NA1-5. 7.5.~~

~~If field verification and diagnostic testing on a sampled space conditioning unit identifies a failure to meet the requirements for compliance credit, the HERS rater shall report to the HERS provider, the builder, and the building department that re-sampling will be required.~~

~~If re-sampling identifies another failure, the HERS rater shall report to the HERS provider, the builder, and the building department that corrective action and diagnostic testing and field verification will be required for all the untested space conditioning units in the group. This report shall identify each space conditioning unit that shall be fully tested and corrected.~~

~~The HERS provider shall also report to the builder once diagnostic testing and field verification has shown that the failures have been corrected for all of the space conditioning units.~~

~~When individual space conditioning unit testing and verification confirms that the requirements for compliance have been met, the HERS rater shall provide make available a certified copy of the HERS verification portion of the signed and dated MECH-5MECH-5-A for each space conditioning unit in the group.~~

~~The HERS provider shall file a report with the building department if there has been a sample group failure, explaining all actions taken (including field verification, testing, and corrective actions) to bring into compliance space conditioning units for which full testing has been required.~~

~~Third-Party Quality Control Program~~

~~An approved third-party quality control program shall:~~

~~Provide training to participating program installing contractors, installing technicians, and specialty Third Party Quality Control Program subcontractors regarding compliance requirements for measures for which diagnostic testing and field verification is required,~~

~~Collect data from participating installers for each installation completed for compliance credit,~~

~~Complete data checking analysis to evaluate the validity and accuracy of the data to independently determine whether compliance has been achieved,~~

~~Provide direction to the installer to retest and correct problems when data checking determines that compliance has not been achieved,~~

~~Require resubmission of data when retesting and correction is directed, and~~

~~Maintain a database of all data submitted in a format that is acceptable to the Commission and available to the Commission upon request.~~

~~The third-party quality control programHERS provider shall obtain arrange for the services of an independent HERS rater to conduct independent field verifications of the installation work performed by the participating installing contractor and the Third Party Quality Control Program, completing all of the responsibilities of a HERS rater as specified in this Chapter with the exception that sampling shall be completed for a group of up to 30 space conditioning units, and sampling and re-sampling shall be completed for a minimum of one out of every 30 sequentially completed units from the group.~~

~~Building Department~~

~~When the Certificate of Compliance (MECH-1MECH-1-C) indicates duct sealing requiring HERS diagnostic testing and field verification for compliance, the building department shall verify that the Documentation Author has notified the HERS provider before accepting the MECH-1MECH-1-C.~~

~~The building department at its discretion may require independent testing and field verification to be scheduled so that it can be completed in conjunction with the building department's required inspections, and/or observe the diagnostic testing and field verification performed by builder employees or subcontractors and the certified HERS rater in conjunction with the building department's required inspections to corroborate the results documented in installer certifications, and HERS rater field verifications on the MECH-5MECH-5-A.~~

~~For space conditioning units that have used a compliance alternative that requires field verification and diagnostic testing,~~

~~The building department shall not approve a building with individual single zone package space conditioning equipment for occupancy until the building department has received MECH-5MECH-5-A installation certification documentation that has been signed by the builder/owner or installing subcontractor, and a certified copy of the MECH-5-A HERS verification documentation that has been made available by the HERS Provider, and signed and dated by the HERS rater.~~

NA2.1.1 Purpose and Scope

NA2 contains procedures for measuring the air leakage in single zone, nonresidential air distribution systems. The methods described here apply to single zone, constant volume heating and air conditioning systems serving zones with 5000 ft^2 of floor area or less, with duct systems located in unconditioned or semi-conditioned buffer spaces or outdoors. Field measurement and verification procedures must be performed if a reduced duct leakage credit is claimed. These procedures apply to new buildings or new air conditioning systems applied to existing buildings.

The Nonresidential ACM Manual contains calculation procedures for determining distribution efficiency of single-zone nonresidential air distribution systems serving 5,000 ft^2 or less. By default, duct leakage is assumed to be untested.

NA2.2 Instrumentation Specifications

The instrumentation for the air distribution diagnostic measurements shall conform to the following specifications:

NA2.2.1 Pressure Measurements

All pressure measurements shall be measured with measurement systems (i.e. sensor plus data acquisition system) having an accuracy of ± 0.2 Pa. All pressure measurements within the duct system shall be made with static pressure probes.

NA2.2.2 Duct Leakage Measurements

The measurement of air flows during duct leakage testing shall have an accuracy of ±3% of measured flow using digital gauges.

All instrumentation used for duct leakage diagnostic measurements shall be calibrated according to the manufacturer's calibration procedure to conform to the above accuracy requirement. All testers performing diagnostic tests shall obtain evidence from the manufacturer that the equipment meets the accuracy specifications. The evidence shall include equipment model, serial number, the name and signature of the person of the test laboratory verifying the accuracy, and the instrument accuracy. All diagnostic testing equipment is subject to re-calibration when the period of the manufacturer's guaranteed accuracy expires.

NA2.2.3 Duct Pressurization Apparatus

The apparatus for fan pressurization duct leakage measurements shall consist of duct pressurization and flow measurement device meeting the specifications in Section NA2.2.

NA2.3 Procedure

The following sections identify input values for building and HVAC system (including ducts) using either default or diagnostic information.

NA2.3.1 Building Information and Defaults

The calculation procedure for determining air distribution efficiencies requires the following building information:

1. climate zone for the building,

2. conditioned floor area,

3. number of stories,

4. areas and U-values of surfaces enclosing space between the roof and a ceiling, and

5. surface area of ductwork if ducts are located outdoors or in multiple spaces.

Using default values rather than diagnostic procedures produce relatively low air distribution-system efficiencies. Default values shall be obtained from following sections:

1. the location of the duct system in SectionNA2.3.4,

2. the surface area and insulation level of the ducts in SectionNA2.3.3.1 and Section NA2.3.5.1,

3. the system fan flow in SectionNA2.3.6, and

4. the leakage of the duct system in Section NA2.3.8

NA2.3.2 Diagnostic Input

Diagnostic inputs are used for the calculation of improved duct efficiency. The diagnostics include observation of various duct characteristics and measurement of duct leakage and system fan flows as described in Sections NA2.3.3 through NA2.3.8. These observations and measurements replace those assumed as default values.

The diagnostic procedures include:

- Measurement of total duct system leakage as described in Section NA2.3.8.
- Measurement of duct surface area if ducts are located outdoors or in multiple spaces as described in Section NA2.3.3.2.
- Observation of the insulation level for the supply (R_s) and return (R_r) ducts outside the conditioned space as described in Section NA2.3.5.2.
- Observation of the presence of a cool roof.
- Observation of the presence of an outdoor air economizer.

NA2.3.3 Duct Surface Area

The supply-side and return-side duct surface areas shall be calculated separately. If the supply or return duct is located in more than onespace, the area of that duct in each space shall be calculated separately. The duct surface area shall be determined using one of the following methods.

NA2.3.3.1 Default Duct Surface Area

The default duct surface area for supply and return shall be calculated as follows:

For supplies:

Equation NA2-1

$$A_{s,total} = K_s A_{floor}$$

Where K_s (supply duct surface area coefficient) shall be 0.25 for systems serving the top story only, 0.125 for systems serving the top story plus one other, and 0.08 for systems serving three or more stories.

For returns:

Equation NA2-2

$$A_{r,total} = K_r \quad A_{floor}$$

Where K_r (return duct surface area coefficient) shall be 0.15 for systems serving the top story only, 0.125 for systems serving the top story plus one other, and 0.08 for systems servings three or more stories.

If ducts are located outdoors, the outdoor duct surface area shall be calculated from the duct layout on the plans using measured duct lengths and nominal inside diameters (for round ducts) or inside perimeters (for rectangular ducts) of each outdoor duct run in the building that is within the scope of the calculation procedure. When using the default duct area, outdoor supply duct surface area shall be less than or equal to the default supply duct surface area; outdoor return duct surface area shall be less than or equal to the default return duct surface area.

The surface area of ducts located in the buffer space between ceilings and roofs shall be calculated from:

Equation NA2-3

$$A_{s,buffer} = A_{s,total} - A_{s,outdoors}$$

Equation NA2-4

$$A_{r,buffer} = A_{r,total} - A_{r,outdoors}$$

NA2.3.3.2 Measured Duct Surface Area

Measured duct surface areas shall be used when the outdoor duct surface area measured from the plans is greater than default duct surface area for either supply ducts or return ducts. If a duct system passes through multiple spaces that have different ambient temperature conditions as specified in NACM Appendix N2, the duct surface area shall be measured for each space individually. The duct surface area shall be calculated from measured duct lengths and nominal inside diameters (for round ducts) or inside perimeters (for rectangular ducts) of each duct run located in buffer spaces or outdoors.

NA2.3.4 Duct Location

Duct systems covered by this procedure are those specified in the Standards §144(k)3.

NA2.3.5 Duct Wall Thermal Resistance

NA2.3.5.1 Default Duct Insulation R value

Default duct wall thermal resistance for new buildings is R-8.0, the mandatory requirement for ducts installed in newly constructed buildings, additions and new or replacement ducts installed in existing buildings. Default duct wall thermal resistance for existing ducts in existing buildings is R-4.2. An air film resistance of 0.7 [h ft^2 ^oF/BTU] shall be added to the duct insulation R value to account for external and internal film resistance.

NA2.3.5.2 Diagnostic Duct Wall Thermal Resistance

Duct wall thermal resistance shall be determined from the manufacturer's specification observed during diagnostic inspection. If ducts with multiple R values are installed, the lowest duct R value shall be used. If a duct with a higher R value than 8.0 is installed, the R-value shall be clearly stated on the building plans and a visual inspection of the ducts must be performed to verify the insulation values.

NA2.3.6 Total Fan Flow

The total fan flow for an air conditioner or a heat pump for all climate zones shall be equal to 400 cfm/rated ton with rated tons defined by unit scheduled capacity at the conditions the unit's ARI rating standard from Section 112 of the Standards. Airflow through heating only furnaces shall be based on 21.7 cfm/kBtuh rated output capacity.

NA2.3.7 Duct Leakage Factor for Delivery Effectiveness Calculations

Default duct leakage factors for the Proposed Design shall be obtained from Table NA2-1, using the "Untested" values.

Duct leakage factors for the Standard Design shall be obtained from Table NA2-2, using the appropriate "Tested" value.

Duct leakage factors shown in Table NA2-1 shall be used in calculations of delivery effectiveness contained in the Nonresidential ACM Manual.

Table NA2-1 Duct Leakage Factors

	as = ar =
Untested duct systems	0.82
Sealed and tested duct systems in existing buildings, System tested after HVAC equipment and/or duct installation	0.915
Sealed and tested new duct systems. System tested after HVAC system installation	0.96

NA2.3.8 Diagnostic Duct Leakage

Diagnostic duct leakage measurement is used by installers and raters to verify that total leakage meets the criteria for any sealed duct system specified in the compliance documents. Table NA2-2 shows the leakage criteria and test procedures that may be used to demonstrate compliance. In addition to the minimum tests shown, existing duct systems may be tested to show they comply with the criteria for new duct systems.

Table NA2-2 Duct Leakage Tests

Case	User and Application	Leakage criteria, % of total fan flow	Procedure
Sealed and tested new duct systems	Installer Testing HERS Rater Testing	6%	NA2.3.8.1
Sealed and tested altered existing duct systems	Installer Testing HERS Rater Testing	15% Total Duct Leakage	NA2.3.8.1
	Installer Testing and Inspection HERS Rater Testing and Verification	60% Reduction in Leakage and Visual Inspection	NA2.3.8.2 NA2.3.8.4
	Installer Testing and Inspection HERS Rater Testing and Verification	Fails Leakage Test but All Accessible Ducts are Sealed And Visual Inspection	NA2.3.8.3 NA2.3.8.4

NA2.3.8.1 Total Duct Leakage Test from Fan Pressurization of Ducts

The objective of this procedure is for an installer to determine or a rater to verify the total leakage of a new or altered duct system. The total duct leakage shall be determined by pressurizing both the supply and return

ducts to 25 Pascals with all ceiling diffusers/grilles and HVAC equipment installed. When existing ducts are to be altered, this test shall be performed prior to and after duct sealing. The following procedure shall be used for the fan pressurization tests:

1. Verify that the air handler, supply and return plenums and all the connectors, transition pieces, duct boots, and registers are installed. The entire system shall be included in the test.
2. For newly installed or altered ducts, verify that cloth backed rubber adhesive duct tape has not been used.
3 Seal all the supply and return registers, except for one return register or the system fan access. Verify that all outside air dampers and/or economizers are sealed prior to pressurizing the system.
4. Attach the fan flowmeter device to the duct system at the unsealed register or access door.
5. Install a static pressure probe at a supply.
6. Adjust the fan flowmeter to produce a 25 Pascal (0.1 in water) pressure difference between the supply duct and the outside or the building space with the entry door open to the outside.
7. Record the flow through the flowmeter ($Q_{total,25}$) - this is the total duct leakage flow at 25 Pascals.
8. Divide the leakage flow by the total fan flow and convert to a percentage. If the leakage flow percentage is less than 6% for new duct systems or less than 15% for altered duct systems, the system passes.

Duct systems that have passed this total leakage test will be tested by a HERS rater to show compliance.

NA2.3.8.2 Leakage Improvement from Fan Pressurization of Ducts

For altered existing duct systems which have a higher leakage percentage than the Total Duct leakage criteria in Section NA2.3.8.1, the objective of this test is to show that the original leakage is reduced through duct sealing as specified in Table NA2-2. The following procedure shall be used:

1. Use the procedure i n NA2.3.8.1 to measure the leakage before commencing duct sealing.
2. After sealing is complete use the same procedure to measure the leakage after duct sealing.
3. Subtract the sealed leakage from the original leakage and divide the remainder by the original leakage. If the leakage reduction is 60% or greater of the original leakage, the system passes.
4. Complete the Visual Inspection specified in NA2.3.8.4.

Duct systems that have passed this leakage reduction test and the visual inspection test will be tested by a HERS rater to show compliance.

NA2.3.8.3 Sealing of All Accessible Leaks

For altered existing duct systems that do not pass the total leakage test (NA2.3.8.1), the objective of this test is to show that all accessible leaks are sealed and that excessively damaged ducts have been replaced. The following procedure shall be used:

1. Complete each of the leakage tests
2. Complete the Visual Inspection as specified in NA2.3.8.4.

All duct systems that could not pass either the total leakage test or the leakage improvement test will be tested and inspected by a HERS rater to show that all accessible ducts have been sealed and excessively damaged ducts have been replaced. This requires a sampling rate of 100%.

NA2.3.8.4 Visual Inspection of Accessible Duct Sealing

For altered existing duct systems that fail to be sealed to 15% of total fan flow, the objective of this inspection is to confirm that all accessible leaks have been sealed and that excessively damaged ducts have been replaced. The following procedure shall be used:

1. Visually inspect to verify that the following locations have been sealed:

- Connections to plenums and other connections to the forced air unit
- Refrigerant line and other penetrations into the forced air unit
- Air handler door panel (do not use permanent sealing material, metal tape is acceptable)
- Register boots sealed to surrounding material
- Connections between lengths of duct, as well as connections to takeoffs, wyes, tees, and splitter boxes.

2. Visually inspect to verify that portions of the duct system that are excessively damaged have been replaced. Ducts that are considered to be excessively damaged are:

- Flex ducts with the vapor barrier split or cracked with a total linear split or crack length greater than 12 inches
- Crushed ducts where cross-sectional area is reduced by 30% or more
- Metal ducts with rust or corrosion resulting in leaks greater than 2 inches in any dimension
- Ducts that have been subject to animal infestation resulting in leaks greater than 2 inches in any dimension

NA2.3.8.5 Labeling requirements for tested systems

A sticker shall be affixed to the exterior surface of the air handler access door with the following text in 14 point font:

"The leakage of the air distribution ducts was found to be CFM @ 25 Pascals or % of total fan flow.

This system (check one):

*Has a leakage rate that is **equal to or lower** than the prescriptive requirement of 6% leakage for new duct systems or 15% leakage for alterations to existing systems. It meets the prescriptive requirements of California Title 24 Energy Efficiency Standards.*

*Has a leakage rate **higher than** 6% leakage for new duct systems or 15% leakage for altered existing systems. It does NOT meet the meet or exceed the prescriptive requirements of the Title 24 standards. However, all accessible ducts were sealed.*

Signed: _____

Print name: _____

Print Company Name: _____

Print Contractor License No: _____

Print Contractor Phone No: _____

Do not remove sticker"

NA2.4 Definitions

aerosol sealant closure system: A method of sealing leaks by blowing aerosolized sealant particles into the duct system which must include minute-by-minute documentation of the sealing process.

buffer space: an unconditioned or indirectly conditioned space located between a ceiling and the roof.

delivery effectiveness: The ratio of the thermal energy delivered to the conditioned space and the thermal energy entering the distribution system at the equipment heat exchanger.

distribution system efficiency: The ratio of the thermal energy consumed by the equipment with the distribution system to the energy consumed if the distribution system had no losses or impact on the equipment or building loads.

equipment efficiency: The ratio between the thermal energy entering the distribution system at the equipment heat exchanger and the energy being consumed by the equipment.

equipment factor : F_{equip} is the ratio of the equipment efficiency including the effects of the distribution system to the equipment efficiency of the equipment in isolation.

fan flowmeter device*:* A device used to measure air flow rates under a range of test pressure differences.

flow capture hood**:** A device used to capture and measure the airflow at a register.

load factor : F_{load} is the ratio of the building energy load without including distribution effects to the load including distribution system effects.

pressure pan : a device used to seal individual forced air system registers and to measure the static pressure from the register.

recovery factor : F_{recov} is the fraction of energy lost from the distribution system that enters the conditioned space.

thermal regain: The fraction of delivery system losses that are returned to the building.

Nonresidential Appendix NA3 – 2008

Appendix NA3 – Fan Motor Efficiencies

Table N~~R~~A3-1 Fan Motor Efficiencies (< 1 HP)

Nameplate or Brake Horsepower	Standard Fan Motor Efficiency	NEMA* High Efficiency	Premium Efficiency
1/20	40%	...	...
1/12	49%	...	...
1/8	55%	...	...
1/6	60%	...	...
1/4	64%	...	...
1/3	66%	...	...
1/2	70%	76.0%	80.0%
3/4	72%	77.0%	84.0%
NOTE: For default drive efficiencies, see NONRESIDENTIAL ACM Manual Table N2-17.			
*NEMA - Proposed standard using test procedures.			
Minimum NEMA efficiency per test IEEE 112b Rating Method.			

Table N~~R~~A3-~~-~~2 Fan Motor Efficiencies (1 HP and over)

	Open Motors				Enclosed Motors			
Motor Horsepower	2 pole 3600 rpm	4 pole 1800 rpm	6 pole 1200 rpm	8 pole 900 rpm	2 pole 3600 rpm	4 pole 1800 rpm	6 pole 1200 rpm	8 pole 900 rpm
1	—	82.5	80.0	74.0	75.5	82.5	80.0	74.0
1.5	82.5	84.0	84.0	75.5	82.5	84.0	85.5	77.0
2	84.0	84.0	85.5	85.5	84.0	84.0	86.5	82.5
3	84.0	86.5	86.5	86.5	85.5	87.5	87.5	84.0
5	85.5	87.5	87.5	87.5	87.5	87.5	87.5	85.5
7.5	87.5	88.5	88.5	88.5	88.5	89.5	89.5	85.5
10	88.5	89.5	90.2	89.5	89.5	89.5	89.5	88.5
15	89.5	91.0	92.0	89.5	90.2	91.0	90.2	88.5
20	90.2	91.0	91.0	90.2	90.2	91.0	90.2	89.5
25	91.0	91.7	91.7	90.2	91.0	92.4	91.7	89.5
30	91.0	92.4	92.4	91.0	91.0	92.4	91.7	91.0
40	91.7	93.0	93.0	91.0	91.7	93.0	93.0	91.0
50	92.4	93.0	93.0	91.7	92.4	93.0	93.0	91.7
60	93.0	93.6	93.6	92.4	93.0	93.6	93.6	91.7
75	93.0	94.1	93.6	93.6	93.0	94.1	93.6	93.0
100	93.0	94.1	94.1	93.6	93.6	94.5	94.1	93.0
125	93.6	94.5	94.1	93.6	94.5	94.5	94.1	93.6
150	93.6	95.0	94.5	93.6	94.5	95.0	95.0	93.6
200	94.5	95.0	94.5	93.6	95.0	95.0	95.0	94.1
250	94.5	95.0	95.4	94.5	95.4	95.0	95.0	94.5
300	95.0	95.4	95.4	—	95.4	95.4	95.0	—
350	95.0	95.4	95.4	—	95.4	95.4	95.0	—
400	95.4	95.4	—	—	95.4	95.4	—	—
450	95.8	95.8	—	—	95.4	95.4	—	—
500	95.8	95.8	—	—	95.4	95.8	—	—

Nonresidential Appendix NA4 – 2008

Appendix NA4 – Compliance Procedures for Relocatable Public School Buildings

NA4.1 Purpose and Scope

This document describes the compliance procedures that shall be followed when the whole building performance approach is used for relocatable public school buildings. Relocatable public school buildings are constructed (manufactured) at a central location and could be shipped and installed in any California climate zone. Furthermore, once they arrive at the school site, they could be positioned so that the windows face in any direction. The portable nature of relocatable classrooms requires that a special procedure be followed for showing compliance when the whole building performance method is used. Compliance documentation for relocatable public school buildings will be reviewed by the Division of the State Architect.

NA4.2 The Plan Check Process

The Division of the State Architect (DSA) is the building department for relocatable public school buildings. Since relocatables are manufactured in batches, like cars or other manufactured products, the plan check and approval process occurs in two phases. The first phase is when the relocatable manufacturer completes design of a model or modifies a model. At this point, complete plans and specifications are submitted to the DSA; DSA reviews the plans for compliance with the energy standards and other California Building Code (CBC) requirements; and a "pre-check" (PC) design approval is granted. Once the PC design is approved, a school district or the manufacturer may file an "over-the-counter" application with DSA to construct one or more ~~relocatables .~~ relocatables. The over-the-counter application is intended to be reviewed quickly, since the PC design has already been pre-checked. The over-the-counter application is the building permit application for construction and installation of a relocatable at a specific site, and includes the approved PC design drawings as well as site development plans for the proposed site where the relocatable will be installed. An over-the-counter application also is required for the construction of a stockpile of one or more relocatables based on the approved PC design drawings. Stockpiled relocatables are stored typically at the manufacturer's yard until the actual school site is determined where the relocatable will be installed. Another over-the-counter application is required to install a previously stockpiled relocatable at which time site development plans for the proposed site are checked.

The effective date for all buildings subject to the energy standards is the date of permit application. If a building permit application is submitted on or after the effective date, then the new energy standards apply. For relocatable classrooms, the date of the permit application is the date of the over-the-counter application, not the date of the application for PC design approval. The PC design is only valid until the code changes.

NA4.3 The Compliance Process

Like other nonresidential buildings, the standard design for relocatable public school buildings is defined by the prescriptive requirements. In the case of relocatables, there are two choices of prescriptive criteria:

- Table 143-C in the Standards may be used for relocatable school buildings that can be installed in any climate zone in the state. In this case, the compliance is demonstrated in climates 14, 15, and 16 and this is accepted as evidence that the classroom will comply in all climate zones. These relocatables will have a permanent label that allows it to be used anywhere in the state.
- Table 143-A in the Standards may be used for relocatable school buildings that are to be installed in only specific climate zones. In this case, compliance is demonstrated in each climate zone for which the

relocatable has been designed to comply. These relocatables will have a permanent label that identifies in which climate zones it may be installed. It is not lawful to install the relocatable in other climate zones.

The building envelope of the standard design has the same geometry as the proposed design, including window area and position of windows on the exterior walls, and meets the prescriptive requirements specified in §Section143 of the Standards. Lighting power for the standard design meets the prescriptive requirements specified in §Section1~~.~~ 146 of the Standards. The HVAC system for the standard design meets the prescriptive requirements specified in §Section144 of the Standards. The system typically installed in relocatables is a single-zone packaged heat pump or furnace. Most relocatable school buildings do not have water heating systems, so this component is neutral in the analysis. Other modeling assumptions such as equipment loads, are the same for both the proposed design and the standard design and are specified in the Nonresidential ACM Manual.

Manufacturers shall certify compliance with the standards and all compliance documentation shall be provided. If the manufacturer chooses to comply using Table 143-A in the Standards for compliance in only specific climate zones, then the manufacturers shall indicate the climates zones for which the classroom will be allowed to be located.

Since relocatable public school buildings could be positioned in any orientation, it is necessary to perform compliance calculations for multiple orientations. Each model with the same proposed design energy features shall be rotated through 12 different orientations either in climate zones 14, 15 and 16 for relocatables showing statewide compliance or in the specific climate zones that the manufacturer proposes for the relocatable to be allowed to be installed, i.e., the building with the same proposed design energy features is rotated in 30 degree increments and shall comply in each case. Approved compliance programs shall automate the rotation of the building and reporting of the compliance results to insure it is done correctly and uniformly and to avoid unnecessary documentation.

NA4.4 Documentation

The program shall present the results of the compliance calculations in a format similar to Table NA4-1. For each of the cases (12 orientations times number of climates), the Time Dependent Valuation (TDV) energy for the *Standard Design* and the *Proposed Design* are shown (the energy features of the *Proposed Design* shall be the same for all orientations). The final column shows the compliance margin, which is the difference between the TDV energy for the *Proposed Design* and the *Standard Design*. Approved compliance programs shall scan the data presented in the Table NA4-1 format and prominently highlight the case that has the smallest compliance margin. Complete compliance documentation shall be submitted for the building and energy features that achieve compliance in all of the climate zones and orientations as represented by the case with the smallest margin. DSA may require that compliance documentation for other cases also be submitted; showing that the *Proposed Design* building and energy features are identical to the case submitted, in each orientation and climate zone. Table NA4-1 shows rows for climate zones 14, 15, and 16, which are the ones used when the criteria of Table 143-C in the Standards is used to show compliance throughout the state. If the criteria of Table 143-A in the Standards is used, then rows shall be added to the table for each climate zone for which the manufacturer wants the relocatable to be allowed to be installed.

Table NA4~~D~~-1 – Summary of Compliance Calculations Needed for Relocatable Classrooms

		TDV Energy		
Climate Zone	Azimuth	Proposed Design	Standard Design	Compliance Margin
14	0			
	30			
	60			
	90			
	120			
	150			
	180			
	210			
	240			
	270			
	300			
	330			
15	0			
	30			
	60			
	90			
	120			
	150			
	180			
	210			
	240			
	270			
	300			
	330			
16	0			
	30			
	60			
	90			
	120			
	150			
	180			
	210			
	240			
	270			
	300			
	330			

NA4.5 Optional Features

Relocatable classrooms may come with a variety of optional features, like cars. A school district can buy the "basic model" or it can pay for options. Many of the optional features do not affect energy efficiency and are not significant from the perspective of energy code compliance. Examples include floor finishes (various grades of carpet or tiles), casework, and ceiling and wall finishes. Other optional features do affect energy performance such as window construction, insulation, lighting systems, lighting controls, HVAC ductwork, HVAC equipment, and HVAC controls.

When a manufacturer offers a relocatable classroom model with a variety of options, it is necessary to identify those options that affect energy performance and to show that the model complies with any combination of the optional features. Most of the time, optional energy features are upgrades that clearly improve performance. If the basic model complies with the Standards, then adding any or all of the optional features would improve performance. The following are examples of optional features that are clear upgrades in terms of energy performance:

- HVAC equipment that has both a higher SEER and higher EER than the equipment in the basic model.
- Lighting systems that result in less power than the basic model.
- Lighting controls, such as occupancy sensors, that are recognized by the standards and for which power adjustment factors in Table 146-~~A~~ C are published in Section 146 of the Standards.
- Windows that have both a lower SHGC and lower U-factor (limited to relocatables that do not take credit for daylighting).
- Wall, roof or floor construction options that result in a lower U-factor than the basic model.

For energy code compliance purposes, it is necessary to show that every variation of the relocatable classroom that is offered to customers will comply with the Standards. There are two approaches for achieving this, as defined below:

1) Basic Model Plus Energy Upgrades Approach The simplest approach is to show that the basic model complies with the Standards and that all of the options that are offered to customers are clear energy upgrades that would only improve performance. As long as each and every measure in the basic model is met or exceeded by the energy upgrades, the relocatable classroom will comply with the standards.

While clear upgrades are obvious in most cases, the following are some examples of options that are not energy upgrades, for which additional analysis would be needed to show compliance that every combination of options comply.

- HVAC equipment that has a higher SEER, but a lower EER.
- Windows that lower SHGC but increase U-factor, or vice versa.
- Insulation options that reduce the U-factor for say walls, but increase it for the roof.
- Any other combination of measures that results in the performance of anyone measure being reduced in comparison to a complying basic model.

2) Modeling of Every Combination Approach. A more complex whole building performance approach is required when a model is available with options which in combination may or may not comply. In this case every combination of options shall be modeled, and the specific combinations that comply shall be determined and only those combinations shall be allowed. This approach, while possible, requires considerably more effort on the part of the relocatable manufacturer and its energy consultant. It also places a greater burden on DSA when they issue the over-the-counter building permit for the PC design that only allows specific combinations of energy options.~~.~~ DSA would have to examine the specific optional features that are proposed with the over-the-counter application and make sure that the proposed combination of measures achieves compliance.

The manufacturer or its energy consultant would need to prepare a table or chart that shows all of the acceptable combinations that achieve compliance. This chart could be quite complex, depending on the number of optional features that are offered.

Table N~~A~~4-2 is intended to illustrate the complexity that could be involved in modeling of every combination of energy features. It shows a list of typical optional features that would affect energy performance. In this example, there are two possible for each of the eight options, e.g the feature is either there or not (in an actual case there could be a different number of options and a different number of states for any option). In the example any one of the features could be combined with any of the others. The number of possible combinations in this example is two (the number of states) to the eighth power (the number of measures that

have two states). The number of possible options is then 2^8 or 256. This is the number of combinations that would need to be modeled in order to determine which combination~~s~~ of optional features achieves compliance.

Table NA4~~D~~-2 – Examples of Optional Features for Relocatable Classrooms

	Options Offered	States
1	Efficient lighting option	Yes/No
2	High efficiency heat pump	Yes/No
3	Improved wall insulation	Yes/No
4	Improved roof insulation	Yes/No
5	Occupancy sensor for lighting	Yes/No
6	Low-e windows	Yes/No
7	Skylights	Yes/No
8	Daylighting Controls	Yes/No

Nonresidential Appendix NA5 – 2008

Appendix NA5 – Envelope Tradeoff Procedure

NA5.1 Scope

This reference appendix describes the calculations that shall be used for making building envelope tradeoffs which are referenced in Section143(b) of the Standard. The methodology in this reference appendix yields estimates of TDV energy for both the standard design and the proposed design building envelope. Compliance is achieved with Section143(b) of the Standards when the total TDV energy of the proposed design is no greater than the TDV energy of the standard design, as determined by the methods described in this appendix. In making the calculations, it shall be assumed that the orientation and area of each envelope component of the standard design are the same as in the proposed design. In most cases, the window area and skylight area of the standard design shall be the same as the proposed design, however, in some instances, the window and/or skylight area of the standard design may be reduced to limits established by the prescriptive standards. This is addressed in more detail below.

The requirements of Section 143(c) may not be traded off through this procedure.

NA5.2 TDV Energy of the Standard Design

Equation NA5-1 shall be used to calculate the TDV energy of the standard design. Values for wall, floor, roof, door and glazing U-factors shall be taken from the prescriptive requirements for the relevant climate zone and occupancy from the Standards Table 143-A, Table 143-B or Table 143-C as appropriate. Values for window solar heat gain coefficients shall be taken from the prescriptive relative solar heat gain requirement from the Standards Table 143-A, Table 143-B or Table 143-C as appropriate. For roof replacements that trigger insulation upgrades and cool roof requirements, the criteria are specified in Section149 of the Standard. The value for visible light transmittance (VLT) of each window component shall be 1.2 times the solar heat gain coefficient (SHGC) of the window.

Equation NA5-1

$$
\begin{aligned}
TDV_{std} = & \sum_{i=1}^{nW} c_{Wu,i} \times \left(A_{W,i}^{Std} \times U_{W,i}^{Std}\right) + \sum_{i=1}^{nG} A_{G,i}^{Std} \times \left[\left(c_{Gu,i} \times U_{G,i}^{Std}\right) + \left(c_{Gs,i} \times SHGC_{G,i}^{Std}\right) + \left(c_{Gt,i} \times VLT_{G,i}^{Std}\right)\right] \\
& + \sum_{i=1}^{nR} c_{Ru,i} \times \left(A_{R,i}^{Std} \times U_{R,i}^{Std}\right) + \sum_{i=1}^{nS} A_{S,i}^{Std} \times \left[\left(c_{Su,i} \times U_{S,i}^{Std}\right) + \left(c_{Ss,i} \times SHGC_{S,i}^{Std}\right) + \left(c_{St,i} \times VLT_{S,i}^{Std}\right)\right] \\
& + \sum_{i=1}^{nF} c_{Fu,i} \times \left(A_{F,i} \times U_{F,i}^{Std}\right) + \sum_{i=1}^{nD} c_{Du,i} \times \left(A_{D,i} \times U_{D,i}^{Std}\right)
\end{aligned}
$$

Where:

TDV_{std}	=	TDV energy of the standard design, for space cooling and heating only
W, F, R, G, S, D	=	Index for the building envelope component type (wall, floor, roof, glazing/window, skylight, and door, respectively)

i	=	Index representing each unique combination of occupancy type (nonresidential, 24-hour, and retail); orientation (applicable only for walls, doors and windows); and coefficient category. For roofs, the categories are attic, light (HC<7) and mass (HC>=7). For floors the categories are light and mass. For walls, the categories are light, medium mass (7≤HC<15) and heavy mass (HC≥15).
nW, nF, nR, nG, nS, nD	=	Number of components of the applicable envelope feature of the standard design (wall, floor, roof, glazing/window, skylight, door)
$A^{Std}_{W,i}$, $A_{F,i}$, $A^{Std}_{R,i}$ $A^{Std}_{G,i}$, $A^{Std}_{S,i}$, $A_{D,i}$	=	Exterior surface area of each building envelope component (in ft²). The index "i" shall indicate each unique combination of construction class and orientation (when appropriate). The window and skylight areas in the standard design may be smaller than the proposed design when adjustments are necessary. When window and/or skylight area is reduced, the area of the parent wall/roof is increased so that the gross area of wall/roof for the standard design is the same as the proposed design.
$U^{Std}_{W,i}$, $U^{Std}_{F,i}$, $U^{Std}_{R,i}$ $U^{Std}_{G,i}$, $U^{Std}_{S,i}$, $U^{Std}_{D,i}$	=	The standard design U-factor in Btu/h- ft²-°F for the wall , floor, roof, window, skylight and door from the Standards TABLE 143-A, TABLE 143-B or TABLE 143-C as appropriate. When the prescriptive requirements varies with class of construction or orientation, the class of construction or orientation used to determine the criteria shall be the same as the proposed design.
$SHGC^{Std}_{G,i}$, $SHGC^{Std}_{S,i}$	=	The relative solar heat gain coefficient for windows and skylights from the Standards TABLE 143-A, TABLE 143-B or TABLE 143-C, as applicable.
$VLT^{Std}_{G,i}$, $VLT^{Std}_{S,i}$	=	The visible light transmittance for the corresponding A_G and A_S. The VLT for the standard design shall be calculated as 1.2 times the standard design SHGC.
$c_{Wu,i}$, $c_{Fu,i}$, $c_{Ru,i}$, $c_{Gu,i}$, $c_{Su,i}$	=	U-factor coefficients for the wall, floor, roof, windows, skylights and doors, respectively. The index "i" represents a unique combination of occupancy, orientation, and coefficient type. The coefficient type is determined based on Table NA5-1.
$c_{Gs,i}$, $c_{Ss,i}$	=	Solar heat gain coefficients for the windows and skylights, respectively. The coefficient "i" is a unique combination of occupancy type and orientation.
$c_{Gt,i}$, $c_{St,i}$	=	Visible light transmission coefficients for the windows and skylights, respectively. The coefficient "i" is a unique combination of occupancy type and orientation.

Table NA5-1 – Coefficient Categories to Use with Construction Types

Table from Reference Joint Appendix JA4 where Proposed Design is Selected	Coefficient Category
Table 4.2.1 – U-factors of Wood Framed Attic Roofs	Roof, Attic
Table 4.2.2 – U-factors of Wood Framed Rafter Roofs	Roof, Light
Table 4.2.3 – U-factors of Structurally Insulated Panels (SIPS) Roof/Ceilings	Roof, Light
Table 4.2.4 – U-factors of Metal Framed Attic Roofs	Roof, Attic
Table 4.2.5 – U-factors of Metal Framed Rafter Roofs	Roof, Light
Table 4.2.6 – U-factors for Span Deck and Concrete Roofs	Roof, Mass
Table 4.2.7 – U-factors for Metal Building Roofs	Roof, Light
Table 4.2.8 – U-factors for Insulated Ceiling with Removable Panels	Roof, Light
Table 4.2.9 – U-factors for Insulated Metal Panel Roofs and Ceilings (Metal SIPS)	Roof, Light
Table 4.3.1 – U-factors of Wood Framed Walls	Wall, Light
Table 4.3.2 – U-factors of Structurally Insulated Wall Panels (SIPS)	Wall, Light
Table 4.3.3 – U-factors of Metal Framed Walls for Nonresidential Construction	Wall, Light
Table 4.3.4 – U-factors for Metal Framed Walls for Low –Rise Residential Construction	Wall, Light
Table 4.3.5 – Properties of Hollow Unit Masonry Walls	Either wall, light; medium; or heavy depending on HC of selected assembly
Table 4.3.6 – Properties of Solid Unit Masonry and Solid Concrete Walls	
Table 4.3.7 – Properties of Concrete Sandwich Panels	
Table 4.3.11 – Thermal Properties of Log Home Walls	
Table 4.3.8 – U-factors for Spandrel Panels and Glass Curtain Walls	Wall, Light
Table 4.3. 9– U-factors for Metal Building Walls	Wall, Light
Table 4.3.10 – U-factors for Insulated Metal Panel Walls (Metal SIPS)	Wall, Light
Table 4.3.12 – Thermal and Mass Properties of Straw Bale Walls	Wall, Light
Table 4.4.1 – Standard U-factors for Wood-Framed Floors with a Crawl Space	Floor, Light
Table 4.4.2 – Standard U-factors for Wood Framed Floors without a Crawl Space	Floor, Mass
Table 4.4.3 – Standard U-factors for Wood Foam Panel (SIP) Floors	Floor, Light
Table 4.4.4 – Standard U-factors for Metal-Framed Floors with a Crawl Space	Floor, Light
Table 4.4.5 – Standard U-factors for Metal-Framed Floors without a Crawl Space	Floor, Light
Table 4.4.6 – Standard U-factors for Concrete Raised Floors	Floor, Mass
Table 4.5.1 – Opaque Doors	Wall, Light

Window Area Limits for the Standard Design

The gross wall area of the standard design is the same as the corresponding component of the proposed design. However, it may be necessary to reduce the window area of the standard design and increase the opaque wall area of the standard design when the window-wall-ratio of the proposed design (WWR_{prop}) is more than the prescriptive limit. This is accomplished by the following procedures:

Adjust Total Window Area

Step 1 Calculate the maximum allowed total window area ($A_{WndwTotal,sd}$) for the standard design. This is the greater of 6 ft times the display perimeter or 40% of the gross wall area.

Step 2 Calculate the maximum allowed window-wall-ratio ($WWR_{Total,sd}$) for the standard design by dividing the maximum allowed window area ($A_{WndwTotal,sd}$) determined in the previous step by the gross wall exterior area.

Step 3 Calculate the proposed window-wall-ratio ($WWR_{Total,\ pd}$) by dividing the proposed total window area by the gross exterior wall area.

Step 4 If $WWR_{Total,pd}$ is less than or equal to $WWR_{Total,sd}$, then set the window area of the standard design equal to the window area of the proposed design. If $WWR_{Total,pd}$ is greater than $WWR_{Total,sd}$, then the area of each window in the standard design shall be reduced from the proposed design by multiplying each window area by the ratio of $WWR_{Total,sd}$ / $WWR_{Total,pd}$.

Adjust West Window Area

After adjusting the total window area (if necessary), a separate test shall be made for the west facing windows.

Step 1 Calculate the maximum allowed window area ($A_{WndwWest,sd}$) for the standard design on the west facades. This is the greater of 6 ft times the display perimeter of the west facades or 40% of the west-facing gross wall area.

Step 2 Calculate the maximum allowed window-wall-ratio ($WWR_{West,sd}$) for the standard design on the west façade by dividing the maximum allowed window area ($A_{West,sd}$) determined in the previous step by the west facing gross exterior wall area.

Step 3 Calculate the proposed adjusted window-wall-ratio ($WWR_{West,pd}$) by dividing the standard design west facing window area determined in the total window area adjustments by the west-facing gross exterior wall area.

Step 4 If $WWR_{West,pd}$ is less than or equal to $WWR_{West,sd}$, then no additional adjustments are made to west facing windows. If $WWR_{West,pd}$ is greater than $WWR_{West,sd}$, then the area of each west facing window in the standard design shall be further reduced by multiplying each west facing adjusted window area by the ratio of $WWR_{West,sd}$ / $WWR_{West,pd}$.

Skylight Area Limits for the Standard Design

The gross roof area of the standard design is the same as the proposed design. However, it may be necessary to reduce the skylight area of the standard design and increase the opaque roof area of the standard design when the skylight-roof-ratio of the proposed design (SRR_{prop}) is more than the prescriptive maximum allowed. This is accomplished by the following procedure:

Step 1 Calculate the maximum allowed skylight area ($A_{Skyl,sd}$) for the standard design. This is the sum of 10% of the roof area over atria and 5% of other roof areas.

Step 2 Calculate the maximum allowed skylight-roof-ratio (SRR_{sd}) for the standard design by dividing the maximum allowed skylight area ($A_{Skyl,sd}$) determined in the previous step by the gross exterior roof area.

Step 3 Calculate the proposed skylight-roof-ratio (SRR_{pd}) by dividing the proposed design skylight area by the gross exterior roof area.

Step 4 If SSR_{pd} is less than or equal to SSR_{sd}, then no adjustments are made to skylight area of the standard design. If SSR_{pd} is greater than SSR_{sd}, then the area of each skylight in the standard design shall be reduced by multiplying the area of each skylight by ratio of SRR_{sd} / SRR_{pd}.

NA5.3 TDV Energy of the Proposed Design

Equation NA5-2 shall be used to calculate the TDV energy of the proposed design. The proposed design equation includes two multipliers for cool roofs and overhangs that are explained in subsequent sections.

Equation NA5-2

$$TDV_{prop} = \sum_{i=1}^{nW} c_{Wu,i} \times \left(A_{W,i} \times U_{W,i}^{Prop}\right) + \sum_{i=1}^{nG} A_{G,i} \times \left[\left(c_{Gu,i} \times U_{G,i}^{Prop}\right) + \left(c_{Gs,i} \times SHGC_{G,i}^{Prop} \times M_{OH,i}\right) + \left(c_{Gt,i} \times VLT_{G,i}^{Prop}\right)\right]$$
$$+ \sum_{i=1}^{nR} c_{Ru,i} \times \left(A_{R,i} \times U_{W,i}^{Prop} \times M_{CR,i}\right) + \sum_{i=1}^{nS} A_{S,i} \times \left[\left(c_{Su,i} \times U_{S,i}^{Prop}\right) + \left(c_{Ss},i \times SHGC_{S,i}^{Prop}\right) + \left(c_{St},i \times VLT_{S,i}^{Prop}\right)\right]$$
$$+ \sum_{i=1}^{nF} c_{Fu,i} \times \left(A_{F,i} \times U_{W,i}^{Prop}\right) + \sum_{i=1}^{nD} c_{W} \times \left(A_{D,i} \times U_{D,i}^{Prop}\right)$$

Where:

TDV_{prop}	=	TDV energy of the proposed design, for space cooling and heating only.
W,F,R,G,S,D	=	Index for the building envelope component type (wall, floor, roof, window, skylight, door)
i	=	Index for each unique occupancy type, orientation, and coefficient category.
nW, nF, nR, nG, nS, nD	=	Number of components of the applicable envelope feature of the proposed design (wall, floor, roof, window, skylight, door).
$A_{W,i}, A_{F,i}, A_{R,i}$ $A_{G,i}, A_{S,i}, A_{D,i}$	=	Exterior surface area of each building envelope component (in ft²) of the proposed building. The index "i" shall indicate each unique combination of construction class and orientation (when appropriate).
$U_{W,i}^{Prop}, U_{F,i}^{Prop}, U_{R,i}^{Prop}$ $U_{G,i}^{Prop}, U_{S,i}^{Prop}, U_{D,i}^{Prop}$	=	The proposed design U-factor in Btu/h- ft²-°F for the wall , floor, roof, window, skylight and door component indicated by index i.
$SHGC_{G,i}^{Prop}, SHGC_{S,i}^{Prop}$	=	The solar heat gain coefficient of windows and skylights based on NFRC ratings or CEC defaults.
$VLT_{G,i}^{Prop}, VLT_{S,i}^{Prop}$	=	The window visible light transmittance of windows and skylights from NFRC data or 1.2 times CEC defaults for SHGC.
$SHGC_{G,i}^{Prop}$	=	The solar heat gain coefficient for the window of the proposed building corresponding to index i. Note that overhangs are treated by the overhang multiplier, $M_{OH,i}$.
$SHGC_{S,i}^{Prop}$	=	The skylight SHGC for the corresponding A_S.
$VLT_{G,i}^{Prop}$	=	The window visible light transmittance for the corresponding A_G. The VLT for the standard design shall be calculated as 1.2 x $SHGC_{G,std}$.
$VLT_{S,i}^{Prop}$	=	The skylight visible light transmittance for the corresponding A_S. The VLT for the standard design shall be calculated as 1.2 x $SHGC_{S,std}$.
$c_{Wu,i}$, $c_{Fu,i}$, $c_{Ru,i}$, $c_{Gu,i}$, $c_{Su,i}$	=	U-factor coefficient for the wall, floor, roof, windows, skylights and doors, respectively. Coefficients match those used in the standard design.
$c_{Gs,i}$, $c_{Ss,i}$	=	Solar heat gain weighting coefficients for the windows and skylights, respectively.
$c_{Gt,i}$, $c_{St,i}$	=	Visible light transmittance coefficients for the windows and skylights,

		respectively.
$M_{CR,i}$	=	Cool roof multiplier, as defined below.
$M_{OH,i}$	=	Overhang multiplier as defined below.

Cool Roof Multiplier (M_{CR})

The cool roof multiplier is an adjustment to the roof component of TDV energy. It is calculated from the following equation:

Equation NA5-3

$$M_{CR,i} = 1 + c_{Ref} \times (\rho_{aged,prop} - \rho_{aged,std}) + c_{Emit} \times (\varepsilon_{prop} - \varepsilon_{std})$$

Where: .

$M_{CR,i}$	=	A multiplier that accounts for differences between the prescriptive cool roof requirement and the reflectance and emittance of the proposed design.
C_{Ref}	=	Coefficient for the reflectance of the roof. This depends on occupancy type and climate zone. The coefficients are listed in Tables NA5-3, NA5-4, and NA5-5.
C_{Emit}	=	Coefficient for the emittance of the roof. This depends on occupancy type and climate zone. The coefficients are listed in Tables NA5-3, NA5-4, and NA5-5.
$\rho_{aged,prop}$	=	Proposed aged design reflectance of the roof outside surface. This data is from the three-year aged reflectance from CRRC. If aged reflectance is not available from CRRC, then an estimate of the aged reflectance shall be used based on the CRRC initial reflectance. Use the following equation to estimate the aged reflectance: $\rho_{aged,prop} = 0.7 \times (\rho_{init,prop} + 0.06)$ If neither initial or aged reflectance data is available from CRRC for the proposed roof, then a default aged reflectance of 0.1 shall be used.
$\rho_{aged,std}$	=	Standard design aged solar reflectance, as required by the prescriptive requirements of §143(a) of the Standards and summarized in Table NA5-2.
ε_{prop}	=	Proposed design thermal emittance of the roof outside surface from CRRC data. If CRRC data is not available, then a default value of 0.75 shall be used.
ε_{std}	=	Thermal emittance of the roof outside surface of the standard design, as defined in Table NA5-2~~1~~

Table NA5-2 – Standard design values for solar reflectance and thermal emittance

	Aged Solar Reflectance	Thermal Emittance
Low-Rise, Low-Sloped, CZ2 through CZ15	0.55	0.75
Low-Rise, Low-Sloped, CZ1 and CZ16	0.1	0.75
High-Rise, Low Sloped, CZ10 through CZ15	0.55	0.75
High-Rise, Low Sloped, CZ1-9 and CZ16	0.1	0.75
Steep-sloped, CZ2 through CZ15	0.25	0.75
Steep-sloped, all other	0.1	0.75

Overhang Multiplier (M_{OH})

The solar gains component of window TDV energy is adjusted when overhangs provide shading. The size and configuration of the overhang is approximated by a projection factor (PF), which is defined below.

Equation NA5-4

$$M_{OH,i} = 1 + a_i \times PF_i + b_i \times PF_i^2$$

where

a_i	=	First coefficient for the projection factor. Varies by orientation and climate
b_i	=	Second coefficient for the projection factor. Varies by orientation and climate.
PF_i	=	Projection Factor. $PF = \frac{H}{V}$.
H	=	Horizontal projection of the overhang from the surface of the window in feet, but no greater than V
V	=	Vertical distance from the window sill to the bottom of the overhang, in feet.

NA5.4 Coefficients

Table NA5-3 – Nonresidential Coefficients

Coefficient	1	2	3	4	5	6	7	8	9	10	11	12	13	14	15	16
c_F (light)	73.39	98.24	43.41	55.58	47.25	9.71	13.89	25.69	45.16	65.72	104.71	90.66	89.40	120.37	118.03	161.72
c_F (mass)	54.09	50.23	10.68	10.90	9.60	0.00	0.00	0.00	0.00	16.73	57.42	40.41	44.74	69.08	65.81	125.78
a (east)	-0.67	-0.73	-0.72	-0.77	-0.77	-0.78	-0.78	-0.77	-0.73	-0.76	-0.68	-0.71	-0.73	-0.71	-0.72	-0.63
b (east)	0.52	0.29	0.32	0.31	0.33	0.32	0.32	0.29	0.27	0.30	0.29	0.29	0.31	0.28	0.30	0.27
a (north)	-0.29	-0.32	-0.31	-0.34	-0.32	-0.42	-0.43	-0.39	-0.36	-0.38	-0.25	-0.26	-0.28	-0.28	-0.31	-0.17
b (north)	0.12	0.15	0.15	0.16	0.14	0.20	0.21	0.19	0.16	0.18	0.12	0.13	0.14	0.14	0.14	0.09
a (south)	-1.53	-0.98	-1.17	-1.09	-1.15	-1.04	-0.98	-0.77	-0.87	-1.00	-1.08	-1.02	-1.15	-0.98	-1.00	-1.14
b (south)	1.16	0.53	0.68	0.62	0.61	0.56	-0.04	0.38	0.41	0.46	0.62	0.57	0.67	0.54	0.43	0.71
a (west)	-0.70	-0.73	-0.76	-0.70	-0.73	-0.77	-0.78	-0.70	-0.74	-0.69	-0.65	-0.68	-0.70	-0.68	-0.71	-0.66
b (west)	0.30	0.27	0.29	0.23	0.30	0.30	0.32	0.32	0.30	0.26	0.22	0.24	0.24	0.24	0.05	0.22
c_R (attic)	116.49	181.54	115.85	140.76	114.81	90.71	94.64	117.99	131.00	156.42	180.36	173.69	171.47	207.36	191.53	224.18
c_R (light)	100.03	172.08	101.52	134.56	105.40	83.90	94.40	113.67	127.80	155.30	163.51	159.38	158.48	191.36	187.17	198.47
c_R (mass)	82.85	82.19	56.84	58.34	45.13	24.18	32.67	40.21	37.33	56.14	100.03	89.76	91.75	113.76	96.06	142.00
c_{Emit}	0.02	-0.31	-0.28	-0.43	-0.38	0.19	-0.93	-0.96	-0.84	-0.78	-0.46	-0.42	-0.66	-0.48	-0.90	-0.18
c_{Ref}	-0.60	-1.29	-1.50	-1.81	-1.74	-2.16	-3.27	-2.89	-2.52	-2.30	-1.70	-1.68	-2.07	-1.69	-2.54	-0.95
c_{Ss}	190.85	683.06	514.21	742.41	428.13	773.32	1022.94	912.55	881.51	908.10	888.35	852.55	947.90	942.23	1871.93	605.53
c_{St}	-5.87	-0.17	18.68	26.57	78.44	29.42	68.03	13.06	14.79	3.46	21.96	23.90	8.57	20.69	-198.51	-11.00
c_{Su}	34.67	32.96	7.38	10.35	15.98	0.00	0.00	0.00	0.00	0.00	38.87	33.85	18.62	44.70	-81.19	91.84
c_W (heavy mass)	46.28	33.04	18.60	15.07	2.80	0.00	0.00	5.54	4.30	18.44	68.89	51.09	58.69	66.67	76.15	98.43
c_W (light)	72.49	135.26	79.89	105.29	87.01	69.49	75.52	104.30	119.13	142.74	153.46	137.84	148.52	169.93	201.13	164.16
c_W (medium mass)	58.27	58.05	35.10	35.11	18.39	8.10	11.97	25.05	29.00	44.35	92.08	74.85	81.20	97.68	105.31	122.08
c_{Gs} (east)	50.79	256.16	170.33	293.91	238.39	297.25	279.82	367.47	376.81	411.91	378.11	356.38	418.51	431.91	666.01	220.11
c_{Gt} (east)	-5.10	-18.76	2.55	-11.89	-1.11	7.68	5.40	-7.11	-6.51	-24.04	-10.30	-9.85	-16.06	-21.54	-28.86	-18.99
c_{Gu} (east)	27.93	30.86	16.35	15.65	12.73	0.00	1.81	5.25	11.32	20.26	43.74	31.60	30.33	48.65	40.08	69.96
c_{Gs} (north)	60.86	131.95	94.93	147.24	115.89	138.86	151.32	173.12	183.41	207.77	188.48	172.21	194.08	206.89	303.70	137.30
c_{Gt} (north)	-8.69	-12.18	-3.30	-6.61	-6.33	4.05	0.67	-2.47	-6.51	-22.40	-16.83	-14.82	-15.45	-14.30	-20.19	-28.12
c_{Gu} (north)	30.51	47.12	20.83	18.33	16.50	0.00	4.97	9.87	19.34	20.02	53.06	43.82	42.90	62.07	54.49	81.90
c_{Gs} (south)	69.67	312.07	203.98	313.44	319.53	319.30	-20.69	367.01	493.59	520.67	406.32	356.94	403.75	395.22	586.58	247.63
c_{Gt} (south)	-5.14	-23.27	6.31	-6.32	3.85	12.57	127.19	4.61	-8.79	-30.06	-12.54	-8.10	-19.63	-26.04	-33.07	-21.99
c_{Gu} (south)	32.54	44.30	26.07	28.81	23.64	1.72	60.43	32.56	18.35	24.03	57.44	48.62	45.22	56.49	32.84	81.45
c_{Gs} (west)	85.68	340.91	206.01	364.57	239.59	340.91	348.89	483.20	468.46	492.09	555.65	473.69	544.08	560.24	713.09	292.21
c_{Gt} (west)	-7.74	-18.68	8.34	-3.20	-3.62	9.81	1.89	-10.69	-11.13	-30.03	-57.41	-17.47	-27.51	-32.01	-30.12	-33.80
c_{Gu} (west)	29.06	41.19	20.45	20.48	13.65	0.00	2.92	4.01	16.78	19.85	50.45	40.90	39.45	59.06	51.41	81.01

Table NA5-4 – 24-Hour Coefficients

Coefficient	1	2	3	4	5	6	7	8	9	10	11	12	13	14	15	16
c_F (light)	271.87	242.47	195.46	175.15	192.00	111.38	90.07	111.94	124.22	153.72	225.65	212.82	195.34	247.84	193.39	346.76
c_F (mass)	265.55	190.18	176.41	130.67	161.91	94.94	72.35	77.35	77.35	109.94	183.94	161.28	157.65	203.10	131.40	296.44
a (east)	-0.90	-0.45	-2.33	-0.62	-0.61	-1.26	-0.73	-0.74	-0.68	-0.68	-0.51	-0.54	-0.59	-0.61	-0.67	0.33
b (east)	0.25	0.36	0.77	0.39	1.58	0.85	0.39	0.35	0.29	0.29	0.21	0.26	0.22	0.26	0.27	0.12
a (north)	-1.55	-0.06	1.61	-0.15	0.52	-0.17	-0.34	-0.31	-0.31	-0.31	-0.13	-0.14	-0.17	-0.19	-0.28	0.11
b (north)	0.70	0.04	-0.72	0.08	-0.18	0.09	0.17	0.15	0.15	0.15	0.07	0.08	0.09	0.10	0.13	-0.03
a (south)	-0.96	-1.14	-2.18	-1.31	-1.49	-0.84	6.68	-0.74	-0.94	-1.07	-1.04	-0.92	-1.07	-0.96	-0.77	-1.51
b (south)	0.20	0.91	7.87	0.95	1.49	0.71	-4.08	0.25	0.54	0.57	0.65	0.62	0.64	0.61	0.33	1.66
a (west)	-0.88	-0.70	-0.73	-0.91	0.12	-0.43	-0.80	-0.46	-0.72	-0.59	-0.70	-0.65	-0.65	-0.63	-0.44	-0.51
b (west)	0.15	0.48	1.51	0.54	1.91	0.22	0.35	0.12	0.27	0.20	0.22	0.21	0.24	0.24	0.03	0.31
c_R (attic)	218.71	267.29	191.99	215.08	181.95	140.70	132.27	163.28	175.64	217.56	270.93	258.22	246.21	300.35	256.90	345.32
c_R (light)	241.17	315.45	218.07	257.77	222.35	181.96	171.95	199.83	213.39	263.87	288.29	286.43	268.75	324.85	282.17	371.78
c_R (mass)	213.10	190.51	167.97	153.94	148.23	113.99	96.47	109.89	107.07	134.27	205.92	186.46	184.10	229.38	175.33	287.74
c_{Emit}	0.52	0.15	0.29	0.01	0.27	0.15	-0.10	-0.20	-0.27	-0.26	-0.11	-0.04	-0.17	-0.05	-0.61	0.10
c_{Ref}	0.95	-0.12	0.28	-0.54	0.20	-0.50	-1.24	-1.15	-1.13	-1.04	-0.67	-0.56	-0.84	-0.56	-1.38	-0.07
c_{Ss}	-511.67	289.49	32.51	562.51	91.92	-5.02	555.73	818.12	800.55	761.50	734.20	687.40	801.77	771.69	819.20	252.00
c_{St}	-51.54	-29.37	-39.75	12.83	-60.27	162.57	7.51	-40.07	11.11	-4.27	7.76	-2.23	-8.10	-10.96	214.91	-47.41
CSU	166.28	117.60	105.42	64.12	92.03	117.35	31.65	21.47	42.05	67.76	122.26	110.92	86.08	115.49	111.68	207.95
c_W (heavy mass)	144.37	85.71	89.78	66.34	60.49	40.67	42.95	32.17	37.51	58.24	138.33	102.57	118.12	131.67	137.53	196.09
c_W (light)	170.52	215.98	160.68	182.30	162.30	125.38	122.18	155.91	171.92	217.44	253.22	227.71	232.08	269.21	284.47	300.86
c_W (medium mass)	158.57	111.64	108.56	89.88	79.05	55.77	44.86	54.81	63.88	90.76	164.42	133.55	146.34	165.76	163.64	220.44
c_{Gs} (east)	-220.04	106.38	-44.31	146.32	26.74	145.21	181.28	267.11	312.11	371.67	287.84	232.53	357.10	349.93	752.41	62.81
c_{Gt} (east)	-33.13	-23.20	-25.04	-17.18	-24.28	-9.63	-8.40	-17.30	-13.55	-32.71	-23.27	-21.58	-27.25	-34.44	-41.35	-38.95
c_{Gu} (east)	123.09	94.63	88.88	75.43	79.35	50.86	38.34	47.45	49.60	61.28	107.09	97.42	83.16	103.58	76.27	167.89
c_{Gs} (north)	-58.35	97.29	20.14	108.58	22.48	65.25	106.49	140.11	167.07	193.30	180.33	149.43	188.07	194.13	335.65	116.98
c_{Gt} (north)	-42.93	-38.97	-34.72	-26.94	-33.55	-17.04	-13.36	-19.23	-19.71	-26.90	-33.99	-32.02	-30.64	-38.94	-37.50	-52.47
c_{Gu} (north)	115.96	96.83	93.03	76.91	85.01	54.01	42.62	51.95	57.11	70.12	112.00	101.93	93.13	116.61	89.97	169.17
c_{Gs} (south)	-224.68	171.07	10.18	207.71	88.05	162.72	-21.62	264.42	526.65	436.65	351.29	323.50	362.71	381.46	871.10	94.34
c_{Gt} (south)	-26.79	-26.68	-31.56	-15.73	-34.75	-7.91	69.33	-7.61	-56.84	-34.25	-24.43	-47.00	1.76	-39.62	-62.58	-47.18
c_{Gu} (south)	116.16	98.97	84.66	74.36	72.95	43.88	60.50	70.26	33.01	57.95	115.89	102.94	110.86	105.67	72.92	169.10
c_{Gs} (west)	-218.97	201.76	23.54	242.73	9.66	165.34	258.32	359.99	424.09	461.66	403.63	379.28	514.35	541.92	1259.14	146.50
c_{Gt} (west)	-30.33	-39.35	-36.99	-22.89	-35.94	-30.52	-13.15	-20.92	-24.36	-43.40	-27.87	-34.29	-38.40	-48.38	-213.11	-57.34
c_{Gu} (west)	120.45	87.80	81.97	63.44	79.44	36.04	34.27	42.83	51.84	57.71	115.34	95.23	86.55	105.27	29.63	166.61

Table NA5-5 – Retail Coefficients

Coefficient	1	2	3	4	5	6	7	8	9	10	11	12	13	14	15	16
c_F (light)	11.80	59.12	0.00	10.77	0.00	0.00	0.00	0.00	5.02	31.07	84.21	63.89	70.65	111.25	110.58	141.89
c_F (mass)	0.00	13.55	0.00	0.00	0.00	0.00	0.00	0.00	0.00	0.00	23.95	11.69	13.62	43.83	51.70	86.00
a (east)	0.26	-2.16	-1.45	-2.11	-1.93	-1.74	-2.05	-2.09	-2.04	-2.07	-1.85	-2.10	-2.08	-2.21	-1.92	-1.96
b (east)	-0.25	1.05	0.71	0.99	0.89	0.74	1.05	1.00	0.99	1.00	0.83	1.00	0.96	1.00	0.91	0.87
a (north)	-1.19	-0.80	-1.01	-0.85	-1.06	-1.18	-1.05	-0.99	-0.94	-0.80	-0.63	-0.71	-0.68	-0.61	-0.72	-0.55
b (north)	0.61	0.42	0.53	0.45	0.55	0.62	0.56	0.52	0.49	0.42	0.33	0.38	0.36	0.33	0.38	0.29
a (south)	-5.20	-2.36	-2.97	-2.89	-3.01	-6.24	-2.58	-3.41	-2.31	-2.29	-2.66	-2.82	-2.80	-2.68	-2.13	-2.93
b (south)	4.45	1.25	1.88	1.75	1.74	3.93	1.49	1.37	1.22	1.13	1.56	1.64	1.61	1.57	1.04	1.79
a (west)	-2.44	-1.99	-2.03	-2.43	-2.02	-2.08	-2.10	-2.04	-1.92	-1.83	-1.94	-1.92	-2.23	-1.84	-1.85	-1.92
b (west)	1.36	0.84	0.78	1.03	0.91	4.24	0.94	0.90	0.82	0.82	0.74	0.76	1.23	0.68	0.75	0.77
c_R (attic)	107.40	194.26	108.65	145.19	100.00	70.90	87.23	116.13	137.90	167.33	201.41	186.53	192.12	235.28	219.81	250.01
c_R (light)	97.08	183.93	95.29	136.06	97.49	68.50	85.56	105.29	128.79	163.37	186.48	174.28	184.93	220.37	222.20	232.47
c_R (mass)	79.98	88.20	51.61	55.17	34.46	22.46	25.96	34.02	34.53	62.04	118.96	100.45	108.40	135.66	114.01	179.76
c_{Emit}	-0.20	-0.57	-0.55	-0.74	-0.81	-1.59	-1.05	-1.33	-1.12	-1.02	-0.64	-0.61	-0.81	-0.72	-1.00	-0.30
c_{Ref}	-0.80	-1.68	-2.08	-2.38	-2.32	-4.76	-4.05	-4.05	-3.07	-2.77	-1.93	-1.96	-2.33	-2.01	-2.48	-1.12
c_{Ss}	213.31	800.49	636.93	918.22	614.03	742.37	833.45	946.54	1011.98	1091.94	1073.16	1030.57	1207.88	1220.95	1570.86	731.66
c_{St}	11.13	13.34	6.66	50.68	34.66	57.09	50.78	118.53	46.93	20.76	41.11	39.97	-6.88	20.47	35.88	3.72
c_{Su}	-2.74	-8.65	-45.50	-39.87	-43.21	-61.17	-53.11	-30.92	-48.37	-36.13	-6.87	-19.28	-14.98	3.50	-27.31	45.99
c_W (heavy mass)	52.21	58.17	24.77	32.82	7.66	5.65	5.26	20.84	28.92	49.67	105.90	78.83	93.48	107.52	137.00	145.05
c_W (light)	73.60	159.34	76.79	117.60	90.20	60.81	60.42	112.38	136.11	172.29	192.53	166.40	189.65	213.97	253.96	202.87
c_W (medium mass)	59.37	86.25	39.15	54.95	22.71	16.45	21.76	45.19	56.46	81.75	131.91	104.67	122.30	144.65	167.49	167.59
c_{Gs} (east)	7.14	112.23	52.93	114.81	87.55	91.43	100.54	133.72	150.73	172.34	169.07	149.60	176.99	183.08	270.91	96.01
c_{Gt} (east)	3.22	-0.19	7.84	3.51	6.03	8.54	5.94	4.58	2.69	-2.66	0.19	1.73	-0.96	-4.94	-2.97	-1.17
c_{Gu} (east)	-1.16	7.49	-2.34	0.54	-2.30	-9.12	-5.98	-3.18	-1.14	4.92	12.23	7.69	9.73	14.15	18.73	19.62
c_{Gs} (north)	18.27	56.92	32.76	56.77	38.01	48.14	53.60	64.88	70.31	93.08	74.60	68.90	78.51	83.72	123.50	55.37
c_{Gt} (north)	2.87	-1.81	3.72	2.86	4.00	5.95	4.58	3.11	2.09	-5.58	-1.79	-1.19	-2.06	-3.98	-5.01	-5.02
c_{Gu} (north)	-0.40	7.05	-3.92	0.20	-4.08	-10.79	-7.25	-4.60	-0.69	4.12	13.70	9.42	11.30	16.60	17.76	22.70
c_{Gs} (south)	19.93	140.61	79.21	131.38	107.71	47.15	122.23	-105.32	197.44	219.92	186.54	163.26	182.41	183.11	311.65	115.11
c_{Gt} (south)	6.09	-1.66	8.42	4.80	6.56	40.94	7.58	102.93	4.77	-0.88	2.85	3.10	-1.13	-2.91	-7.90	-2.02
c_{Gu} (south)	1.91	10.61	-0.13	4.97	0.23	0.98	-3.24	42.55	2.83	7.53	18.99	13.23	14.80	20.02	17.55	24.93
c_{Gs} (west)	32.06	152.29	96.82	126.76	94.79	108.39	139.66	179.00	195.99	210.12	220.24	201.58	196.28	251.91	297.46	132.57
c_{Gt} (west)	4.20	-4.54	-0.42	15.93	2.83	-16.53	6.50	8.35	0.01	-1.33	-6.87	-1.22	-2.66	-7.14	-6.94	-7.95
c_{Gu} (west)	0.39	8.29	0.20	5.88	-4.68	-1.62	-5.85	-1.20	1.04	6.05	15.01	10.88	20.55	18.90	21.34	23.88

Nonresidential Appendix NA6 – 2008

Appendix NA6 – Alternate Default Fenestration Procedure to Calculate Thermal Performance

NA6.1 Scope

This appendix ~~applies to~~provides default a procedure for determining fenestration thermal performance for skylights and site built fenestration less than 10,000 ft² in area, as excepted from Section 116 (a) 2 and Section 116 (a) 3 of the Standard. For fenestration not excepted, Table 116-A and Table 116-B in the Standards shall be used.

> ~~"**EXCEPTION to Section 116 (a)**: If the fenestration product is site-built fenestration in a building covered by the nonresidential standards with less than 10,000 square feet of site-built fenestration or is a skylight, the default may be the applicable U-factor as set forth in the Nonresidential ACM Manual."~~
>
> ~~"***EXCEPTION to Section 116 (a) 3:*** *If the fenestration product is site-built fenestration in a building covered by the nonresidential standards with less than 10,000 square feet of site-built fenestration or is a skylight, the default SHGC may be calculated according to Equation 116-A.*"

~~**Purpose**~~

~~To present alternate default U-factors and the calculation method for determining an alternate default SHGC, and to describe the responsibilities of energy consultants, designers, architects, builders, installers, and building departments when an alternate default value is used for determining compliance.~~

NA6.2 Default U-factor

The default U-factor shall be determined using the following equation.

Equation NA6-1 $$U_T = C_1 + C_2 \times U_C$$

where

U_T The fenestration product U-factor

C_1 coefficient selected from Table NA-1

C_2 coefficient selected from Table NA-1

U_C center of glass U-factor

Table NA-1 –U-factor Coefficients

Product	Frame Type	C_1	C_2
Site-Built Vertical Fenestration	Metal Frame	0.311	0.872
	Thermal Break Frame	0.202	0.867
	Non-Metalic Frame	0.202	0.867
Skylights with a Curb	Metal Frame	0.711	1.065
	Thermal Break Frame	0.437	1.229
	Non-Metalic Frame	0.437	1.229
Skylights with no Curb	Metal Frame	0.195	0.882
	Thermal Break Frame	0.310	0.878
	Non-Metalic Frame	0.310	0.878

~~*NI.1 Solar Heat Gain Coefficient*~~

~~This section describes the alternative calculation method for determining compliance for eligible site-built products. The following equation may be used to calculate the fenestration product's SHGC used to determine compliance. Convert theSHGC, $SHGC_c$, from the manufacturer's documentation to a value for the fenestration product with framing, $SHGC_{fen}$~~

~~$SHGC_{fen} = 0.08 + 0.86 X SHGC_c$~~

~~Where:~~

~~$SHGC_{fen}$ is the SHGC for the fenestration including glass and frame~~

~~$SHGC_c$ is the SHGC for the center of the glass alone, and~~

NA6.3 Default Solar Heat Gain Coefficient

The SHGC of the fenestration product shall be calculated using the following equation:

Equation NA6-1 $$SHGC_T = 0.08 + 0.86 \times SHGC_C$$

where

$SHGC_T$ the SHGC for the fenestration including glass and frame.

$SHGC_C$ the SHGC for the center of glass alone.

~~*NI.1.2*~~*NA6.4 Responsibilities for ~~SHGC~~ Compliance*

This section describes the responsibilities of energy consultants, designers, architects, builders, installers, and ~~building departments~~enforcement agencies when using the procedures of this ~~alternative calculation method is used for determining compliance with SHGC requirements~~appendix.

~~NI.1.2~~NA6.4.1 Energy Consultants, Designers, Architects

~~*Site-Built Fenestration Products without SHGC Rated Using NFRC Procedures*~~

~~The procedure described below applies only to skylights and to site-built fenestration in buildings with less than 10,000 ft^2 of site-built fenestration.~~

~~To determine compliance with the efficiency standards, the center of glass SHGC from the manufacturer's documentation for the proposed glazing must be converted to an $SHGC_{fen}$ for the fenestration that includes the framing effect.~~The person with responsibility for preparing the compliance documentation shall establish the inputs to the procedure according to the following:

- The center of glass U-factor and SHGC shall be taken from manufacturers' literature and determined using methods consistent with to NFRC standards.
- The frame type (thermal break, non-metalic or metal) shall be verified from manufacturers' literature and through observations of frame sections provided by the manufacturer.

For the ~~Prescriptive~~ prescriptive compliance method, the ~~$SHGC_{fen}$ is then~~U_T, $SHGC_T$ U_C and $SHGC_C$ determined through this procedure shall be entered ~~into~~on the prescriptive ENV-1-C form, Part 2 of 2~~ and must appear on the building plans~~.

~~For the Performance compliance method, the $SHGC_{fen}$ output information printed on the Performance ENV-1 form must be listed on the building plans. The~~ For the performance compliance method, the U_T, $SHGC_T$ U_C and $SHGC_C$ determined through this procedure shall be documented on the PERF-1 and Performance ENV-1-C forms~~ must appear on~~.

For both the ~~plans. The~~ prescriptive and performance compliance method, the building ~~plan~~plans shall contain a window schedule ~~list must indicate the proposed total $SHGC_{fen}$ values for each fenestration assembly, and these values must be equal to~~that lists the ~~SHGCs listed on~~U_T and $SHGC_T$ determined through this procedure and the ~~Performance ENV-1 computer form. (Note: an under-calculation~~specifications of ~~space conditioning energy can result from entering either too low or too high an $SHGC_{fen}$ for~~ the windows shall be consistent with the values used in this procedure, e.g. frame type glazing product~~.)~~, etc.

Permit applications must include ~~heat gain~~fenestration U-factor documentation for the ~~Building Plan Checker.~~building plan checker. This documentation must include a copy of the manufacturer's documentation showing the ~~$SHGC_c$,~~ Glazing Type information (center of glass ~~alone~~U-factor, number of panes, and coatings) and the ~~calculation~~frame type (frame material type, presence of thermal breaks, and identification of structural glazing (glazing with no frame)) that is used to determine ~~the $SHGC_{fen}$.~~ U_T and $SHGC_T$. If the proposed design uses multiple fenestration products~~ or site-assembled fenestration products, a calculation for each different $SHGC_{fen}$ must~~, manufacturer's documentation for each fenestration product shall be attached to the plans~~ along with each glass unit manufacturer's documentation.~~. Manufacturer's documentation must be provided for each unique combination of glazing and frame used for compliance.

~~Building plans shall identify all site-built fenestration and all site-built fenestration without SHGCs rated using NFRC procedures.~~

~~*Mixed Fenestration Types*~~

If mixed fenestration is included in the compliance analysis, then the compliance submittal must ~~demonstrate~~show which are certified fenestration products, and which are non-certified fenestration ~~or site-built fenestration products.~~ products (site-built less than 10,000 ft² or skylights). The manufacturer's documentation and calculations for each product must be included in the submittal, and either the ENV-1-C or PERF-1 form must be included on the building plans.

~~NI.1.2~~NA6.4.2 Builder and Installer Responsibilities

The builder ~~is responsible for ensuring~~must ensure that the fenestration (glass and frame) documentation showing the ~~SHGC~~U-factor used for determining compliance is provided to the installer. The builder is responsible for ~~obtaining an NFRC Label Certificate for Site-Built Products for the building's site-built fenestration if the building has 10,000 ft^2 or more of site-built fenestration.~~

~~The builder is also responsible for~~ ensuring that the persons preparing compliance documentation are specifying products ~~that~~ the builder intends to install.~~ The builder must ensure that the glazing contractor installs the glass with the same $SHGC_c$ as used for compliance and that the building inspector is provided with manufacturers' documentation showing the $SHGC_c$ for the actual glass product installed.~~ The builder is responsible for ensuring that the installer installs glass with thermal performance equal to or better than the thermal performance used for compliance and that the frame type installed is the same as that used for

compliance. The builder also must ensure that the field inspector for the enforcement agency is provided with manufacturer's documentation showing the thermal performance and method of determining thermal performance for the actual fenestration products installed. The builder should verify that these fenestration products are clearly shown on the building plans before fenestration products are purchased and installed.

~~NI.1.2.3 Building Department~~NA6.4.3 Enforcement Agency Responsibilities

Plan Checker

The ~~building department~~enforcement agency plan checker is responsible for ensuring that the plans identify all skylights and site-built fenestration.

The plan~~-~~ checker ~~is responsible for verifying~~shall ensure that for skylights and site-built fenestration using ~~the~~ alternate default ~~SHGC calculation:~~thermal performance determined through this procedure, that:

1. ~~the $SHGC_{fen}$,~~ U-factors and ~~$SHGC_e$~~SHGC values are ~~identified~~shown on the window schedules on the plans,
2. ~~calculations have been provided showing the conversion from $SHGC_e$ to $SHGC_{fen}$,~~ the Glazing Type and Frame Type and which are the basis of this procedure are properly documented,
3. manufacturer documentation of the ~~$SHGC_e$~~Glazing Type and Frame Type has been provided for the each of the fenestration products using ~~alternate default SHGC calculations, and~~the procedure of this appendix, and
4. the building has less than 10,000 ft^2 of site-built fenestration.

Plans should be consistent with the compliance documentation~~, the calculations showing the conversion from $SHGC_e$ to $SHGC_{fen}$, and Prescriptive ENV-1 Part 2 of 2 or Performance ENV-1~~.

Building Inspector

The ~~building department~~enforcement agency field inspector is responsible for ensuring that the building using ~~an alternate default SHGC calculation~~the procedure in this appendix has less than 10,000 ft^2 of site-built fenestration.

The enforcement agency field inspector is responsible for ensuring that manufacturer's documentation has been provided for the ~~$SHGC_e$ and $SHGC_{fen}$~~-installed fenestration. The field inspector is responsible for ensuring that the U-factor for the installed fenestration is consistent with the plans, the Prescriptive ENV-1-C Part 2 of 2 or the Performance PERF-1, and Performance ENV-1~~, and that manufacturer documentation is consistent with the product installed in the building.~~

~~*NI.2 Thermal Transmittance (U-Factor)*~~

~~provides default U-factors for skylights and for site-built fenestration in buildings with less than 10,000 ft^2 of site-built fenestration.~~

~~The default is consistent with default U-factors published in Table 4, Chapter 30, ASHRAE Fundamentals Handbook, 2001, which is referenced in the Energy Standards. Fenestration products fitting the two descriptions above may still use U-factors obtained through NFRC if available.~~

~~NI.2.1 Responsibilities for U-factor Compliance~~

~~This section describes the responsibilities of energy consultants, designers, architects, builders, installers, and building departments when is used for determining compliance with the U-factor requirements of the Efficiency Standards.~~

~~*NI.2.1.1 Energy Consultants, Designers, Architects*~~

~~*Site-Built Fenestration without U-factor Rated Using NFRC Procedures*~~

~~The procedure described below applies only to skylights and to site-built fenestration in buildings with less than 10,000 ft^2 of site-built fenestration. To determine compliance with the efficiency standards, the Glazing Type and Frame Type shown in must be identified from the manufacturer's documentation for the proposed glazing.~~

~~For the Prescriptive compliance method, the U-factor must be selected from for this Glazing Type and Frame Type and entered into the prescriptive ENV-1 form, Part 2 of 2, and must appear on the building plans.~~

~~For the Performance compliance method, the U-factor output information printed on the Performance ENV-1 form must be listed on the building plans. The PERF-1 and Performance ENV-1 forms must appear on the plans. The building plan window schedule list must indicate the proposed total U-factors for each fenestration assembly, and these values must be equal to or less than the U-factors listed on the Performance ENV-1 computer form.~~

~~Permit applications must include fenestration U-factor documentation for the Building Plan Checker. This documentation must include a copy of the manufacturer's documentation showing the Glazing Type information – number of panes, spacing of panes, glass type, gas fill type, coating emissivity and location – and the Frame Type – frame material type, presence of thermal breaks, and identification of structural glazing (glazing with no frame) that is used to determine the U-factor. If the proposed design uses multiple fenestration products or site-assembled fenestration products, manufacturer's documentation for each different U-factor for each glass unit must be attached to the plans. Manufacturer's documentation must be provided for each U-factor used for compliance.~~

~~Building plans shall identify all site-built fenestration and all site-built fenestration without U-factors rated using NFRC procedures.~~

~~*Mixed Fenestration Types*~~

~~If mixed fenestration is included in the compliance analysis, then the compliance submittal must demonstrate which are certified fenestration products and which are non-certified fenestration or site-assembled fenestration products. The manufacturer's documentation and calculations for each product must be included in the submittal, and either the ENV-1 or PERF-1 form must be included on the building plans.~~

~~***NI.2.1.2 Builder and Installer Responsibilities***~~

~~The builder is responsible for ensuring that the glass documentation showing the U-factor used for determining compliance is provided to the installer. The builder is responsible for ensuring that the persons preparing compliance documentation are specifying products that the builder intends to install. The builder is also responsible for ensuring that the installer installs glass with U-factors the same or lower than the U-factors used for compliance and ensuring that the field inspector for the building department is provided with manufacturer's documentation showing the U-factor and method of determining U-factor for the actual fenestration product installed. The builder should verify that these fenestration products are clearly shown on the building plans before fenestration products are purchased and installed.~~

~~***NI.2.1.3 Building Department Responsibilities***~~

~~*Plan Checker*~~

~~The building department plan checker is responsible for ensuring that the plans identify all site-built fenestration.~~

~~The plan checker shall ensure that for skylights and site-built fenestration using alternate default U-factors:~~

~~1. U-factors are identified on the plans,~~

~~2. the Glazing Type and Frame Type and have been provided documenting the method of determining the U-factor,~~

~~3. manufacturer documentation of the Glazing Type and Frame Type has been provided for the each of the fenestration products using alternate default U-factors, and~~

~~4. the building has less than 10,000 ft^2 of site-built fenestration.~~

~~Plans should be consistent with the compliance documentation, the Glazing Type and Frame Type and values, and Prescriptive ENV-1 Part 2 of 2 or Performance ENV-1.~~

~~*Building Inspector*~~

~~The building department field inspector is responsible for ensuring that the building using an alternate default U-factor has less than 10,000 ft^2 of site-built fenestration.~~

~~The building department field inspector is responsible for ensuring that manufacturer's documentation has been provided for the installed fenestration. The field inspector is responsible for ensuring that the U-factor for the installed fenestration is consistent with the plans, the Prescriptive ENV-1 Part 2 of 2 or the Performance PERF-1, and Performance ENV-1~~-C, and that manufacturer documentation is consistent with the product installed in the building.

~~Table NI-1 – Alternate U-Factors for Skylights and Eligible[1] Site-Built Fenestration~~

~~Product Type~~		~~Vertical Installation~~				~~Sloped Installation~~						
		~~Unlabeled Glazed Wall Systems~~ ~~(Site Built Windows)~~ ~~(includes site assembled fixed windows only, does not include operable windows)~~				~~Unlabeled Skylight with Curb~~ ~~(includes glass/plastic, flat/domed, fixed/operable)~~				~~Unlabeled Skylight without Curb~~ ~~(includes glass/plastic, flat/domed, fixed/operable)~~		
~~Frame Type~~		~~Aluminum without Thermal Break~~	~~Aluminum with Thermal Break~~	~~Wood/Vinyl~~	~~Structural Glazing~~	~~Aluminum without Thermal Break~~	~~Aluminum with Thermal Break~~	~~Reinforced Vinyl/ Aluminum Clad Wood~~	~~Wood/Vinyl~~	~~Aluminum without Thermal Break~~	~~Aluminum with Thermal Break~~	~~Structural Glazing~~
~~ID~~	~~Glazing Type~~											
	~~Single Glazing~~											
~~1~~	~~1/8" glass~~	~~1.22~~	~~1.11~~	~~0.98~~	~~1.11~~	~~1.98~~	~~1.89~~	~~1.75~~	~~1.47~~	~~1.36~~	~~1.25~~	~~1.25~~
~~2~~	~~1/4" acrylic/polycarb~~	~~1.08~~	~~0.96~~	~~0.84~~	~~0.96~~	~~1.82~~	~~1.73~~	~~1.60~~	~~1.31~~	~~1.21~~	~~1.10~~	~~1.10~~
~~3~~	~~1/8" acrylic/polycarb~~	~~1.15~~	~~1.04~~	~~0.91~~	~~1.04~~	~~1.90~~	~~1.81~~	~~1.68~~	~~1.39~~	~~1.29~~	~~1.18~~	~~1.18~~
	~~Double Glazing~~											
~~4~~	~~1/4" airspace~~	~~0.79~~	~~0.68~~	~~0.56~~	~~0.63~~	~~1.31~~	~~1.11~~	~~1.05~~	~~0.84~~	~~0.82~~	~~0.70~~	~~0.66~~
~~5~~	~~1/2" airspace~~	~~0.73~~	~~0.62~~	~~0.50~~	~~0.57~~	~~1.30~~	~~1.10~~	~~1.04~~	~~0.84~~	~~0.81~~	~~0.69~~	~~0.65~~
~~6~~	~~1/4" argon space~~	~~0.75~~	~~0.64~~	~~0.52~~	~~0.60~~	~~1.27~~	~~1.07~~	~~1.00~~	~~0.80~~	~~0.77~~	~~0.66~~	~~0.62~~
~~7~~	~~1/2" argon space~~	~~0.70~~	~~0.59~~	~~0.48~~	~~0.55~~	~~1.27~~	~~1.07~~	~~1.00~~	~~0.80~~	~~0.77~~	~~0.66~~	~~0.62~~
	~~Double Glazing, *e*=0.60 on surface 2 or 3~~											
~~8~~	~~1/4" airspace~~	~~0.76~~	~~0.65~~	~~0.53~~	~~0.61~~	~~1.27~~	~~1.08~~	~~1.01~~	~~0.81~~	~~0.78~~	~~0.67~~	~~0.63~~
~~9~~	~~1/2" airspace~~	~~0.69~~	~~0.58~~	~~0.47~~	~~0.54~~	~~1.27~~	~~1.07~~	~~1.00~~	~~0.80~~	~~0.77~~	~~0.66~~	~~0.62~~
~~10~~	~~1/4" argon space~~	~~0.72~~	~~0.61~~	~~0.49~~	~~0.56~~	~~1.23~~	~~1.03~~	~~0.97~~	~~0.76~~	~~0.74~~	~~0.63~~	~~0.58~~
~~11~~	~~1/2" argon space~~	~~0.67~~	~~0.56~~	~~0.44~~	~~0.51~~	~~1.23~~	~~1.03~~	~~0.97~~	~~0.76~~	~~0.74~~	~~0.63~~	~~0.58~~
	~~Double Glazing, *e*=0.40 on surface 2 or 3~~											
~~12~~	~~1/4" airspace~~	~~0.74~~	~~0.63~~	~~0.51~~	~~0.58~~	~~1.25~~	~~1.05~~	~~0.99~~	~~0.78~~	~~0.76~~	~~0.64~~	~~0.60~~
~~13~~	~~1/2" airspace~~	~~0.66~~	~~0.55~~	~~0.44~~	~~0.51~~	~~1.24~~	~~1.04~~	~~0.98~~	~~0.77~~	~~0.75~~	~~0.64~~	~~0.59~~
~~14~~	~~1/4" argon space~~	~~0.69~~	~~0.57~~	~~0.46~~	~~0.53~~	~~1.18~~	~~0.99~~	~~0.92~~	~~0.72~~	~~0.70~~	~~0.58~~	~~0.54~~
~~15~~	~~1/2" argon space~~	~~0.63~~	~~0.51~~	~~0.40~~	~~0.47~~	~~1.20~~	~~1.00~~	~~0.94~~	~~0.74~~	~~0.71~~	~~0.60~~	~~0.56~~
	~~Double Glazing, *e*=0.20 on surface 2 or 3~~											
~~16~~	~~1/4" airspace~~	~~0.70~~	~~0.59~~	~~0.48~~	~~0.55~~	~~1.20~~	~~1.00~~	~~0.94~~	~~0.74~~	~~0.71~~	~~0.60~~	~~0.56~~
~~17~~	~~1/2" airspace~~	~~0.62~~	~~0.51~~	~~0.39~~	~~0.46~~	~~1.20~~	~~1.00~~	~~0.94~~	~~0.74~~	~~0.71~~	~~0.60~~	~~0.56~~
~~18~~	~~1/4" argon space~~	~~0.64~~	~~0.53~~	~~0.42~~	~~0.49~~	~~1.14~~	~~0.94~~	~~0.88~~	~~0.68~~	~~0.65~~	~~0.54~~	~~0.50~~
~~19~~	~~1/2" argon space~~	~~0.57~~	~~0.46~~	~~0.35~~	~~0.42~~	~~1.15~~	~~0.95~~	~~0.89~~	~~0.68~~	~~0.66~~	~~0.55~~	~~0.51~~
	~~Double Glazing, *e*=0.10 on surface 2 or 3~~											

Product Type		Vertical Installation				Sloped Installation						
		Unlabeled Glazed Wall Systems (Site Built Windows) (includes site assembled fixed windows only, does not include operable windows)				Unlabeled Skylight with Curb (includes glass/plastic, flat/domed, fixed/operable)				Unlabeled Skylight without Curb (includes glass/plastic, flat/domed, fixed/operable)		
Frame Type		Aluminum without Thermal Break	Aluminum with Thermal Break	Wood/Vinyl	Structural Glazing	Aluminum without Thermal Break	Aluminum with Thermal Break	Reinforced Vinyl/ Aluminum Clad Wood	Wood/Vinyl	Aluminum without Thermal Break	Aluminum with Thermal Break	Structural Glazing
20	1/4" airspace	0.68	0.57	0.45	0.52	1.18	0.99	0.92	0.72	0.70	0.58	0.54
21	1/2" airspace	0.59	0.48	0.37	0.44	1.18	0.99	0.92	0.72	0.70	0.58	0.54
22	1/4" argon space	0.62	0.51	0.39	0.46	1.11	0.91	0.85	0.65	0.63	0.52	0.47
23	1/2" argon space	0.55	0.44	0.33	0.39	1.13	0.93	0.87	0.67	0.65	0.53	0.49
	Double Glazing, *e*=0.05 on surface 2 or 3											
24	1/4" airspace	0.67	0.56	0.44	0.51	1.17	0.97	0.91	0.70	0.68	0.57	0.52
25	1/2" airspace	0.57	0.46	0.35	0.42	1.17	0.98	0.91	0.71	0.69	0.58	0.53
26	1/4" argon space	0.60	0.49	0.38	0.44	1.09	0.89	0.83	0.63	0.61	0.50	0.45
27	1/2" argon space	0.53	0.42	0.31	0.38	1.11	0.91	0.85	0.65	0.63	0.52	0.47
	Triple Glazing											
28	1/4" airspaces	0.63	0.52	0.41	0.47	1.12	0.89	0.84	0.64	0.64	0.53	0.48
29	1/2" airspaces	0.57	0.46	0.35	0.41	1.10	0.87	0.81	0.61	0.62	0.51	0.45
30	1/4" argon spaces	0.60	0.49	0.38	0.43	1.09	0.86	0.80	0.60	0.61	0.50	0.44
31	1/2" argon spaces	0.55	0.45	0.34	0.39	1.07	0.84	0.79	0.59	0.59	0.48	0.42
	Triple Glazing, *e*=0.20 on surface 2,3,4, or 5											
32	1/4" airspaces	0.59	0.48	0.37	0.42	1.08	0.85	0.79	0.59	0.60	0.49	0.43
33	1/2" airspaces	0.52	0.41	0.30	0.35	1.05	0.82	0.77	0.57	0.57	0.46	0.41
34	1/4" argon spaces	0.54	0.44	0.33	0.38	1.02	0.79	0.74	0.54	0.55	0.44	0.38
35	1/2" argon spaces	0.49	0.38	0.28	0.33	1.01	0.78	0.73	0.53	0.54	0.43	0.37
	Triple Glazing, *e*=0.20 on surfaces 2 or 3 and 4 or 5											
36	1/4" airspaces	0.55	0.45	0.34	0.39	1.03	0.80	0.75	0.55	0.56	0.45	0.39
37	1/2" airspaces	0.48	0.37	0.26	0.31	1.01	0.78	0.73	0.53	0.54	0.43	0.37
38	1/4" argon spaces	0.50	0.39	0.29	0.34	0.99	0.75	0.70	0.50	0.51	0.40	0.35
39	1/2" argon spaces	0.45	0.34	0.24	0.29	0.97	0.74	0.69	0.49	0.50	0.39	0.33
	Triple Glazing, *e*=0.10 on surfaces 2 or 3 and 4 or 5											
40	1/4" airspaces	0.54	0.43	0.32	0.37	1.01	0.78	0.73	0.53	0.54	0.43	0.37
41	1/2" airspaces	0.46	0.35	0.25	0.29	0.99	0.76	0.71	0.51	0.52	0.41	0.36
42	1/4" argon spaces	0.48	0.38	0.27	0.32	0.96	0.73	0.68	0.48	0.49	0.38	0.32

~~Product Type~~		~~Vertical Installation~~				~~Sloped Installation~~						
		~~Unlabeled Glazed Wall Systems~~ ~~(Site Built Windows)~~ ~~(includes site assembled fixed windows only, does not include operable windows)~~				~~Unlabeled Skylight with Curb~~ ~~(includes glass/plastic, flat/domed, fixed/operable)~~				~~Unlabeled Skylight without Curb~~ ~~(includes glass/plastic, flat/domed, fixed/operable)~~		
~~Frame Type~~		~~Aluminum without Thermal Break~~	~~Aluminum with Thermal Break~~	~~Wood/Vinyl~~	~~Structural Glazing~~	~~Aluminum without Thermal Break~~	~~Aluminum with Thermal Break~~	~~Reinforced Vinyl/ Aluminum Clad Wood~~	~~Wood/Vinyl~~	~~Aluminum without Thermal Break~~	~~Aluminum with Thermal Break~~	~~Structural Glazing~~
~~43~~	~~1/2" argon spaces~~	~~0.42~~	~~0.32~~	~~0.21~~	~~0.26~~	~~0.95~~	~~0.72~~	~~0.67~~	~~0.47~~	~~0.48~~	~~0.37~~	~~0.31~~
	~~Quadruple Glazing, *e*=0.10 on surfaces 2 or 3 and 4 or 5~~											
~~44~~	~~1/4" airspaces~~	~~0.49~~	~~0.38~~	~~0.28~~	~~0.33~~	~~0.97~~	~~0.74~~	~~0.69~~	~~0.49~~	~~0.50~~	~~0.39~~	~~0.33~~
~~45~~	~~1/2" airspaces~~	~~0.43~~	~~0.32~~	~~0.22~~	~~0.27~~	~~0.94~~	~~0.71~~	~~0.66~~	~~0.46~~	~~0.47~~	~~0.36~~	~~0.30~~
~~46~~	~~1/4" argon spaces~~	~~0.45~~	~~0.34~~	~~0.24~~	~~0.29~~	~~0.93~~	~~0.70~~	~~0.65~~	~~0.45~~	~~0.46~~	~~0.35~~	~~0.30~~
~~47~~	~~1/2" argon spaces~~	~~0.41~~	~~0.30~~	~~0.20~~	~~0.24~~	~~0.91~~	~~0.68~~	~~0.63~~	~~0.43~~	~~0.44~~	~~0.33~~	~~0.28~~
~~48~~	~~1/4" krypton spaces~~	~~0.41~~	~~0.30~~	~~0.20~~	~~0.24~~	~~0.88~~	~~0.65~~	~~0.60~~	~~0.40~~	~~0.42~~	~~0.31~~	~~0.25~~

Nonresidential Appendix NA7 – 2008

Appendix NA7 – Acceptance Requirements for Nonresidential Buildings

NA7.1 Purpose and Scope

~~ACM NJ~~NA7 defines acceptance procedures that must be completed on certain controls and equipment before the installation is deemed to be in compliance with the Standards. These requirements apply to all newly installed equipment for which there are acceptance requirements in new and existing buildings~~before credit can be claimed for certain compliance measures~~. The procedures apply to nonresidential, high-rise residential and hotel/motel buildings as defined by the California Energy Commission's Energy Efficiency Standards for Nonresidential Buildings.

The purpose of the acceptance tests is to assure:

1. The presence of equipment or building components according to the specifications in the compliance documents.
2. Installation quality and proper functioning of the controls and equipment to meet the intent of the design and the Standards.

NA7.2 Introduction

Acceptance ~~Requirements~~ requirements are defined as ~~the application~~implementation of targeted inspection checks and functional and performance testing ~~conducted~~ to determine whether specific building components, equipment, systems, and interfaces between systems conform to the criteria set forth in the Standards and to related construction documents (plans or specifications). Acceptance ~~Requirements~~ requirements improve code compliance ~~can effective~~effectiveness~~ly improve code compliance~~ and help ~~determine whether equipment~~ meet~~s~~ the expected level of performance. ~~operational goals and whether it should be adjusted to increase efficiency and effectiveness.~~

NA7.3 Responsible Party

~~This section describes the process for completing the Acceptance Requirements. The steps include the following:~~

~~•Document plans showing sensor locations, devices, control sequences and notes,~~

~~•Review the installation, perform acceptance tests and document results, and~~

~~•Document the operating and maintenance information, complete installation certificate and indicate test results on the Certificate of Acceptance, and submit the Certificate to the building department prior to receive a final occupancy permit.~~

~~Acceptance testing is not intended to take the place of commissioning or test and balance procedures that a building owner might incorporate into a building project. It is an adjunct process focusing only on demonstrating compliance with the Standards.~~

~~The installing contractor, engineer of record or owners agent shall be responsible for reviewing the plans and specifications to assure they conform to the Acceptance Requirements. This is typically done prior to signing a Certificate of Compliance.~~

Persons eligible to sign a Certificate of Acceptance are those responsible for its preparation and licensed in the State of California as a civil engineer, mechanical engineer architect, or contractor (who is performing the applicable work). In the special circumstances set forth in Business and Professions Code sections 5537, 5538, and 6737.1, the person managing the installation of building components requiring a Certificate of Acceptance may sign the Certificate of Acceptance. The person meeting the above criteria who signs the Certificate of Acceptance shall be known as the "responsible party." Prior to signing a Certificate of Acceptance, the responsible party shall review the plans and specifications to assure that they conform to the acceptance criteria.

~~The installing contractor, engineer of record or owners agent shall be responsible for providing all necessary instrumentation, measurement and monitoring, and undertaking all required acceptance requirement procedures. They shall be responsible for correcting all performance deficiencies and again implementing the acceptance requirement procedures until all specified systems and equipment are performing in accordance with the Standards.~~

The installing ~~contractor, engineer of record or owners agent shall be responsible for documenting~~responsible party shall certify ~~the results~~compliance with ~~of~~ the acceptance requirements. ~~procedures including paper and electronic copies of all measurement and monitoring results.~~ They shall be responsible for performing data analysis, calculation of performance indices, and crosschecking results with the requirements of the Standard. They shall be responsible for issuing a Certificate of Acceptance as well as copies of all measurement and monitoring results for individual test procedures to the building department. Building departments shall not release a final Certificate of Occupancy until a Certificate of Acceptance, and all applicable acceptance requirements for code compliance forms, are -approved and submitted by the responsible party. ~~is submitted that demonstrates that the specified systems and equipment have been shown to be performing in accordance with the Standards. The installing contractor, engineer of record or owner's agent upon completion of undertaking all required acceptance requirement procedures~~A responsible party who is licensed shall record their State of California ~~Contractor's~~ contractor's ~~License~~ license number or their State of California ~~Professional~~ professional ~~Registration~~ registration ~~License~~ license ~~Number~~ number on each Certificate of Acceptance that they issue.

NA7.4 Building Envelope Acceptance Tests

Acceptance Requirements for installed Site-Built and Unlabeled Glazed Wall System Fenestration

NA7.4.1 Fenestration

Each fenestration product shall have either an NFRC label certificate or the Commission's Fenestration Certificate, FC-1 or FC-2, to identify the thermal performance of each fenestration product installed. The labels shall be located at the job site for verification by the enforcement agency. In addition, the responsible party shall fill out the Fenestration Acceptance Certificate. A copy of the certificate shall be given to the building owner and the enforcement agency for their records. The responsible party shall verify the thermal performance of each specified fenestration product being installed and shall ensure that it matches the energy compliance documentation and building plans.

NA7.4.1.1 Elements Requiring Verification:

The responsible party shall verify the following:

1. The thermal performance (e.g. U-factor, SHGC) for each fenestration product matches the building plans, energy compliance documentation, and the label certificate~~(s)~~,
2. ~~verify~~The delivery receipt or purchase order matches the delivered fenestration product(s).
3. Verify the NFRC Label Certificate is filled out and includes an NFRC's Certified Product Directory (CPD) number or that the FC-1 or FC-2 matches the purchase order.
4. The Certificate of Acceptance form is completed and signed.

NA7.4.1.2 Required Documentation

- NFRC Product Label Certificate:

- The label can list a single or multiple fenestration product, ~~with~~ each with ~~of~~ its own ~~certified product number (CPD).~~CPD number The CPD can be verified ~~of~~for ~~its~~ authenticity by contacting www.NFRC.org.

- ~~Energy~~ Commission's Fenestration Certificate:
  - The FC-1 and FC-2 are used to document products not certified ~~non~~by the NFRC ~~certified products~~ by using the ~~Energy~~ Commission's Default Table Values or the Alternate Default Fenestration Thermal Performance method as described in Appendix NA6.
    - FC-1 is used for vertical fenestration greater than 10,000 square feet ~~of vertical fenestration~~ and is limited to the Energy Commission's Default Values found in Table 116-A and Table 116-B or;
    - FC-2 is used for vertical fenestration less than 10,000 square feet ~~of vertical fenestration~~ and ~~is able to~~may use either the Energy Commission's Default Table Values found in Table 116-A and Table 116-B or may use the Alternate Default Fenestration Thermal Performance procedures described in Appenidx NA6.
- Purchase Order ~~(PO)~~ or Receipt:
  - A copy of the purchase order or a detailed payment receipt shall be used to cross reference with the NFRC Product Label Certificate or the ~~Energy Commission's~~ FC-1 or FC-2 values,
  - The purchase order or a detailed payment receipt should match the energy compliance documentation and the building plans.
- Fenestration Building Plans:
  - The building plans shall ~~indicate by~~ list~~ing~~ in a schedule ~~of~~ each fenestration product to be installed in the building.
- Certificate of Acceptance Form:
  - The acceptance form must be filled out by the responsible party and signed. ~~The responsible party or the installer is responsible for the actual specified installed fenestration.~~
  - The signed Certificate of Acceptance shall be submitted to the building department or jurisdiction. ~~for application for the final occupancy permit.~~
  - A copy of the Certificate of Acceptance ~~form~~ shall be given to the building owner.

NA7.5 Mechanical Systems Acceptance Tests

NA7.5.1 Outdoor Air

NA7.5.1.1 Variable Air Volume Systems Outdoor Air Acceptance

NA7.5.1.1.1 Construction Inspection

Prior to ~~Acceptance~~ functional ~~Testing~~testing, verify and document the following:

- ~~Outside air flow station is calibrated *OR* a calibration curve of outside air vs. outside air damper position, inlet vane signal, or VFD signal was completed during system TAB procedures.~~System controlling outside airflow was calibrated either in the field or factory.

NA7.5.1.1.2 ~~Equipment Testing~~Functional Testing

Step 1: If the system has an outdoor air economizer, force the economizer high limit to disable economizer control (e.g. for a fixed drybulb high limit, lower the setpoint below the current outdoor air temperature)

Step 2: ~~Drive all VAV boxes~~ Adjust supply airflow to ~~the greater of~~ either the sum of the minimum zone airflows or 30% of the total design airflow. Verify and document the following:

- Measured outside airflow reading ~~corresponds to no less than 9~~is within 10% of the total v~~alue found on the Standards Mechanical Plan Check document MECH-3, Column H or Column I (which ever is greater).~~entilation air called for in the Certificate of Compliance.
- ~~System operation stabilizes within 15 minutes after test procedures are initiated (no hunting).~~
- OSA controls stabilize within 5 minutes.

Step 3: Adjust supply air-flow ~~Drive all VAV boxes~~ to achieve design airflow. Verify and document the following:

- Measured outside airflow reading is within 10% of the total ventilation air called for in the Certificate of Compliance.
- ~~Measured outside airflow CFM corresponds to no less than 90% of the total value found on Standards Mechanical Plan Check document MECH-3, Column H or Column I (which ever is greater).~~
- OSA controls stabilize within 5 minutes.

Step 4: Restore system to "as-found" operating conditions

- ~~System operation stabilizes within 15 minutes after test procedures are initiated (no hunting).~~

NA7.5.1.2 Constant Volume System Outdoor Air Acceptance

NA7.5.1.2.1 Construction Inspection

Prior to ~~Acceptance~~ Functional Testing, verify and document the following:

- Minimum position is marked on the outside air damper.
- The system has ~~a fixed or motorized minimum outdoor air damper, or an economizer capable of~~ means of -maintaining the~~a~~ minimum outdoor air damper position.

NA7.5.1.2.2 ~~Equipment Testing~~Functional Testing

Step 1: If the system has an outdoor air economizer, force the economizer to the minimum position and stop outside air damper modulation~~high limit to disable economizer control~~ (e.g. for a fixed drybulb high limit, lower the setpoint below the current outdoor air temperature)

- Measured outside airflow reading is within 10% of the total ventilation air called for in the Certificate of Compliance.
- ~~Measured outside airflow CFM with damper at minimum position corresponds to no less than 90% of the total value found on the Standards Mechanical Plan Check document MECH-3, Column H or Column I (which ever is greater).~~

NA7.5.2 ~~Packaged~~Constant-Volume, Single-Zone, Unitary ~~HVAC Systems~~Air Conditioners and Heat Pumps

~~Acceptance requirements apply only to constant volume, direct expansion (DX) packaged systems with gas furnaces or heat pumps.~~

~~NJ.4.1 Constant Volume Packaged HVAC Systems Acceptance~~

NA7.5.2.1 Construction Inspection

Prior to ~~Performance~~ Functional Testing, verify and document the following:

- Thermostat is located within ~~the~~ the space-conditioning zone ~~zone~~that is ~~that the HVAC system serves~~served by the HVAC system.
- ~~Space temperature thermostat is factory-calibrated (proof required) or field-calibrated.~~
- ~~Appropriate temperature deadband has been programmed~~Thermostat meets the temperature adjustment and dead band requirements of Standards section 122(b).
- ~~Appropriate o~~Occupied, unoccupied, and holiday schedules have been programmed per the facility's schedule.
- ~~Appropriate p~~Pre-occupancy purge has been programmed ~~per~~ to meet the requirements of Standards ~~Standards Section~~ section 121(c)2.
- ~~Economizer lockout control sensor, if applicable, is factory-calibrated (proof required) or field-calibrated and setpoint properly set (refer to the ECONOMIZERS acceptance requirements section for detail).~~
- ~~Demand control ventilation controller, if applicable, is factory-calibrated (proof required) or field-calibrated and setpoint properly set (refer to the DEMAND CONTROL VENTILATION acceptance requirements section for detail).~~

NA7.5.2.2 ~~Equipment Testing~~Functional Testing

Step 1: Disable economizer and demand control ventilation systems (if applicable).

Step ~~1~~2: Simulate a heating ~~load~~ demand during the occupied condition ~~(e.g. by setting time schedule to include actual time and placing thermostat heating setpoint above actual temperature)~~. Verify and document the following:

- Supply fan operates continually ~~during occupied condition~~.
- ~~Gas-fired furnace, heat pump or electric heater, if applicable, stages on~~The unit provides heating.
- No cooling is provided by the unit.
- Outside air damper is ~~open to~~ at ~~the~~ minimum position.

Step ~~2~~3: Simulate ~~"no-load"~~operation in the dead band during occupied condition ~~(e.g. by setting time schedule to include actual time and placing thermostat heating setpoints below actual temperature and cooling setpoint below actual temperature)~~. Verify and document the following:

- Supply fan operates continually ~~during occupied condition~~.
- Neither heating nor cooling is provided by the unit.
- Outside air damper is ~~open to~~ at ~~the~~ minimum position.

~~Step 3: If there is an economizer, simulate cooling load and economizer operation, if applicable, during occupied condition (e.g. by setting time schedule to include actual time and placing thermostat cooling setpoint below actual temperature). Verify and document the following:~~

- ~~Supply fan operates continually during occupied condition.~~
- ~~Refer to the *ECONOMIZERS* acceptance requirements section for testing protocols.~~
  - ~~No heating is provided by the unit.~~

Step 4~~4~~: ~~If there is no economizer, s~~Simulate cooling ~~load~~ demand during occupied condition ~~(e.g. by setting time schedule to include actual time and placing thermostat cooling setpoint below actual temperature)~~. Lock out economizer (if applicable). Verify and document the following:

- Supply fan operates continually ~~during occupied condition~~.
- ~~Compressor(s) stage on~~The unit provides cooling.
- No heating is provided by the unit.
- Outside air damper is ~~open to~~ at ~~the~~ minimum position.

Step ~~5~~5: ~~Change the time schedule~~ Simulate operation in the dead band ~~force the unit into~~ during unoccupied mode. Verify and document the following:

- Supply fan ~~turns~~ is off.
- Outside air damper ~~closes completely~~is fully closed.
- Neither heating nor cooling is provided by the unit.

Step ~~6~~6: Simulate heating ~~load~~ demand during ~~setback~~ unoccupied conditions ~~(e.g. by setting time schedule to exclude actual time and placing thermostat setback heating setpoint above actual temperature)~~. Verify and document the following:

- Supply fan ~~cycles~~ is on (either continuously or cycling).
- Heating is provided by the unit~~Gas-fired furnace, heat pump or electric heater, if applicable, stages on~~.
- No cooling is provided by the unit.
- ~~Supply fan cycles off when heating equipment is disabled.~~
- Outside air damper is either closed or at minimum position.

~~Step 7: If there is an economizer, simulate cooling load and economizer operation, if applicable, during unoccupied condition (e.g. by setting time schedule to exclude actual time and placing thermostat setup cooling setpoint below actual temperature). Verify and document the following:~~

- ~~Supply fan cycles on.~~
- ~~Refer to the *ECONOMIZERS* acceptance requirements section for testing protocols.~~
- ~~Supply fan cycles off when call for cooling is satisfied (simulated by lowering the thermostat setpoint to below actual temperature).~~
- ~~Outside air damper closes when unit cycles off.~~

Step ~~8~~7: ~~If there is no economizer, s~~Simulate cooling ~~load~~ demand during ~~setup~~ unoccupied condition ~~(e.g. by setting time schedule to exclude actual time and placing thermostat setup cooling setpoint above actual temperature)~~. Lock out economizer (if applicable). Verify and document the following:

- Supply fan is on (either continuously or cycling).~~Supply fan cycles on.~~
- Cooling is provided by the unit. ~~Compressor(s) stage on to satisfy cooling space temperature setpoint.~~
- No heating is provided by the unit.
- ~~Supply fan cycles off when cooling equipment is disabled.~~
- Outside air damper is either closed or at minimum position.

Step ~~9~~8: Simulate manual override during unoccupied condition ~~(e.g. by setting time schedule to exclude actual time or by pressing override button)~~. Verify and document the following:

- System ~~reverts~~ operates in ~~to~~ "occupied" mode ~~and operates as described above to satisfy a heating, cooling, or no load condition~~.

- System reverts to "unoccupied" mode ~~turns off~~ when manual override time period expires.

Step 9: Restore economizer and demand control ventilation systems (if applicable), and remove all system overrides initiated during the test.

NA7.5.3. Air Distribution Systems

~~Acceptance requirements apply only to systems covered by Section 144(k).~~

~~NJ.5.1 Air Distribution Acceptance~~

NA7.5.3.1 Construction Inspection

Prior to ~~Performance~~ Functional Testing, verify and document the following:

- ~~Drawbands are either stainless steel worm-drive hose clamps or UV-resistant nylon duct ties~~Duct connections meet the requirements of Standards s~~S~~ection 124~~(b)~~.
- Flexible ducts are not compressed~~constricted in any way (for example pressing against immovable objects or squeezed through openings)~~.
- Duct~~ leakage tests shall be performed before access to ductwork and associated connections are blocked by permanently installed construction material.~~s are fully accessible for testing.
- Joints and seams are properly sealed according to the requirements of Standards s~~S~~ection 124.~~not sealed with a cloth back rubber adhesive tape unless used in combination with mastic and drawbands.~~
- ~~Duct R-values are verified.~~Insulation R-Values meet the minimum requirements of Standards s~~S~~ection 124(a).
- Insulation is protected from damage and suitable for outdoor service if applicable per Standards section 124(f).

NA7.5.3.2 ~~Equipment Testing~~Functional Testing

Step 1: Perform duct leakage test per ~~2003 Nonresidential ACM Approved Manual, Appendix NG, Section 4.3.8.2~~Reference Nonresidential Appendix NA1. Certify the following:

- Duct leakage conforms to the requirements of Standards ~~S~~section 144(k) and 149(b)1D.~~.~~

Step 2: Obtain HERS Rater field verification as required by Reference Nonresidential ~~Chapter 7 and Appendix NG~~Appendix NA1~~5~~.

~~NJ.6. Lighting Control Systems~~

~~Lighting control testing is performed on:~~

- ~~Manual Daylighting Controls.~~
- ~~Automatic Daylighting Controls.~~
- ~~Occupancy Sensors.~~
- ~~Automatic Time-switch Control.~~

~~NJ.6.1 Automatic Daylighting Controls Acceptance~~

~~NJ.6.1.1 Construction Inspection~~

~~Prior to Performance Testing, verify and document the following:~~

- ~~All control devices (photocells) have been properly located, factory calibrated (proof required) or field-calibrated and set for appropriate set points and threshold light levels.~~
- ~~Installer has provided documentation of setpoints, setting and programming for each device.~~

- ~~Luminaires located in either a horizontal daylit area(s) or a vertical daylit area(s) are powered by a separate lighting circuit from non-daylit areas.~~

~~*NJ.6.1.2 Equipment Testing*~~

~~*Continuous Dimming Control Systems*~~

~~Step 1: Simulate bright conditions for a continuous dimming control system. Verify and document the following:~~

- ~~Lighting power reduction is at least 65% under fully dimmed conditions.~~
- ~~At least one control step reduces the lighting power by at least 30%.~~
- ~~Only luminaires in daylit zone are affected by daylight control.~~
- ~~Automatic daylight control system reduces the amount of light delivered to the space uniformly.~~
- ~~Dimming control system provides reduced flicker operation over the entire operating range per Standards Section 119(e)2.~~
- ~~Lumen measurements in the space, location of measurements and specific device settings, program settings and other measurements are documented.~~

~~Step 2: Simulate dark conditions for a continuous dimming control system. Verify and document the following:~~

- ~~Automatic daylight control system increases the amount of light delivered to the space uniformly.~~
- ~~Dimming control system provides reduced flicker operation over the entire operating range per Standards Section 119(e)2.~~
- ~~Lumen measurements in the space, location of measurements and specific device settings, program settings and other measurements are documented.~~

~~*Stepped Dimming Control Systems*~~

~~Step 1: Simulate bright conditions for a stepped dimming control system. Verify and document the following:~~

- ~~Lighting power reduction is at least 50% under fully dimmed conditions.~~
- ~~Only luminaires in daylit zone are affected by daylight control.~~
- ~~Automatic daylight control system reduces the amount of light delivered to the space relatively uniformly as per Section 131(b).~~
- ~~Automatic daylight control system reduces the amount of light delivered to the space per manufacturer's specifications for power level verses light level.~~
- ~~Minimum time delay between step changes is 3 minutes to prevent short cycling.~~
- ~~Lumen measurements in the space, location of measurements and specific device settings, program settings and other measurements are documented.~~

~~Step 2: Simulate dark conditions for a stepped dimming control system. Verify and document the following:~~

- ~~Automatic daylight control system increases the amount of light delivered to the space per manufacturer's specifications for power level verses light level.~~
- ~~Stepped dimming control system provides reduced flicker over the entire operating range per Standards Section 119(e)2.~~
- ~~Minimum time delay between step changes is 3 minutes to prevent short cycling.~~
- ~~Lumen measurements in the space, location of measurements and specific device settings, program settings and other measurements are documented.~~

~~*Stepped Switching Control Systems*~~

~~Step 1: Simulate bright conditions for a stepped switching control system. Verify and document the following:~~

- ~~Lighting power reduction is at least 50% under fully switched conditions per Standards Section 119(e)1.~~
- ~~Only luminaires in daylit zone are affected by daylight control.~~
- ~~Automatic daylight control system reduces the amount of light delivered to the space relatively uniformly as per Section 131(b).~~
- ~~Automatic daylight control system reduces the amount of light delivered to the space per manufacturer's specifications for power level verses light level.~~
- ~~Single- or multiple-stepped switching controls provide a dead band of at least three minutes between switching thresholds to prevent short cycling.~~
- ~~Lumen measurements in the space, location of measurements and specific device settings, program settings and other measurements are documented.~~

~~Step 2: Simulate dark conditions for a stepped switching control system. Verify and document the following:~~

- ~~Automatic daylight control system increases the amount of light delivered to the space per manufacturer's specifications for power level verses light level.~~
- ~~Single- or multiple-stepped switching controls provide a dead band of at least three minutes between switching thresholds to prevent short cycling.~~
- ~~Lumen measurements in the space, location of measurements and specific device settings, program settings and other measurements are documented.~~

~~***NJ.6.2 Occupancy Sensor Acceptance***~~

~~*NJ.6.2.1 Construction Inspection*~~

~~Prior to Performance Testing, verify and document the following:~~

- ~~Occupancy sensor has been located to minimize false signals.~~
- ~~Occupancy sensors do not encounter any obstructions that could adversely affect desired performance.~~
- ~~Ultrasound occupancy sensors do not emit audible sound.~~

~~*NJ.6.2.2 Equipment Testing*~~

~~Step 1: For a representative sample of building spaces, simulate an unoccupied condition. Verify and document the following:~~

- ~~Lights controlled by occupancy sensors turn off within a maximum of 30 minutes from the start of an unoccupied condition per Standard Section 119(d).~~
- ~~The occupant sensor does not trigger a false "on" from movement in an area adjacent to the controlled space or from HVAC operation.~~
- ~~Signal sensitivity is adequate to achieve desired control.~~

~~Step 2: For a representative sample of building spaces, simulate an occupied condition. Verify and document the following:~~

- ~~Status indicator or annunciator operates correctly.~~
- ~~Lights controlled by occupancy sensors turn on immediately upon an occupied condition, *OR* sensor indicates space is "occupied" and lights are turned on manually (automatic OFF and manual ON control strategy).~~

~~***NJ.6.3 Manual Daylighting Controls Acceptance***~~

~~*NJ.6.3.1 Construction Inspection*~~

~~Prior to Performance Testing, verify and document the following:~~

- ~~If dimming ballasts are specified for light fixtures within the daylit area, make sure they meet all the Standards requirements, including "reduced flicker operation" for manual dimming control systems.~~

~~*NJ.6.3.2 Equipment Testing*~~*Functional Testing*

~~Step 1: Perform manual switching control. Verify and document the following:~~

- ~~Manual switching or dimming achieves a lighting power reduction of at least 50%.~~
- ~~The amount of light delivered to the space is uniformly reduced.~~

~~***NJ.6.4 Automatic Time Switch Control Acceptance***~~

~~*NJ.6.4.1 Construction Inspection*~~

~~Prior to Performance Testing, verify and document the following:~~

- ~~Automatic time switch control is programmed with acceptable weekday, weekend, and holiday (if applicable) schedules.~~
- ~~Document for the owner automatic time switch programming including weekday, weekend, holiday schedules as well as all set-up and preference program settings.~~
- ~~Verify the correct time and date is properly set in the time switch.~~
- ~~Verify the battery is installed and energized.~~
- ~~Override time limit is no more than 2 hours.~~

~~*NJ.6.4.2 Equipment Testing*~~

~~Step 1: Simulate occupied condition. Verify and document the following:~~

- ~~All lights can be turned on and off by their respective area control switch.~~
- ~~Verify the switch only operates lighting in the ceiling-height partitioned area in which the switch is located.~~

~~Step 2: Simulate unoccupied condition. Verify and document the following:~~

- ~~All non-exempt lighting turn off per Section 131 (d)1.~~
- ~~Manual override switch allows only the lights in the selected ceiling height partitioned space where the override switch is located, to turn on or remain on until the next scheduled shut off occurs.~~
- ~~All non-exempt lighting turns off.~~

NA7.5.4 Air Economizer Controls

~~Economizer testing is performed on all built-up systems and on packaged systems per Standards Section 144 (e)1. Air economizers installed by the HVAC system manufacturer and certified to the commission as being factory calibrated and tested do not require field testing.~~

~~***NJ.7.1 Economizer Acceptance***~~

NA7.5.4.1 Construction Inspection

Prior to ~~Performance~~ Functional Testing, verify and document the following:

- Economizer lockout setpoint complies with Table 144-C ~~per~~ of Standards s~~S~~ection 144-(e)-3.
- ~~System controls are wired correctly to ensure economizer is fully integrated (i.e. economizer will operate when mechanical cooling is enabled).~~
- Economizer lockout control sensor is located to prevent false readings.~~location is adequate (open to air but not exposed to direct sunlight nor in an enclosure; away from sources of building exhaust; at least 25 feet away from cooling towers).~~

- ~~Relief fan or return fan (if applicable) operates as necessary when the economizer is enabled to control building pressure.~~
- ~~If no relief fan or return fan is installed, barometric relief dampers are installed to relieve building pressure when the economizer is operating.~~System is designed to provide up to 100% outside air without over-pressurizing the building.
- For systems with DDC controls lockout sensor(s) are either factory calibrated or field calibrated.
- For systems with non-DDC controls, manufacturer's startup and testing procedures have been applied

NA7.5.4.2 ~~Equipment Testing~~Functional Testing

Step 1: Disable demand control ventilation systems (if applicable)

Step ~~1~~2: Enable the economizer and ~~Simulate~~ simulate a cooling ~~load~~ demand ~~and enable the~~ large enough to drive the economizer fully open ~~by adjusting the lockout control (fixed or differential dry-bulb or enthalpy sensor depending on system type) setpoint~~. Verify and document the following:

- ~~Economizer damper modulates opens per Standards Section 144 (e)1A to maximum position to satisfy cooling space temperature setpoint.~~
- ~~Return air damper modulates closed and is completely closed when economizer damper is 100% open.~~
- Economizer damper is 100% open and return air damper is 100% closed~~before mechanical cooling is enabled~~.
- For systems that meet the criteria of Standards section -144(e)1, verify that the economizer remains 100% open when the cooling demand can no longer be met by the economizer alone.
- All~~s~~ applicable fans and ~~Relief~~ dampers ~~fan or return fan (if applicable) is operating or barometric relief dampers freely swing open.~~operate as intended to maintain building pressure.
- ~~Mechanical cooling is only enabled if cooling space temperature setpoint is not met with economizer at 100% open.~~
- ~~Doors are not pushed ajar from over pressurization.~~
- The unit heating is disabled.

Step ~~2~~3: ~~Continue from Step 1 and d~~Disable the economizer ~~by adjusting the lockout control (fixed or differential dry-bulb or enthalpy sensor depending on system type) setpoint~~ and simulate a cooling demand. Verify and document the following:

- Economizer damper closes to its minimum position.
- All applicable fans and dampers operate as intended to maintain building pressure.
- ~~Return air damper opens to normal operating position.~~
- ~~Relief fan (if applicable) shuts off or barometric relief dampers close. Return fan (if applicable) may still operate even when economizer is disabled.~~
- ~~Mechanical cooling remains enabled until cooling space temperature setpoint is met.~~
- The unit heating is disabled

Step 4: Simulate a heating demand and set the economizer so that it is capable of operating (i.e. actual outdoor air conditions are below lockout setpoint). Verify the following:

- The economizer is at minimum position

Step 5~~4~~: Restore demand control ventilation systems (if applicable) and remove all system overrides initiated during the test.

NA7.5.5 Demand Control Ventilation (DCV) Systems

~~Demand control ventilation is tested on package systems per Standards Section 121 (c)3.~~

~~NJ.8.1 Packaged Systems DCV Acceptance~~

~~NJ.8~~NA7.5.5~~.1~~.1 Construction Inspection

Prior to ~~Performance~~ Functional Testing, verify and document the following:

- Carbon dioxide control sensor is factory calibrated ~~(proof required)~~ or field-calibrated per Standards s ~~S~~ection 121(c)4. ~~with an accuracy of no less than 75 ppm.~~
- The sensor is located in the ~~room~~ high density space between ~~1ft~~ 3ft and 6 ft above the floor or at the anticipated level of the occupants' heads.
- ~~System controls are wired correctly to ensure proper control of outdoor air damper system.~~

NA7.5.5.2 ~~Equipment Testing~~Functional Testing

Step 1: Disable economizer controls

Step ~~1~~2: Simulate a ~~high CO_2~~signal at or slightly above the CO_2 setpoint ~~load and enable the demand control ventilation by adjusting the demand control ventilation controller setpoint below ambient CO2 levels~~. Verify and document the following:

- For single zone units, ~~Outdoor~~ outdoor air damper modulates opens ~~per Standards to maximum position~~ to satisfy ~~outdoor air requirements specified in~~ the total ventilation air called for in the Certificate of Compliance.
- For multiple zone units, either outdoor air damper or zone damper modulate open to satisfy the zone ventilation requirements.
- ~~Section 121(c).~~

Step ~~2~~3: ~~Continue from Step 1 and d~~Simulate signal well below the CO_2 setpoint ~~isable demand control ventilation by adjusting the demand control ventilation controller setpoint above ambient CO2 levels~~. Verify and document the following:

- For single zone units, ~~Outdoor~~ outdoor air damper ~~closes~~ modulates to the design minimum value~~to minimum position~~.
- For multiple zone units, either outdoor air damper or zone damper modulate to satisfy the reduced zone ventilation requirements.

~~Step 4: Enable economizer controls and simulate conditions that will fully open the economizer damper.~~

~~Step 5: Simulate a low CO_2 signal. Verify and document the outside air damper stays fully opened.~~

~~.~~

Step 6: Restore economizer controls and remove all system overrides initiated during the test.

NA7.5.6 Supply Fan Variable ~~Frequency Drive Systems~~Flow Controls

~~NJ.9.1 Supply Fan Variable Flow Controls~~

NA7.5.6.1 Construction Inspection

Prior to ~~Performance~~ Functional Testing, verify and document the following:

- Discharge static pressure sensors ~~is~~ are either factory calibrated ~~(proof required)~~ or field-calibrated ~~with secondary source~~.

- The static pressure location, setpoint, and reset control meets the requirements of Standards sSection 144(c)2C and 144(c)2D.
-

•Disable discharge static pressure reset sequences to prevent unwanted interaction while performing tests.

NA7.5.6.2 Equipment TestingFunctional Testing

Step 1: Drive all VAV boxes to achieve Simulate demand for design airflow. Verify and document the following:

- Witness proper response from supply fan (e.g. VFD ramps up to full speed; inlet vanes open full)Supply fan controls modulate to increase capacity.
- Supply fan maintains discharge static pressure within +/-10% of the current operating set point..
- •Measured maximum airflow corresponds to design and/or TAB report within +/-10%.
- System operation Supply fan controls stabilizes within a reasonable amount of time 5 minute periodafter test procedures are initiated (no hunting).

Step 2: Drive all VAV boxes to Simulate demand for minimum flow or to achieve 30% total design airflow whichever is larger. Verify and document the following:

- Witness proper response from supply fan (VFD slows fan speed; inlet vanes close).Supply fan controls modulate to decrease capacity.
- •Supply fan maintains discharge static pressure within +/-10% of setpoint.
- •System operation stabilizes within a reasonable amount of time after test procedures are initiated (no hunting).
- Current operating setpoint has decreased (for systems with DDC to the zone level).
- Supply fan maintains discharge static pressure within +/-10% of the current operating setpoint.
- Supply fan controls stabilize within a 5 minute period.

Step 3: Restore system to correct operating conditions

NJ.10. Hydronic System Controls Acceptance

Hydronic controls Acceptance Testing will be performed on:

- •Variable Flow Controls
- •Automatic Isolation Controls
- •Supply Water Temperature Reset Controls
- •Water-loop Heat Pump Controls
- •Variable Frequency Drive Control

NJ.10.1 Variable Flow Controls

NJ.10.1.1 Construction Inspection

Prior to Acceptance Testing, verify and document the following:

- •Valve and piping arrangements were installed per the design drawings to achieve flow reduction requirements.
- •Installed valve and hydronic connection pressure ratings meet specifications.

- ~~Installed valve actuator torque characteristics meet specifications.~~

~~*NJ.10.1.2 Equipment Testing*~~*NFunctional Testing*

~~RStep 1: Open all control valves. Verify and document the following:~~

- ~~System operation achieves design conditions.~~

~~Step 2: Initiate closure of icontrol valves. Verify and document the following:~~

- ~~The design pump flow control strategy achieves flow reduction requirements.~~
- ~~Ensure all valves operate correctly against the minimum flow system pressure condition.~~

A7.5.7 ~~Automatic Isolation Controls~~Valve Leakage Test

NA7.5.7.1 Construction Inspection

Prior to ~~Acceptance~~ Functional Testing, verify and document the following:

- Valve and piping arrangements were installed per the design drawings ~~to achieve equipment isolation requirements~~.
- ~~Installed valve and hydronic connection pressure ratings meet specifications.~~
- ~~Installed valve actuator torque characteristics meet specifications.~~

NA7.5.7.2 ~~Equipment Testing~~Functional Testing

Step 1: Dead head the pumps using the discharge isolation valves at the pumps. Document the following:

- Record the differential pressure across the pumps

Step 2: Reopen the pump discharge isolation valves. Automatically close all valves on ~~these~~the systems being tested. If 3-way valves are present, close off the bypass line. Verify and document the following:

- The valves automatically close.
- Record the pressure differential across the pump
- Verify that the pressure differential is within 5% of the reading from Step 1.

Step 3: Restore system to correct operating conditions

~~Step 1: Open all control valves. Verify and document the following:~~

- ~~System operation achieves design conditions.~~

~~Step 2: Initiate shut-down sequence on individual pieces of equipment. Verify and document the following:~~

- ~~The design control strategy meets isolation requirements automatically upon equipment shut-down.~~
- ~~Ensure all valves operate correctly at shut-off system pressure conditions.~~

NA7.5.8 Supply Water Temperature Reset Controls

NA7.5.8.1 Construction Inspection

Prior to ~~Acceptance~~ Functional Testing, verify and document the following:

- ~~All sensors have been calibrated.~~Supply water temperature sensors have been either factory or field calibrated.
- ~~Sensor locations are adequate to achieve accurate measurements.~~
- ~~Installed sensors comply with specifications.~~

NA7.5.8.2 ~~Equipment Testing~~Functional Testing

Step 1: Manually change design control variable to maximum setpoint. Verify and document the following:

- Chilled or hot water temperature setpoint is reset to appropriate value.
- Actual supply temperature changes to meet setpoint.

Step 2: Manually change design control variable to minimum setpoint. Verify and document the following:

- Chilled or hot water temperature setpoint is reset to appropriate value.
- Actual supply temperature changes to meet setpoint.

Step 3: Manually change design control variable back to correct condition. Verify and document the following:

- Chilled or hot water temperature set-point is reset to appropriate value.
- Actual supply temperature changes to meet setpoint.

~~NJ.10.4 Water-loop Heat Pump Controls~~

~~*NJ.10.4.1 Construction Inspection*~~

~~Prior to Acceptance Testing, verify and document the following:~~

- ~~Valves were installed per the design drawings to achieve equipment isolation requirements.~~
- ~~Installed valve and hydronic connection pressure ratings meet specifications.~~
- ~~Installed valve actuator torque characteristics meet specifications.~~
- ~~All sensor locations comply with design drawings.~~
- ~~All sensors are calibrated.~~
- ~~VFD minimum speed setpoint exceeds motor manufacturer's requirements.~~
- ~~VFD minimum speed setpoint should not be set below the pumping energy curve inflection point (i.e. combination of pump-motor-VFD efficiency at reduced load may cause power requirements to increase upon further reduction in load).~~

~~*NJ.10.4.2 Equipment Testing*~~

~~Step 1: Open all control valves. Verify and document the following:~~

- ~~System operation achieves design conditions +/- 5%.~~
- ~~VFD operates at 100% speed at full flow conditions.~~

~~Step 2: Initiate shut-down sequence on each individual heat pumps. Verify and document the following:~~

- ~~Isolation valves close automatically upon unit shut-down.~~
- ~~Ensure all valves operate correctly at shut-off system pressure conditions.~~
- ~~Witness proper response from VFD (speed decreases as valves close).~~
- ~~System operation stabilizes within 5 minutes after test procedures are initiated (no hunting).~~

~~Step 3: Adjust system operation to achieve 50% flow. Verify and document the following:~~

- ~~VFD input power less than 30% of design.~~

~~Step 4: Adjust system operation to achieve a flow rate that would result in the VFD operating below minimum speed setpoint. Verify and document the following:~~

- ~~Ensure VFD maintains minimum speed setpoint regardless of system flow operating point.~~

NA7.5.9 Hydronic System Variable ~~Frequency Drive~~ Flow Controls

NA7.5.9.1 Construction Inspection

Prior to ~~Acceptance~~ Functional Testing, verify and document the following:

- ~~All valves, sensors, and equipment were installed per the design drawings.~~
- ~~All installed valves, sensors, and equipment meet specifications.~~
- ~~All~~ Pressure sensors are either factory or field calibrated.
- ~~VFD minimum speed setpoint exceeds motor manufacturer's requirements.~~
- ~~VFD minimum speed setpoint should not be set below the pumping energy curve inflection point (i.e. combination of pump-motor-VFD efficiency characteristics at reduced load may cause input power to increase upon further reduction in load).~~

NA7.5.9.2 ~~Equipment Testing~~Functional Testing

Step 1: Open ~~all~~ control valves to increase water flow to a minimum of 90% design flow. Verify and document the following:

- ~~System operation achieves design conditions +/- 5%.~~
- ~~VFD operates at 100% speed at full flow conditions.~~Pump speed increases
- System pressure is either within ±5% of current operating setpoint or the pressure is below the setpoint and the pumps are operating at 100% speed.
- System operation stabilizes within 5 minutes after test procedures are initiated.

Step 2: Modulate control valves ~~closed~~to reduce water flow to 50% of the design flow or less, but not lower than the pump minimum flow. Verify and document the following:

- ~~Ensure all valves operate correctly at system operating pressure conditions.~~
- ~~Witness proper response from VFD (~~Pump speed decreases~~as valves close)~~.
- ~~System operation stabilizes within 5 minutes after test procedures are initiated (no hunting).~~

~~System pressure is within 5% of setpoint~~

- Current operating setpoint has decreased (for systems with DDC to the zone level).
- Current operating setpoint has not increased (for all other systems).
- System pressure is within 5% of current operating setpoint
- System operation stabilizes within 5 minutes after test procedures are initiated.

NA7.5.10 Fault Detection and Diagnostics (FDD) for Packaged Direct-Expansion Units

NA7.5.10.1 Construction Inspection

Verify FDD hardware is installed on equipment by the manufacturer and that equipment make and model include factory-installed FDD hardware that match the information indicated on copies of the manufacturer's cut sheets and on the plans and specifications.

Eligibility Criteria
A fault detection and diagnostics (FDD) system for direct-expansion packaged units shall contain the following features~~,~~ to be eligible for credit in the performance calculation method:

1. The unit shall include a factory-installed economizer and shall limit the economizer deadband to no more than 2°F.
2. The unit shall include direct-drive actuators on outside air and return air dampers.
3. The unit shall include an integrated economizer with either differential dry-bulb or differential enthalpy control.
4. The unit shall include a low temperature lockout on the compressor to prevent coil freeze-up or comfort problems.
5. Outside air and return air dampers shall have maximum leakage rates conforming to ASHRAE 90.1-2004.
6. The unit shall have an adjustable expansion control device such as a thermostatic expansion valve (TXV).
7. To improve the ability to troubleshoot charge and compressor operation, a high-pressure refrigerant port will be located on the liquid line. A low-pressure refrigerant port will be located on the suction line.
8. The following sensors should be permanently installed to monitor system operation and ~~,~~the controller should have the capability of displaying the value of each parameter:

   • Refrigerant suction pressure

   • Refrigerant suction temperature

   • Liquid line pressure

   • Liquid line temperature

   • Outside air temperature

• Outside air relative humidity

   • Return air temperature

   • Return air relative humidity

   • Supply air temperature

   • Supply air relative humidity.

The controller will provide system status by indicating the following conditions:

   • Compressor enabled

   • Economizer enabled

- Free cooling available
- Mixed air low limit cycle active
- Heating enabled.

The unit controller shall have the capability to manually initiate each operating mode so that the operation of compressors, economizers, fans, and heating system can be independently tested and verified.

NA7.5.10.2 Functional Testing

1. Test low airflow condition by replacing the existing filter with a dirty filter or appropriate obstruction.
2. Verify that the fault detection and diagnostics system reports the fault.
3. Verify that the system is able to verify the correct refrigerant charge.
4. Calibrate outside air, return air, and supply air temperature sensors.

NA7.5.11 Automatic fault detection and diagnostics (FDD) for air handling units and zone terminal units.

NA7.5.11.1 Functional Testing for Air Handling Units

Testing of each AHU with FDD controls shall include the following tests.

1. Sensor drift/failure:

Step 1: Disconnect outside air temperature sensor from unit controller.

Step 2: Verify that the FDD system reports a fault. ~~(question: what kind of notification is required? Email/page?)~~

Step 3: Connect OAT sensor to the unit controller.

Step 4: Verify that FDD indicates normal system operation.

2. Damper/actuator fault:

Step 1: From the control system workstation, command the mixing box dampers to full open (100% outdoor air).

Step 2: Disconnect power to the actuator and verify that a fault is reported at the control workstation.

Step 3: Reconnect power to the actuator and command the mixing box dampers to full open.

Step 4: Verify that the control system does not report a fault.

Step 5: From the control system workstation, command the mixing box dampers to a full-closed position (0% outdoor air),

Step 6: Disconnect power to the actuator and verify that a fault is reported at the control workstation.

Step 7: Reconnect power to the actuator and command the dampers closed.

Step 8: Verify that the control system does not report a fault during normal operation.

3. Valve/actuator fault:

From the control system workstation, command the heating and cooling coil valves ~~valve~~ to full open or closed, then disconnect power to the actuator and verify that a fault is reported at the control workstation.

4. Inappropriate simultaneous heating, mechanical cooling, and/or economizing:

Step 1: From the control system workstation, override the heating coil valve and verify that a fault is reported at the control workstation.

Step 2: From the control system workstation, override the cooling coil valve and verify that a fault is reported at the control workstation.

Step 3: From the control system workstation, override the mixing box dampers and verify that a fault is reported at the control workstation.

NA7.5.11.2 Functional Testing for Zone Terminal Units

Testing shall be performed on one of each type of terminal unit (VAV box) in the project. A minimum of 5% of the terminal boxes shall be tested.

1. Sensor drift/failure:

Step 1: Disconnect the tubing to the differential pressure sensor of the VAV box.

Step 2: Verify that control system detects and reports the fault.

Step 3: Reconnect the sensor and verify proper sensor operation.

Step 4: Verify that the control system does not report a fault.

2. Damper/actuator fault:

(a) Damper stuck open.

Step 1: Command the damper to be fully open (room temperature above setpoint).

Step 2: Disconnect the actuator to the damper.

Step 3: Adjust the cooling setpoint so that the room temperature is below the cooling setpoint to command the damper to the minimum position. Verify that the control system reports a fault.

Step 4: Reconnect the actuator and restore to normal operation.

(b) Damper stuck closed.

Step 1: Set the damper to the minimum position.

Step 2: Disconnect the actuator to the damper.

Step 3: Set the cooling setpoint below the room temperature to simulate a call for cooling. Verify that the control system reports a fault.

Step 4: Reconnect the actuator and restore to normal operation.

3. Valve/actuator fault (For systems with hydronic reheat):

Step 1: Command the reheat coil valve to (full) open.

Step 2: Disconnect power to the actuator. Set the heating setpoint temperature to be lower than the current space temperature, to command the valve closed. Verify that the fault is reported at the control workstation.

Step 3: Reconnect the actuator and restore normal operation.

4. Feedback loop tuning fault (unstable airflow):

Step 1: Set the integral coefficient of the box controller to a value 50 times the current value.

Step 2: The damper cycles continuously and airflow is unstable. Verify that the control system detects and reports the fault.

Step 3: Reset the integral coefficient of the controller to the original value to restore normal operation.

5. Disconnected inlet duct:

From the control system workstation, command the damper to full closed, then disconnect power to the actuator and verify that a fault is reported at the control workstation.

~~Step 3: Adjust system operation to achieve 50% flow. Verify and document the following:~~

- ~~VFD input power less than 30% of design.~~

~~Step 4: Adjust system operation to achieve a flow rate that would result in the VFD operating below minimum speed setpoint. Verify and document the following:~~

- ~~Ensure VFD maintains minimum speed setpoint regardless of system flow operating point.~~

NA7.5.12 Distributed Energy Storage DX AC Systems Acceptance Tests[1]

These acceptance requirements apply only to constant or variable volume, direct expansion (DX) systems with distributed energy storage (DES/DXAC). These acceptance requirements are in addition to those for other systems or equipment such as economizers, packaged equipment, etc.

NA7.5.12.1 Construction Inspection

Prior to Performance Testing, verify and document the following:

- The water tank is filled to the proper level.
- The water tank is sitting on a foundation with adequate structural strength.
- The water tank is insulated and the top cover is in place.
- The DES/DXAC is installed correctly (refrigerant piping, etc.).
- Verify that the correct model number is installed and configured.

NA7.5.12.2 Equipment Testing

Step 1: Simulate cooling load during d~~D~~aytime period (e.g. by setting time schedule to include actual time and placing thermostat cooling set-point below actual temperature). Verify and document the following:

- Supply fan operates continually.
- If the DES/DXAC has cooling capacity, DES/DXAC runs to meet the cooling demand (in ~~I~~ice ~~M~~melt mode).
- If the DES/DXAC has no ice and there is a call for cooling, the DES/DXAC runs in direct cooling mode.

Step 2: Simulate no cooling load during daytime condition. Verify and document the following:

- Supply fan operates as per the facility thermostat or control system.
- The DES/DXAC and the condensing unit do not run.

Step 3: Simulate no cooling load during morning shoulder time period. Verify and document the following:

- The DES/DXAC is idle.

Step 4: Simulate a cooling load during morning shoulder time period. Verify and document the following:

- The DES/DXAC runs in ~~D~~direct ~~C~~cooling mode.

NA7.5.12.3 Calibrating Controls

Set the proper time and date, as per manufacturer's installation manual for approved installers.

-

NA7.5.13 Thermal Energy Storage (TES) Systems

The following acceptance tests apply to thermal energy storage systems that are used in conjunction with chilled water air conditioning systems.

Eligibility Criteria

The following types of TES systems are eligible for compliance credit:

• Chilled Water Storage

• Ice-on-Coil

• Ice Harvester

• Brine

• Ice-Slurry

• Eutectic Salt

• Clathrate Hydrate Slurry (CHS)

The following Certificate of Compliance information for both the chiller and the storage tank shall be provided on the plans to document the key TES System parameters and allow plan check comparison to the inputs used in the DOE-2 simulation. DOE-2 keywords are shown in ALL CAPITALS in parentheses.

Chiller:

• Brand and Model

• Type (Centrifugal, Reciprocating, Other)

• Capacity (tons) (SIZE)

• Starting Efficiency (kW/ton) at beginning of ice production (COMP - KW/TON - START)

• Ending Efficiency (kW/ton) at end of ice production (COMP - KW/TON/END)

• Capacity Reduction (% / o F) (PER – COMP - REDUCT/F)

Storage Tank:

• Storage Type (TES-TYPE)

• Number of Tanks (SIZE)

• Storage Capacity per Tank (ton-hours) (SIZE)

• Storage Rate (tons) (COOL – STORE - RATE)

• Discharge Rate (tons) (COOL – SUPPLY - RATE)

• Auxiliary Power (watts) (PUMPS + AUX - KW)

• Tank Area (CTANK – LOSS - COEFF)

• Tank Insulation (R - Value) (CTANK – LOSS - COEFF)

Functional Testing

Acceptance testing also shall be conducted and documented on the Certificate of Acceptance in two parts:

In the TES System Design Verification part, the installing contractor shall certify the following information, which verifies proper installation of the TES System consistent with system design expectations:

• The TES system is one of the above eligible systems.

• Initial charge rate of the storage tanks (tons).

• Final charge rate of the storage tank (tons).

• Initial discharge rate of the storage tanks (tons).

• Final discharge rate of the storage tank (tons).

• Charge test time (hrs).

• Discharge test time (hrs).

• Tank storage capacity after charge (ton-hrs).

• Tank storage capacity after discharge (ton-hrs).

• Tank standby storage losses (UA).

• Initial chiller efficiency (kW/ton) during charging.

• Final chiller efficiency (kW/ton) during charging.

In the TES System Controls and Operation Verification part, the installing contractor also shall complete the following acceptance testing to insure the TES System is controlled and operates consistent with the compliance simulation. The installing contractor shall convey the results of the testing to the Building Department using the Certificate of Acceptance.

1. Verify that the TES system and the chilled water plant is controlled and monitored by an energy management system (EMS).

2. Force the time to be between 9:00 p.m. and 9:00 a.m. and simulate a partial or no charge of the tank and simulate no cooling load by setting the indoor temperature set point higher than the ambient temperature. Verify that the TES system starts charging (storing energy).

3. Force the time to be between 6:00 p.m. and 9:00 p.m. and simulate a partial charge on the tank and simulate a cooling load by setting the indoor temperature set point lower than the ambient temperature. Verify that the TES system starts discharging.

4. Force the time to be between noon and 6:00 p.m. and simulate a cooling load by lowering the indoor air temperature set point below the ambient temperature. Verify that the tank starts discharging and the compressor is off.

5. Force the time to be between 9:00 a.m. to noon, and simulate a cooling load by lowering the indoor air temperature set point below the ambient temperature. Verify that the tank does not discharge and the cooling load is met by the compressor only.

6. Force the time to be between 9:00 p.m. and 9:00 a.m. and simulate a full tank charge by changing the sensor that indicates tank capacity to the Energy Management System so that it indicates a full tank capacity. Verify that the tank charging is stopped.

7. Force the time to be between noon and 6:00 p.m. and simulate no cooling load by setting the indoor temperature set point above the ambient temperature. Verify that the tank does not discharge and the compressor is off.

~~*NJ.6. Lighting Control Systems*~~

~~Lighting control testing is performed on:~~

- ~~Manual Daylighting Controls.~~
- ~~Automatic Daylighting Controls.~~
- ~~Occupancy Sensors.~~
- ~~Automatic Time-switch Control.~~

~~NJ.6.1 Automatic Daylighting Controls Acceptance~~

~~*NJ.6.1.1 Construction Inspection*~~

~~Prior to Performance Testing, verify and document the following:~~

- ~~All control devices (photocells) have been properly located, factory calibrated (proof required) or field-calibrated and set for appropriate set points and threshold light levels.~~
- ~~Installer has provided documentation of setpoints, setting and programming for each device.~~
- ~~Luminaires located in either a horizontal daylit area(s) or a vertical daylit area(s) are powered by a separate lighting circuit from non-daylit areas.~~

~~*NJ.6.1.2 Equipment Testing*~~

~~*Continuous Dimming Control Systems*~~

~~Step 1: Simulate bright conditions for a continuous dimming control system. Verify and document the following:~~

- ~~Lighting power reduction is at least 65% under fully dimmed conditions.~~
- ~~At least one control step reduces the lighting power by at least 30%.~~
- ~~Only luminaires in daylit zone are affected by daylight control.~~
- ~~Automatic daylight control system reduces the amount of light delivered to the space uniformly.~~
- ~~Dimming control system provides reduced flicker operation over the entire operating range per Standards Section 119(e)2.~~
- ~~Lumen measurements in the space, location of measurements and specific device settings, program settings and other measurements are documented.~~

~~Step 2: Simulate dark conditions for a continuous dimming control system. Verify and document the following:~~

- ~~Automatic daylight control system increases the amount of light delivered to the space uniformly.~~
- ~~Dimming control system provides reduced flicker operation over the entire operating range per Standards Section 119(e)2.~~
- ~~Lumen measurements in the space, location of measurements and specific device settings, program settings and other measurements are documented.~~

~~*Stepped Dimming Control Systems*~~

~~Step 1: Simulate bright conditions for a stepped dimming control system. Verify and document the following:~~

- ~~Lighting power reduction is at least 50% under fully dimmed conditions.~~

- ~~Only luminaires in daylit zone are affected by daylight control.~~
- ~~Automatic daylight control system reduces the amount of light delivered to the space relatively uniformly as per Section 131(b).~~
- ~~Automatic daylight control system reduces the amount of light delivered to the space per manufacturer's specifications for power level verses light level.~~
- ~~Minimum time delay between step changes is 3 minutes to prevent short cycling.~~
- ~~Lumen measurements in the space, location of measurements and specific device settings, program settings and other measurements are documented.~~

~~Step 2: Simulate dark conditions for a stepped dimming control system. Verify and document the following:~~

- ~~Automatic daylight control system increases the amount of light delivered to the space per manufacturer's specifications for power level verses light level.~~
- ~~Stepped dimming control system provides reduced flicker over the entire operating range per Standards Section 119(e)2.~~
- ~~Minimum time delay between step changes is 3 minutes to prevent short cycling.~~
- ~~Lumen measurements in the space, location of measurements and specific device settings, program settings and other measurements are documented.~~

~~*Stepped Switching Control Systems*~~

~~Step 1: Simulate bright conditions for a stepped switching control system. Verify and document the following:~~

- ~~Lighting power reduction is at least 50% under fully switched conditions per Standards Section 119(e)1.~~
- ~~Only luminaires in daylit zone are affected by daylight control.~~
- ~~Automatic daylight control system reduces the amount of light delivered to the space relatively uniformly as per Section 131(b).~~
- ~~Automatic daylight control system reduces the amount of light delivered to the space per manufacturer's specifications for power level verses light level.~~
- ~~Single- or multiple-stepped switching controls provide a dead band of at least three minutes between switching thresholds to prevent short cycling.~~
- ~~Lumen measurements in the space, location of measurements and specific device settings, program settings and other measurements are documented.~~

~~Step 2: Simulate dark conditions for a stepped switching control system. Verify and document the following:~~

- ~~Automatic daylight control system increases the amount of light delivered to the space per manufacturer's specifications for power level verses light level.~~
- ~~Single- or multiple-stepped switching controls provide a dead band of at least three minutes between switching thresholds to prevent short cycling.~~
- ~~Lumen measurements in the space, location of measurements and specific device settings, program settings and other measurements are documented.~~

~~NJ.6.2 Occupancy Sensor Acceptance~~

~~*NJ.6.2.1 Construction Inspection*~~

~~Prior to Performance Testing, verify and document the following:~~

- ~~Occupancy sensor has been located to minimize false signals.~~

- ~~Occupancy sensors do not encounter any obstructions that could adversely affect desired performance.~~
- ~~Ultrasound occupancy sensors do not emit audible sound.~~

~~*NJ.6.2.2 Equipment Testing*~~

~~Step 1: For a representative sample of building spaces, simulate an unoccupied condition. Verify and document the following:~~

- ~~Lights controlled by occupancy sensors turn off within a maximum of 30 minutes from the start of an unoccupied condition per Standard Section 119(d).~~
- ~~The occupant sensor does not trigger a false "on" from movement in an area adjacent to the controlled space or from HVAC operation.~~
- ~~Signal sensitivity is adequate to achieve desired control.~~

~~Step 2: For a representative sample of building spaces, simulate an occupied condition. Verify and document the following:~~

- ~~Status indicator or annunciator operates correctly.~~
- ~~Lights controlled by occupancy sensors turn on immediately upon an occupied condition, *OR* sensor indicates space is "occupied" and lights are turned on manually (automatic OFF and manual ON control strategy).~~

~~NJ.6.3 Manual Daylighting Controls Acceptance~~

~~*NJ.6.3.1 Construction Inspection*~~

~~Prior to Performance Testing, verify and document the following:~~

- ~~If dimming ballasts are specified for light fixtures within the daylit area, make sure they meet all the Standards requirements, including "reduced flicker operation" for manual dimming control systems.~~

~~*NJ.6.3.2 Equipment Testing*~~

~~Step 1: Perform manual switching control. Verify and document the following:~~

- ~~Manual switching or dimming achieves a lighting power reduction of at least 50%.~~
- ~~The amount of light delivered to the space is uniformly reduced.~~

~~NJ.6.4 Automatic Time Switch Control Acceptance~~

~~*NJ.6.4.1 Construction Inspection*~~

~~Prior to Performance Testing, verify and document the following:~~

- ~~Automatic time switch control is programmed with acceptable weekday, weekend, and holiday (if applicable) schedules.~~
- ~~Document for the owner automatic time switch programming including weekday, weekend, holiday schedules as well as all set-up and preference program settings.~~
- ~~Verify the correct time and date is properly set in the time switch.~~
- ~~Verify the battery is installed and energized.~~
- ~~Override time limit is no more than 2 hours.~~

~~***NJ.6.4.2 Equipment Testing***~~

~~Step 1: Simulate occupied condition. Verify and document the following:~~

- ~~All lights can be turned on and off by their respective area control switch.~~
- ~~Verify the switch only operates lighting in the ceiling-height partitioned area in which the switch is located.~~

~~Step 2: Simulate unoccupied condition. Verify and document the following:~~

- ~~All non-exempt lighting turn off per Section 131 (d)1.~~
- ~~Manual override switch allows only the lights in the selected ceiling height partitioned space where the override switch is located, to turn on or remain on until the next scheduled shut off occurs.~~
- ~~All non-exempt lighting turns off.~~

NA7.6 Indoor Lighting Control Systems

Lighting control testing is performed on:

- Manual daylighting controls.
- Automatic daylighting controls.
- Occupancy sensors.
- Automatic time-switch control.

NA7.6.1 Automatic Daylighting Controls Acceptance

NA7.6.1.1 Construction Inspection

Prior to Functional testing, verify and document the following:

- All control devices (photocontrols) have been properly located, field-calibrated and set for appropriate set points and threshold light levels.
- Installer has provided documentation of setpoints, setting and programming for each device.
- Luminaires located in primary or secondary sidelit zone(s) or in skylit area(s) are powered by a separate lighting circuit from non-daylit areas. Compare location of daylighting controlled luminaires against description of sidelit and skylit zones on the building plans.
- Luminaires located in primary or secondary sidelit zone(s) are powered by a separate lighting circuit from skylit area(s)
- If the total area of the primary sidelit area or the total area of the toplit area in an enclosed space is greater than 2,500 sf, the location where calibration adjustments are made is remote from photosensor
- In spaces with ceiling heights greater than 11 feet, the location where calibration adjustments are made is readily accessible to authorized personnel.

NA7.6.1.2 Functional testing

All photocontrols serving more than 5,000 square feet of daylit area shall undergo functional testing. Photocontrols that are serving smaller spaces may be sampled as follows:

For buildings with up to five (5) photocontrols, all photocontrols shall be tested. For buildings with more than five (5) photocontrols, sampling may be done on spaces with similar sensors and cardinal orientations of glazing. If the first photocontrol in the sample group passes the functional test, the remaining building spaces in

the sample group also pass. If the first photocontrol in the sample group fails the functional test, the rest of the photocontrols in the group shall be tested. If any tested photocontrol fails the functional test, it shall be repaired, replaced or adjusted until it passes the test

For each photocontrol to be tested do the following:

Continuous Dimming Control Systems

This requirement is for systems that have more than 10 levels of controlled light output in a given zone.

Step 1: Identify the minimum daylighting location in the controlled zone (Reference Location). This can be identified using either the illuminance method or the distance method.

Illuminance Method

- Turn OFF controlled lighting and measure daylight illuminance within zones illuminated by controlled luminaires.
- Identify the Reference Location; this is the location with lowest daylight illuminance in the zone illuminated by controlled luminaires. This location will be used for illuminance measurements in subsequent tests.
- Turn controlled lights back ON.

Distance Method

- Identify the location within the zone illuminated by controlled luminaires that is furthest away from daylight sources. This is the Reference Location and will be used for illuminance measurements in subsequent tests.

Step 2: No daylight test. Simulate or provide conditions without daylight. Verify and document the following:

- Automatic daylight control system provides appropriate control so that electric lighting system is providing full light output unless otherwise specified by design documents.
- Document the reference illuminance, which is the electric lighting illuminance level at the reference location identified in Step 1.
- That the dimming control system provides reduced flicker operation over the entire operating range per Standards section 119(e)2.

Step 3: Full daylight test. Simulate or provide bright conditions so that the illuminance (fc) from daylight only at the Reference Location identified in Step 1 is greater than the Reference Illuminance (fc) measured at this location during the no daylight test documented in Step 2. Verify and document the following:

- Lighting power reduction is at least 65% under fully dimmed conditions and light output is stable with no discernable flicker.
- Only luminaires in daylit zones are affected by daylight control.
- Automatic daylight control system reduces the amount of light delivered to the space uniformly as described in Section 131(b).

Step 4: Partial daylight test. Simulate or provide bright conditions where illuminance (fc) from daylight only at the Reference Location is between 60% and 95% of Reference Illuminance (fc) documented in Step 2. Verify and document the following:

- Measure that the combined illuminance of daylight and controlled electric lighting (fc) at the reference location is no less than the electric lighting illuminance (fc) at this location during the no daylight test documented in Step 2.
- Measure that the combined illuminance of daylight and controlled electric lighting (fc) at the Reference Location is no greater than 150% of the reference illuminance (fc) documented in Step 2

Stepped Switching or Stepped Dimming Control Systems

This requirement is for systems that have no more than 10 discrete steps of control of light output.

If the control has three steps of control or less, conduct the following tests for all steps of control. If the control has more than three steps of control, testing three steps of control is sufficient for showing compliance.

Step 1: Identify the minimum daylighting location(s) in the controlled zone

If lighting controls are staged so that one stage is closer to the daylight source, identify a minimum daylighting location for each stage of control. If all stages of control are equally close to the daylight source, select a single minimum daylighting location representing all stages of the control. This minimum daylighting location for each stage of control is designated as the reference location for that stage of control and will be used for illuminance measurements in subsequent tests. The reference location can be identified using either the illuminance method or the distance method.

Illuminance Method

- Turn OFF controlled lighting and measure daylight illuminances within a zone illuminated by controlled luminaires.
- Identify the reference location; this is the location with lowest daylight illuminance in the zone illuminated by controlled luminaires. This location will be used for illuminance measurements in subsequent tests.
- Turn controlled lights back ON.

Distance Method

- Identify the location within the zone illuminated by controlled luminaires that is furthest away from daylight sources. This is the reference location and will be used for illuminance measurements in subsequent tests.

Step 2: No daylight test. Simulate or provide conditions without daylight for a stepped switching or stepped dimming control system. Verify and document the following:

- If the control is manually adjusted (not self commissioning), make note of the time delay and override time delay or set time delay to minimum setting. This condition shall be in effect through step 4.

- Automatic daylight control system turns ON all stages of controlled lights
- Stepped dimming control system provides reduced flicker over the entire operating range per Standards section 119(e)2.
- Document the reference illuminance which is the electric lighting illuminance level measured at the reference location identified in Step 1.

Step 3: Full daylight test. Simulate or provide bright conditions so that the illuminance (fc) from daylight only at the reference location identified in Step 1 is greater than the corresponding reference illuminance documented in Step 2. Verify and document the following:

- Lighting power reduction of controlled luminaires is at least 65%
- Only luminaires in daylit zones (toplit zone, primary sidelit zone and secondary sidelit zone) are affected by daylight control.
- Automatic daylight control system reduces the amount of light delivered to the space relatively uniformly as per Section 131(b).

Step 4: Partial daylight test. For each control stage that is tested in this step, the control stages with lower setpoints than the stage tested are left ON and those stages of control with higher setpoints are dimmed or controlled off. Simulate or provide moderately bright conditions so that each control stage turns on and off or dims. Verify and document the following for each control stage:

- The measured illuminance contribution from the control stage tested at its corresponding reference location.
- The total daylight and electric lighting illuminance level measured at its reference location just after the stage of control dims or shuts off a stage of lighting:
  1. The total measured illumination shall be no less than the than the reference illuminance measured at this location during the no daylight test documented in Step 2.
  2. The total measured illumination shall be no greater than 150% of the reference illuminance.
- The total daylight and electric lighting illuminance measured at the reference location that results in the control stage increasing the light output from the controlled lighting shall be greater than the total daylight and electric lighting illuminance measured at the reference location just after the stage of control dims or shuts off the stage of lighting.
- The control stage shall not cycle on and off or cycle between dim and undimmed while daylight illuminance remains constant.
- Only luminaires in daylit zones (toplit zone, primary sidelit zone, and secondary sidelit zone) are affected by daylight control.
- Automatic daylight control system reduces the amount of light delivered to the space relatively uniformly as per Section 131(b).

Step 5: Verify time delay.

- Verify that time delay automatically resets to normal mode within 60 minutes.
- Set normal mode time delay to at least three minutes.
- Confirm that there is a time delay of at least 3 minutes between the time when illuminance exceeds the setpoint for a given dimming stage and when the control dims or switches off the controlled lights.

NA7.6.2 Occupancy Sensor Acceptance

NA7.6.2.1 Construction Inspection

Prior to Functional testing, verify and document the following:

- Occupancy sensor has been located to minimize false signals:
  - No closer than four (4) feet from a HVAC diffuser.
  - PIR sensor pattern does not enter into adjacent zones.
- Occupancy sensors do not encounter any obstructions that could adversely affect desired performance.
- Ultrasonic occupancy sensors do not emit audible sound.

NA7.6.2.2 Functional testing

For buildings with up to seven (7) occupancy sensors, all occupancy sensors shall be tested. For buildings with more than seven (7) occupancy sensors, sampling may be done on spaces with similar sensors and space geometries. If the first occupancy sensor in the sample group passes the acceptance test, the remaining building spaces in the sample group also pass. If the first occupancy sensor in the sample group fails the acceptance test the rest of the occupancy sensors in that group must be tested. If any tested occupancy sensor fails it shall be repaired, replaced or adjusted until it passes the test.

For each sensor to be tested do the following:

Step 1: For a representative sample of building spaces, simulate an unoccupied condition. Verify and document the following:

- Lights controlled by occupancy sensors turn off within a maximum of 30 minutes from the start of an unoccupied condition per Standard Section 119(d).
- The occupant sensor does not trigger a false "on" from movement in an area adjacent to the space containing the controlled luminaires or from HVAC operation.
- Signal sensitivity is adequate to achieve desired control.

Step 2: For a representative sample of building spaces, simulate an occupied condition. Verify and document the following:

- Status indicator or annunciator operates correctly.
- Lights controlled by occupancy sensors turn on immediately upon an occupied condition, *OR s*ensor indicates space is "occupied" and lights are turned on manually (automatic OFF and manual ON control strategy).

NA7.6.3 Manual Daylighting Controls Acceptance

NA7.6.3.1 Construction Inspection

Prior to Functional testing, verify and document the following:

- If dimming ballasts are specified for light fixtures within the primary sidelit zone or skylit zone, make sure they meet all the Standards requirements, including "reduced flicker operation" for manual dimming control systems.

NA7.6.3.2 Functional testing

Step 1: Perform manual switching control. Verify and document the following:

- Only lights in the primary sidelit zone or the skylit zone as defined in Section 131(c) are controlled. Compare daylighting controlled luminaires against description of the primary sidelit and skylit zones on the building plans.
- Manual switching or dimming achieves a lighting power reduction of at least 50%.
- The amount of light delivered to the space is uniformly reduced.

NA7.6.4 Automatic Time Switch Control Acceptance

NA7.6.4.1 Construction Inspection

Prior to Functional testing, verify and document the following:

- Automatic time switch control is programmed with acceptable weekday, weekend, and holiday (if applicable) schedules.

- Document for the owner automatic time switch programming including weekday, weekend, holiday schedules as well as all set-up and preference program settings.
- Verify the correct time and date is properly set in the time switch.
- Verify the battery back-up (if applicable) is installed and energized.
- Override time limit is set to no more than 2 hours.
- Override switches remote from area with controlled luminaires have annunciator lights.

NA7.6.4.2 Functional testing

Step 1: Simulate occupied condition. Verify and document the following:

- All lights can be turned on and off by their respective area control switch.
- Verify the switch only operates lighting in the enclosed space (ceiling-height partitioned area) in which the switch is located.

Step 2: Simulate unoccupied condition. Verify and document the following:

- All non-exempt lighting turn off per Standards Section 131(d)1.
- Manual override switch allows only the lights in the enclosed space (ceiling height partitioned) where the override switch is located to turn on or remain on until the next scheduled shut off occurs.

NA7.7 Outdoor Lighting Acceptance Tests

NA7.7.1 Outdoor Motion Sensor Acceptance

NA7.7.1.1 Construction Inspection

Prior to Functional testing, verify and document the following:

- Motion sensor has been located to minimize false signals.
- Sensor is not triggered by motion outside of adjacent area.
- Desired motion sensor coverage is not blocked by obstructions that could adversely affect performance.

NA7.7.1.2 Functional testing

Step 1: Simulate motion in area under lights controlled by the motion sensor. Verify and document the following:

- Status indicator operates correctly.
- Lights controlled by motion sensors turn on immediately upon entry into the area lit by the controlled lights near the motion sensor.
- Signal sensitivity is adequate to achieve desired control.

Step 2: Simulate no motion in area with lighting controlled by the sensor but with motion adjacent to this area. Verify and document the following:

- Lights controlled by motion sensors turn off within a maximum of 30 minutes from the start of an unoccupied condition per Standard Section 119(d).
- The occupant sensor does not trigger a false “on” from movement outside of the controlled area
- Signal sensitivity is adequate to achieve desired control.

NA7.7.2 Outdoor Lighting Shut-off Controls

NA7.7.2.1 Construction Inspection

Prior to Functional testing, verify and document the following:

- Controls to turn off lights during daytime hours are installed.
- Astronomical and standard time switch control is programmed with acceptable weekday, weekend, and holiday (if applicable) schedules.
- Demonstrate and document for the owner time switch programming including weekday, weekend, holiday schedules as well as all set-up and preference program settings.
- Lighting systems that meet the criteria of Section 132(c)2 of the Standards shall have a scheduling control (time switch) installed which is able to schedule separately:
    - a reduction in outdoor lighting power by 50 to 80%
    - turning off all outdoor lighting covered by Section 132(c)2 of the Standards
- Verify that the correct time and date is properly set in the standard and astronomical time switch.
- Verify that the correct latitude, longitude and time zone are set in the astronomical time switch.
- Verify the battery back-up (if applicable) is installed and energized in the standard and astronomical time switch.

NA7.7.2.2 Outdoor Photocontrol Functional testing

Note photocontrol must be used in conjunction with time switch or motion sensor to meet the requirements of Section 132(c)2 of the Standards.

Step 1: Nighttime test. Simulate or provide conditions without daylight. Verify and document:

- Controlled lights turn on.

Step 2: Sunrise test: Provide between 10 and 30 horizontal footcandles (fc) to photosensor. Verify and document the following:

- Controlled lights turn off.

NA7.7.2.3 Astronomical Time Switch Functional testing

Step 1: Power off test. Program control with location information, local date and time, and schedules. Disconnect control from power source for at least 1 hour. Verify and document:

- Control retains all programmed settings and local date and time

Step 2: Night schedule ON test. Simulate or provide times when the sun has set and lights are scheduled to be ON. Verify and document:

- Controlled lights turn on

Step 3: Night schedule OFF test. Simulate or provide times when the sun has set and lights are scheduled to be OFF. Verify and document:

- Controlled lights turn off

Step 4: Sunrise test: Simulate or provide the programmed offset time after the time of local sunrise.

- Controlled lights turn off

NA7.7.2.4 Standard (non-astronomical) Time Switch Functional Testing

Note: this control must be used in conjunction with a photocontrol to meet requirements of Section 132(c) of the Standards.

Step 1: Power off test. Program control with local date and time and schedules. Disconnect control from power source for at least 1 hour. Verify and document:

- Control retains all programmed schedules and local date and time

Step 2: On schedule test. Simulate or provide times when lights are scheduled to be ON. Verify and document:

- Controlled lights turn on

Step 3: Schedule test. Simulate or provide times when the sun has set and lights are scheduled to be OFF. Verify and document:

- Controlled lights turn off

NA7.8 Sign Lighting Acceptance Tests

Reserved For Future Use

[1] From AEC, Distributed Energy Storage for Direct-Expansion Air Conditioners, January 27, 2005.

Nonresidential Appendix NA8 – 2008

Appendix NA8 – Illuminance Categories and Luminaire Power

Illuminance Categories

Please see Chapter 10 in the IESNA Lighting Handbook, Ninth Edition.

Illuminance Categories and Luminaire Power

Luminaire power shall be taken from the following tables.

Table NA8-1 – Fluorescent Circline
Table NA8-2 – Compact Fluorescent 2D
Table NA8-3 – Compact Fluorescent
Table NA8-4 – Long Compact Fluorescent
Table NA8-5 – Fluorescent U-Tubes
Table NA8-6 – Fluorescent Linear Lamps – Preheat
Table NA8-7 – Fluorescent Linear Lamps T5
Table NA8-8 – Fluorescent Rapid Start T-8
Table NA8-9 – Fluorescent Rapid Start T-12
Table NA8-10 – Fluorescent Rapid Start High Output (HO) T8 & T12, 8 ft
Table NA8-11 – Fluorescent Instant Start (single pin base "Slimline") T12, 4 ft
Table NA8-12 – Fluorescent Instant Start (single pin base "Slimline") T8 & T12, 8 ft.
Table NA8-13 – High Intensity Discharge
Table NA8-14 – 12 Volt Tungsten Halogen Lamps Including MR16, Bi-pin, AR70, AR111, PAR36

Table NA8-~~B~~-1 – Fluorescent Circline

	Lamps		Ballasts				
Type	Number	Designation	Number	Designation	Description	System Watts	Comment
Rapid Start (22 W)	1	FC8T9	1	MAG STAND.	Mag. Stand.	~~27~~ 29	8" OD
T5 Program Start (22 W)	1	FC9T5	1	ELECT NO	Electronic Normal Light	28	8" OD
	2	FC9T5	1	ELECT NO	Electronic Normal Light	53	
T5 Program Start (40 W)	1	FC12T5	1	ELECT NO	Electronic Normal Light	~~41~~ 44	12" OD
	2	FC12T5	1	ELECT NO	Electronic Normal Light	~~80~~ 84	
T5 Rapid Start (55 W)	1	FC12T5HO	1	ELECT NO	Electronic Normal Light	~~55~~ 61	12" OD
	2	FC12Tag5HO	1	ELECT NO	Electronic Normal Light	~~103~~ 111	
	1	FC12T5HO	1	ELECT DIM	Electronic Dimming	~~12~~~59 8~62	
	2	FC12T5HO	1	ELECT DIM	Electronic Dimming	~~24~~~114 18~120	
T5 Rapid Start (40 + 22 W)	1+1	FC12T5/FC9T5	1	ELECT NO	Electronic Normal Light	68	8” & 12" OD

RO = ballast factor 70 to 85% NO = ballast factor 85 to 100% HO = ballast factor >100%

Table NA8-~~NB~~-2 – Compact Fluorescent 2D

	Lamps		Ballasts				
Type	Number	Designation	Number	Designation	Description	System Watts	Comment
10W, GR10q-4 Four Pin Base	1	CFS10W/GR10q	1	MAG STD	Mag. Stand.	16	3.6" across
	1	CFS10W/GR10q	1	ELECT	Electronic	13	
	2	CFS10W/GR10q	1	ELECT	Electronic	26	
16W, GR10q-4 Four Pin Base	1	CFS16W/GR10q	1	MAG STD	Mag. Stand.	23	5.5" across
	1	CFS16W/GR10q	1	ELECT	Electronic	15	
	2	CFS16W/GR10q	1	ELECT	Electronic	30	
21W, GR10q-4 Four Pin Base	1	CFS21W/GR10q	1	MAG STD	Mag. Stand.	31	5.5" across
	1	CFS21W/GR10q	1	ELECT	Electronic	21	
	2	CFS21W/GR10q	1	ELECT	Electronic	42	
28W, GR10q-4 Four Pin Base	1	CFS28W/GR10q	1	MAG STD	Mag. Stand.	38	8.1" across
	1	CFS28W/GR10q	1	ELECT	Electronic	28	
	2	CFS28W/GR10q	1	ELECT	Electronic	56	
(38W, GR10q-4 Four Pin Base	1	CFS38W/GR10q	1	ELECT	Electronic	37	8.1" across
	2	CFS38W/GR10q	1	ELECT	Electronic	74	

RO = ballast factor 70 to 85% NO = ballast factor 85 to 100% HO = ballast factor >100%

Table NA8-~~B~~-3 – Compact Fluorescent

Type	Lamps		Ballasts			System Watts	Comment
	Number	Designation	Number	Designation	Description		
Twin (5 W, G23 Two Pin Base - F5TT Lamp)	1	CFT5W/G23	1	MAG STD	Mag. Stand.	9	4.1" MOL
	2	CFT5W/G23	2	MAG STD	Mag. Stand.	18	
Twin (7 W, G23 Two Pin Base - F7TT Lamp)	1	CFT7W/G23	1	MAG STD	Mag. Stand.	11	5.3" MOL
	2	CFT7W/G23	2	MAG STD	Mag. Stand.	22	
Twin (7 W, 2G7 Four Pin Base - F7TT Lamp)	1	CFT7W/2G7	1	ELECT	Electronic	8	5.3" MOL
	2	CFT7W/2G7	2	ELECT	Electronic	16	
Twin (9 W, G23 Two Pin Base - F9TT Lamp)	1	CFT9W/G23	1	MAG STD	Mag. Stand.	13	6.5" MOL
	2	CFT9W/G23	2	MAG STD	Mag. Stand.	26	
Twin (9 W, 2G7 Four Pin Base - F9TT Lamp)	1	CFT9W/2G7	1	ELECT	Electronic	10	6.5" MOL
	2	CFT9W/2G7	2	ELECT	Electronic	20	
Twin (13 W, GX23 Two Pin Base - F13TT)	1	CFT13W/GX23	1	MAG STD	Mag. Stand.	17	7.5" MOL
	2	CFT13W/GX23	2	MAG STD	Mag. Stand.	34	
Twin (13 W, 2GX7 Four Pin Base - F13TT)	1	CFT13W/2GX7	1	ELECT	Electronic	17	7.5" MOL
	2	CFT13W/2GX7	2	ELECT	Electronic	34	
Quad (9 W, G23-2 Two Pin Base - F9DTT Lamp)	1	CFQ9W/G23-2	1	MAG STD 120	120 V Mag. Stand.	13	4.4" MOL
	2	CFQ9W/G23-2	2	MAG STD 120	120 V Mag. Stand.	26	
Quad (13 W, G24d-1 Two Pin Base - F13DTT Lamp)	1	CFQ13W/G24d-1	1	MAG STD 120	120 V Mag. Stand.	18	6.0" MOL
	2	CFQ13W/G24d-1	2	MAG STD 120	120 V Mag. Stand.	36	
	1	CFQ13W/G24d-1	1	MAG STD 277	277 V Mag. Stand.	16	
	2	CFQ13W/G24d-1	2	MAG STD 277	227 V Mag. Stand.	32	
Quad (13 W, GX23-2 Two Pin Base)	1	CFQ13W/GX23-2	1	MAG STD	Mag. Stand.	17	4.8" MOL
	2	CFQ13W/GX23-2	2	MAG STD	Mag. Stand.	34	
Quad (16W GX32d-1 Two Pin Base)	1	CFQ16W/GX32d-1	1	MAG STD	Mag. Stand.	20	5.5" MOL
	2	CFQ16W/GX32d-1	2	MAG STD	Mag. Stand.	40	
Quad (18 W, G24d-2 Two Pin Base - F18DTT Lamp)	1	CFQ18W/G24d-2	1	MAG STD 120	120 V Mag. Stand.	25	6.8" MOL
	2	CFQ18W/G24d-2	2	MAG STD 120	120 V Mag. Stand.	50	
	1	CFQ18W/G24d-2	1	MAG STD 277	227 V Mag. Stand.	22	
	2	CFQ18W/G24d-2	2	MAG STD 277	227 V Mag. Stand.	44	
	1	CFQ22W/GX32d-2	1	MAG STD	Mag. Stand.	27	6.0" MOL

Type	Lamps Number	Lamps Designation	Ballasts Number	Ballasts Designation	Ballasts Description	System Watts	Comment
Quad (22W, GX32d Two Pin Base)	2	CFQ22W/GX32d-2	2	MAG STD	Mag. Stand.	54	
Quad (26 W, G24d-3 Two Pin Base - F26DTT Lamp)	1	CFQ26W/G24d-3	1	MAG STD 120	120 V Mag. Stand.	37	7.6" MOL
	2	CFQ26W/G24d-3	2	MAG STD 120	120 V Mag. Stand.	74	
	1	CFQ26W/G24d-3	1	MAG STD 277	227 V Mag. Stand.	33	
	2	CFQ26W/G24d-3	2	MAG STD 277	227 V Mag. Stand.	66	
	1	CFQ26W/G24d-3	1	ELECT 277V	277 V Electronic	~~27~~ 28	
	2	CFQ26W/G24d-3	2	ELECT 277V	277 V Electronic	54	
Quad (28W GX32d Two Pin Base)	1	CFQ28W/GX32d-3	1	MAG STD	Mag. Stand.	34	6.8" MOL
	2	CFQ28W/GX32d-3	2	MAG STD	Mag. Stand.	68	
Quad (10 W, G24q-1 Four Pin Base)	1	CFQ10W/G24q-1	1	MAG STD 120	120 V Mag. Stand.	16	4.6" MOL
	2	CFQ10W/G24q-1	2	MAG STD 120	120 V Mag. Stand.	32	
	1	CFQ10W/G24q-1	1	MAG STD 277	227 V Mag. Stand.	13	
	2	CFQ10W/G24q-1	2	MAG STD 277	227 V Mag. Stand.	26	
Quad (13 W, G24q-1 Four Pin Base)	1	CFQ13W/G24q-1	1	MAG STD 120	120 V Mag. Stand.	18	6.0" MOL
	2	CFQ13W/G24q-1	2	MAG STD 120	120 V Mag. Stand.	36	
	1	CFQ13W/G24q-1	1	MAG STD 277	227 V Mag. Stand.	16	
	2	CFQ13W/G24q-1	2	MAG STD 277	227 V Mag. Stand.	32	
	1	CFQ13W/G24q-1	1	ELECT	Electronic	~~14~~ 16	
	2	CFQ13W/G24q-1	2	ELECT	Electronic	~~25~~ 29	
Quad (13 W, GX7 Four Pin Base)	1	CFQ13W/GX7	1	MAG STD	Mag. Stand.	17	4.8" MOL
	2	CFQ13W/GX7	2	MAG STD	Mag. Stand.	34	
Quad (18 W, G24q-2 Four Pin Base)	1	CFQ18W/G24q-2	1	MAG STD 120	120 V Mag. Stand.	25	6.8" MOL
	2	CFQ18W/G24q-2	2	MAG STD 120	120 V Mag. Stand.	50	
	1	CFQ18W/G24q-2	1	MAG STD 277	227 V Mag. Stand.	22	
	2	CFQ18W/G24q-2	2	MAG STD 277	227 V Mag. Stand.	44	
	1	CFQ18W/G24q-2	1	ELECT	Electronic	21	
	2	CFQ18W/G24q-2	2	ELECT	Electronic	38	

Type	Lamps Number	Lamps Designation	Ballasts Number	Ballasts Designation	Ballasts Description	System Watts	Comment
Triple (13 W, GX24q-1 Four Pin Base)	1	CFM 13W/GX24q-1	1	MAG STD	Mag. Stand.	18	4.2" MOL
	2	CFM 13W/GX24q-1	2	MAG STD	Mag. Stand.	36	
	1	CFM 13W/GX24q-1	1	ELECT	Electronic	~~14~~ 16	
	2	CFM 13W/GX24q-1	2	ELECT	Electronic	~~25~~ 29	
Triple (18W, GX24q-2 Four Pin Base)	1	CFM 18W/GX24q-2	1	MAG STD	Mag. Stand.	25	5.0" MOL
	2	CFM 18W/GX24q-2	2	MAG STD	Mag. Stand.	50	
	1	CFM 18W/GX24q-2	1	ELECT	Electronic	21	
	2	CFM 18W/GX24q-2	2	ELECT	Electronic	38	
Triple (26W, GX24q-3 Four Pin Base)	1	CFTR 26W/GX24q-3	1	MAG STD	Mag. Stand.	37	4.9 to 5.4" MOL
	2	CFTR 26W/GX24q-3	2	MAG STD	Mag. Stand.	74	
	1	CFTR 26W/GX24q-3	1	ELECT	Electronic	28	
	2	CFTR 26W/GX24q-3	1	ELECT	Electronic	~~55~~ 57	
	1	CFTR 26W/GX24q-3	1	ELECT DIM	Electronic DImming	8~29	BF .05~1.0
	2	CFTR 26W/GX24q-3	1	ELECT DIM	Electronic Dimming	12~57	BF .05~1.0
Triple (32 W, GX24q-3 Four Pin Base)	1	CFTR32WGX24q-3	1	ELECT	Electronic	~~35~~ 36	
	2	CFTR32WGX24q-3	1	ELECT	Electronic	69	
	1	CFTR32WGX24q-3	1	ELECT DIM	Electronic DImming	9~38	BF .05~1.05
	2	CFTR32WGX24q-3	1	ELECT DIM	Electronic Dimming	20~76	BF .05~1.05
Triple or Quad (42W, GX24q-4 Four Pin Base)	1	CFTR42WGX24q-4	1	ELECT	Electronic	46	
	2	CFTR42WGX24q-4	1	ELECT	Electronic	94	
	1	CFTR42WGX24q-4	1	ELECT DIM	Electronic DImming	10~49	BF .05~1.05
	2	CFTR42WGX24q-4	1	ELECT DIM	Electronic Dimming	20~98	BF .05~1.05
Triple or Quad (57W, GX24q-5 Four Pin Base)	1	CFTR57WGX24q-5	1	ELECT	Electronic	62	
	1	CFTR57WGX24q-5	1	ELECT DIM	Electronic Dimming	18~66	BF .05~1.05
Triple or Quad (70W, GX24q-6 Four Pin Base)	1	CFTR70WGX24q-6	1	ELECT	Electronic	75	
	1	CFTR70WGX24q-6	1	ELECT DIM	Electronic Dimming	18~80	BF .05~1.00

RO = ballast factor 70 to 85% NO = ballast factor 85 to 100% HO = ballast factor >100%

Table NA8-~~B~~-4 – Long Compact Fluorescent

Type	Lamps Number	Lamps Designation	Ballasts Number	Ballasts Designation	Ballasts Description	System Watts	Comment
T5 Twin (18W - F18TT Lamp)	1	FT18W/2G11	1	MAG.	Mag. Energy Efficient	23	BF~1.0
	2	FT18W/2G11	1	MAG.	Mag. Energy Efficient	46	BF~1.0
	3	FT18W/2G11	1	MAG.	Mag. Energy Efficient	69	
	1	FT18W/2G11	1	ELECT	Electronic	24	
	2	FT18W/2G11	1	ELECT	Electronic	35	
	3	FT18W/2G11	1	ELECT	Electronic	52	
T5 Twin (24-27W-F24TT or F27TT Lamp)	1	FT24W/2G11	1	MAG.	Mag. Energy Efficient	32	
	2	FT24W/2G11	1	MAG.	Mag. Energy Efficient	66	
	3	FT24W/2G11	1	MAG.	Mag. Energy Efficient	98	
	1	FT24W/2G11	1	ELECT	Electronic	27	BF~1.0
	2	FT24W/2G11	1	ELECT	Electronic	52	BF~1.0
T5 Twin (36-39W - F36TT or F39TT Lamp)	1	FT36W/2G11	1	MAG.	Mag. Energy Efficient	51	
	2	FT36W/2G11	1	MAG.	Mag. Energy Efficient	66	
	3	FT36W/2G11	2	MAG.	Mag. Energy Efficient	117	
	1	FT36W/2G11	1	ELECT	Electronic	37	
	2	FT36W/2G11	1	ELECT	Electronic	70	
	1	FT36W/2G11	1	ELECTHO	Electronic High Output	46	BF=1.22
	2	FT36W/2G11	1	ELECTHO	Electronic High Output	86	BF=1.20
T5 Twin (40 W - F40TT Lamp)	1	FT40W/2G11	1	MAG.	Mag. Energy Efficient	43	
	2	FT40W/2G11	1	MAG.	Mag. Energy Efficient	86	
	3	FT40W/2G11	2	MAG.	Mag. Energy Efficient	130	
Electronic Ballasts	1	FT40W/2G11	1	ELECT NO	Electronic	41	BF~.90
	2	FT40W/2G11	1	ELECT NO1	Electronic	72	BF~.88
	2	FT40W/2G11	1	ELECT NO2	Electronic	78	BF~.97
	3	FT40W/2G11	1	ELECT NO	Electronic	103 110	BF~.86 BF~.88
	1	FT40W/2G11	1	ELECT HO	Electronic High Output	50	BF ~ 1.1
	1	FT40W/2G11	1	ELECT DIM1	Electronic Dimming	10-~~41~~ 45	BF .05~1.0
	2	FT40W/2G11	1	ELECT DIM1	Electronic Dimming	17-~~80~~ 97	BF .05~1.0
	1	FT40W/2G11	1	ELECT DIM2	Electronic Dimming	11-38	BF .05~.88
	2	FT40W/2G11	1	ELECT DIM2	Electronic Dimming	16-76	BF .05~.88
T5 Twin (50 W - F50TT Lamp)	1	FT50W/2G11	1	ELECT NO	Electronic Normal Output	54	BF~.98
	2	FT50W/2G11	1	ELECT NO	Electronic Normal Output	106	BF~.98
	1	FT50W/2G11	1	ELECT HO	Electronic High Output	61	BF~1.12
	2	FT50W/2G11	1	ELECT HO	Electronic High Output	115	BF~1.10
	1	FT50W/2G11	1	ELECT DIM	Electronic Dimming	51	
	2	FT50W/2G11	1	ELECT DIM	Electronic Dimming	92	
T5 Twin (55 W - F55TT Lamp)	1	FT55W/2G11	1	ELECT NO	Electronic Normal Output	58 62	BF~.92 BF~1.0

Type	Lamps		Ballasts			System Watts	Comment
	Number	Designation	Number	Designation	Description		
	2	FT55W/2G11	1	ELECT NO	Electronic Normal Output	109 116	BF~.90 BF~.95
	1	FT55W/2G11	1	ELECT DIM	Electronic Dimming	~~13-59~~ 8~62	~~BF .03~.90~~ BF .01~98
	2	FT55W/2G11	1	ELECT DIM	Electronic Dimming	~~24-114~~ 8-120	~~BF .03~.90~~ BF .01~.98
T5 Twin (80 W – F80TT Lamp)	1	FT80W/2G11	1	ELECT NO	Electronic	91	BF~1.00

RO = ballast factor 70 to 85% NO = ballast factor 85 to 100% HO = ballast factor >100%

Table NA8-~~B~~-5 – Fluorescent U-Tubes

Type	Lamps		Ballasts			System Watts	Comment
	Number	Designation	Number	Designation	Description		
2 ft. Fluorescent U-Tube T8 (32W - FBO31T8 or F32T8/U/6 Lamp)	1	FB31T8/F32T8U	0.5	MAG.	Mag. Energy Efficient	35	Tandem wired
	1	FB31T8/F32T8U	1	MAG.	Mag. Energy Efficient	36	
	2	FB31T8/F32T8U	1	MAG.	Mag. Energy Efficient	69	
	3	FB31T8/F32T8U	1.5	MAG.	Mag. Energy Efficient	104	Tandem wired
	3	FB31T8/F32T8U	2	MAG.	Mag. Energy Efficient	105	
	1	FB31T8/F32T8U	1	ELECT NO	Electronic Normal Output	39	
	2	FB31T8/F32T8U	1	ELECT NO	Electronic Normal Output	62	
	3	FB31T8/F32T8U	1	ELECT NO	Electronic Normal Output	92	
	4	~~FB31T8/F32T8U~~	~~1~~	~~ELECT NO~~	~~Electronic Normal Output~~		
	1	FB31T8/F32T8U	1	ELECT DIM	Electronic DImming	9~33	BF .05~.88
	2	FB31T8/F32T8U	1	ELECT DIM	Electronic DImming	14~64	BF .05~.88
	3	FB31T8/F32T8U	1	ELECT DIM	Electronic Dimming	18~93	BF .05~.88
	4	FB31T8/F32T8U	1	ELECT DIM	Electronic Dimming	25~116	BF .05~.88
2 ft. Fluorescent U-Tube T12 ("Energy Saving" 34W)	1	FB40T12/ES	0.5	MAG.	Mag. Energy Efficient	36	Tandem wired
	1	FB40T12/ES	1	MAG.	Mag. Energy Efficient	43	
	2	FB40T12/ES	1	MAG.	Mag. Energy Efficient	~~72~~ 87	
	3	FB40T12/ES	1	MAG.	Mag. Energy Efficient	105	
	3	FB40T12/ES	1.5	MAG.	Mag. Energy Efficient	108	Tandem wired
	3	FB40T12/ES	2	MAG.	Mag. Energy Efficient	115	
	1	FB40T12/ES	0.5	ELECT	Electronic	30	Tandem wired
	1	FB40T12/ES	1	ELECT	Electronic	31	
	2	FB40T12/ES	1	ELECT	Electronic	59	
	3	FB40T12/ES	1	ELECT	Electronic	90	
	3	FB40T12/ES	1.5	ELECT	Electronic	88	Tandem wired
	3	FB40T12/ES	2	ELECT	Electronic	90	

RO = ballast factor 70 to 85% NO = ballast factor 85 to 100% HO = ballast factor >100%

Table NA8-~~B~~-6 – Fluorescent Linear Lamps – Preheat

Type	Lamps		Ballasts			System Watts	Comment
	Nmbr	Designation	Nmbr	Designation	Description		
Fluorescent Preheat T5 (8W)	1	F8T5	1	MAG STD	Mag. Stand.	12	12" MOL
Fluorescent Preheat T8 (15W)	1	F15T8	1	MAG STD	Mag. Stand.	~~19~~ 22	18" MOL
Fluorescent Preheat T12 (15W)	1	F15T12	1	MAG STD	Mag. Stand.	~~19~~ 23	18" MOL
Fluorescent Preheat T12 (20W)	1	F20T12	1	MAG STD	Mag. Stand.	25	24" MOL
	2	F20T12	1	MAG STD	Mag. Stand.	50	24" MOL
Fluorescent Preheat T8 (30W)	1	F30T8	1	MAG STD	Mag. Stand.	46	30" MOL
	2	F30T8	1	MAG STD	Mag. Stand.	79	30" MOL

RO = ballast factor 70 to 85% NO = ballast factor 85 to 100% HO = ballast factor >100%

Table NA8-~~B~~-7 – Fluorescent Linear Lamps T5

Type	Lamps		Ballasts			System Watts	Comment
	Number	Designation	Number	Designation	Description		
~23" Fluorescent Program Start T5 (14W)	1	F14T5	1	ELECT	Elect. Program Start BF=1	18	
	2	F14T5	1	ELECT	Elect. Program Start BF=1	34	
~34.5" Fluorescent Program Start T5 (21W)	1	F21T5	1	ELECT	Elect. Program Start BF=1	27	
	2	F21T5	1	ELECT	Elect. Program Start BF=1	50	
~46" Fluorescent Program Start T5 (28W)	1	F28T5	1	ELECT	Elect. Program Start BF=1	30	
	2	F28T5	1	ELECT	Elect. Program Start BF=1	60	
~58.5" Fluorescent Program Start T5 (35W)	1	F35T5	1	ELECT	Elect. Program Start BF=1	40	
	2	F35T5	1	ELECT	Elect. Program Start BF=1	78	
~23" Fluorescent Program Start T5 High Output (24W)	1	F24T5HO	1	ELECT	Elect. Program Start BF=1	~~27~~ 29	
	2	F24T5HO	1	ELECT	Elect. Program Start BF=1	~~52~~ 55	
~34.5" Fluorescent Program Start T5 High Output(39W)	1	F39T5	1	ELECT	Elect. Program Start BF=1	43	
	2	F39T5	1	ELECT	Elect. Program Start BF=1	85	
~46" Fluorescent Program Start T5 High Output (54W)	1	F54T5	1	ELECT	Elect. Program Start BF=1	62	
	2	F54T5	1	ELECT	Elect. Program Start BF=1	~~117~~ 121	
	1	F54T5	1	ELECT DIM	Elect. Dimming	~~12~~ 8-63	
	2	F54T5	1	ELECT DIM	Elect. Dimming	~~24~~ 18-125	
~57.5" Fluorescent Program Start T5 High Output (80W)	1	ºF80T5	1	ELECT	Elect. Program Start BF=1	~~89~~ 90	

RO = ballast factor 70 to 85% NO = ballast factor 85 to 100% HO = ballast factor >100%

Table NA8-~~B~~-8 – Fluorescent Rapid Start T-8

Type	Lamps		Ballasts			System Watts	Comment
	Number	Designation	Number	Designation	Description		
2 foot Fluorescent Rapid Start T8 (17W)	1	F17T8	1	MAG.	Mag. Energy Efficient	~~24~~ 31	
	2	F17T8	1	MAG.	Mag. Energy Efficient	45	
Electronic Ballasts	1	F17T8	1	ELECT NO	Electronic Normal Output	22	
	2	F17T8	1	ELECT NO	Electronic Normal Output	33	
	3	F17T8	1	ELECT NO	Electronic Normal Output	53	
	3	F17T8	2	ELECT NO	Electronic Normal Output	55	
	4	F17T8	1	ELECT NO	Electronic Normal Output	63	
2 foot Fluorescent Rapid Start T8 (17W)	1	F17T8	1	ELECT DIM	Electronic Dimming	8~20	BF .05~.88
	2	F17T8	1	ELECT DIM	Electronic Dimming	10~37	BF .05~.88
	3	F17T8	1	ELECT DIM	Electronic Dimming	12~56	BF .05~.88
	4	F17T8	1	ELECT DIM	Electronic Dimming	18~69	BF .05~.88
3 foot Fluorescent Rapid Start T8 (25W)	1	F25T8	1	MAG.	Mag. Energy Efficient	33	
	2	F25T8	1	MAG.	Mag. Energy Efficient	65	
Electronic Ballasts	1	F25T8	1	ELECT NO	Electronic Normal Output	27	
	2	F25T8	1	ELECT NO	Electronic Normal Output	48	
	3	F25T8	1	ELECT NO	Electronic Normal Output	68	
	4	F25T8	1	ELECT NO	Electronic Normal Output	89	
	1	F25T8	1	ELECT RO	Electronic Reduced Output	24	
	2	F25T8	1	ELECT RO	Electronic Reduced Output	41	
	3	F25T8	1	ELECT RO	Electronic Reduced Output	59	
	4	F25T8	1	ELECT RO	Electronic Reduced Output	76	
	1	F25T8	1	ELECT HO	Electronic High Output	29	BF~1.05
	2	F25T8	1	ELECT HO	Electronic High Output	51	BF~1.05
	3	F25T8	1	ELECT HO	Electronic High Output	74	BF~1.05
	1	F25T8	1	ELECT DIM	Electronic Dimming	8~25	BF .05~.94
	2	F25T8	1	ELECT DIM	Electronic Dimming	13~49	BF .05~.94
	3	F25T8	1	ELECT DIM	Electronic Dimming	16~76	BF .05~.94
	4	F25T8	1	ELECT DIM	Electronic Dimming	22~96	BF .05~.88
4 foot Fluorescent Rapid Start T12 for T-8 ballasts (“Energy Saving” 25W)	1	F25T12ES	1	ELECT NO	Electronic Normal Output	27	
	2	F25T12ES	1	ELECT NO	Electronic Normal Output	52	
	3	F25T12ES	1	ELECT NO	Electronic Normal Output	77	

Type	Lamps		Ballasts			System Watts	Comment
	Number	Designation	Number	Designation	Description		
	4	F25T12ES	1	ELECT NO	Electronic Normal Output	95	
4 foot Fluorescent Instant Start T8 (“Energy Saving” 30W)	1	F32T8/30ES	1	ELECT NO	Electronic Normal Output	29	
	2	F32T8/30ES	1	ELECT NO	Electronic Normal Output	54	
	3	F32T8/30ES	1	ELECT NO	Electronic Normal Output	79	
	4	F32T8/30ES	1	ELECT NO	Electronic Normal Output	104	
	1	F32T8/30ES	1	ELECT RO	Electronic Reduced Output	27	
	2	F32T8/30ES	1	ELECT RO	Electronic Reduced Output	48	
	3	F32T8/30ES	1	ELECT RO	Electronic Reduced Output	70	
	4	F32T8/30ES	1	ELECT RO	Electronic Reduced Output	91	
	1	F32T8/30ES	1	ELECT NO EE	EE Normal Output	33	
	2	F32T8/30ES	1	ELECT NO EE	Energy efficiency Normal Output	52	
	3	F32T8/30ES	1	ELECT NO EE	Energy efficiency Normal Output	77	
	4	F32T8/30ES	1	ELECT NO EE	Energy efficiency Normal Output	101	
	1	F32T8/30ES	1	ELECT RO EE	EE Reduced Output	28	
	2	F32T8/30ES	1	ELECT RO EE	EE Reduced Output	45	
	3	F32T8/30ES	1	ELECT RO EE	EE Reduced Output	66	
	4	F32T8/30ES	1	ELECT RO EE	EE Reduced Output	88	
4 foot Fluorescent Rapid Start T8 (32W)	1	F32T8	0.5	MAG.	Mag. Energy Efficient	35	Tandem wired
	1	F32T8	1	MAG.	Mag. Energy Efficient	~~39~~ 44	
	2	F32T8	1	MAG.	Mag. Energy Efficient	~~70~~ 74	
	3	F32T8	1.5	MAG.	Mag. Energy Efficient	105	Tandem wired
	3	F32T8	2	MAG.	Mag. Energy Efficient	109	
	4	F32T8	2	MAG.	Mag. Energy Efficient	140	(2) two-lamp ballasts
4 foot Fluorescent Rapid Start T8 (32W)	1	F32T8	1	ELECT NO	Electronic Normal Output	32	
	2	F32T8	1	ELECT NO	Electronic Normal Output	62	
	3	F32T8	1	ELECT NO	Electronic Normal Output	93	
	4	F32T8	1	ELECT NO	Electronic Normal Output	114	

Type	Lamps		Ballasts			System Watts	Comment
	Number	Designation	Number	Designation	Description		
	1	F32T8	1	EE NO	EE Normal Output	35	
	2	F32T8	1	EE NO	EE Normal Output	55	
	3	F32T8	1	EE NO	EE Normal Output	82	
	4	F32T8	1	EE NO	EE Normal Output	107	
	1	F32T8	1	ELECT RO	Electronic Reduced Output	29	
	2	F32T8	1	ELECT RO	Electronic Reduced Output	51	
	3	F32T8	1	ELECT RO	Electronic Reduced Output	76	
	4	F32T8	1	ELECT RO	Electronic Reduced Output	98	
	2	F32T8	1	ELECT HO	Electronic High Output	77	BF~1.13
	3	F32T8	1	ELECT HO	Electronic High Output	112	BF~1.18
	1	F32T8	1	EE RO	EE Reduced Output	30	
	2	F32T8	1	EE RO	EE Reduced Output	48	
	3	F32T8	1	EE RO	EE Reduced Output	73	
	4	F32T8	1	EE RO	EE Reduced Output	96	
	2	F32T8	1	ELECT TL	Electronic Two Level (50 & 100%)	65	
	1	F32T8	1	ELECT DIM1	Electronic Dimming	9~35	BF .05~1.0
	2	F32T8	1	ELECT DIM1	Electronic Dimming	15~68	BF .05~1.0
	3	F32T8	1	ELECT DIM1	Electronic Dimming	20~102	BF .05~1.0
	1	F32T8	1	ELECT DIM2	Electronic Dimming	9~33	BF .05~.88
	2	F32T8	1	ELECT DIM2	Electronic Dimming	14~64	BF .05~.88
	3	F32T8	1	ELECT DIM2	Electronic Dimming	18~93	BF .05~.88
	4	F32T8	1	ELECT DIM2	Electronic Dimming	25~116	BF .05~.88
5 foot Fluorescent Rapid Start T8 (40W)	1	F40T8	1	MAG.	Mag. Energy Efficient	50	
	2	F40T8	1	MAG.	Mag. Energy Efficient	92	
	1	F40T8	1	ELECT	Electronic	46	
	2	F40T8	1	ELECT	Electronic	79	
	3	F40T8	1	ELECT	Electronic	112	
3 foot Fluorescent Rapid Start T12 (“Energy-Saving” 25W)	1	F30T12/ES	1	MAG STD	Mag. Stand.	42	
	2	F30T12/ES	1	MAG STD	Mag. Stand.	74	
	3	F30T12/ES	1.5	MAG STD	Mag. Stand.	111	Tandem wired
	3	F30T12/ES	2	MAG STD	Mag. Stand.	116	
	2	F30T12/ES	1	MAG.	Mag. Energy Efficient	66	
	1	F30T12/ES	1	ELECT	Electronic	26	
	2	F30T12/ES	1	ELECT	Electronic	53	
3 foot Fluorescent	1	F30T12	1	MAG STD	Mag. Stand.	46	

Type	Lamps		Ballasts			System Watts	Comment
	Number	Designation	Number	Designation	Description		
Rapid Start T12 (“Stand.” 30W)	2	F30T12	1	MAG STD	Mag. Stand.	~~79~~ 80	
	3	F30T12	1.5	MAG STD	Mag. Stand.	118	Tandem wired
	3	F30T12	2	MAG STD	Mag. Stand.	125	
	2	F30T12	1	MAG.	Mag. Energy Efficient	73	
	1	F30T12	1	ELECT	Electronic	30	
	2	F30T12	1	ELECT	Electronic	~~60~~ 66	
4 foot Fluorescent Rapid Start T12 (“Energy-Saving Plus”32W)	1	F40T12/ES Plus	0.5	MAG.	Mag. Energy Efficient	34	Tandem wired
	1	F40T12/ES Plus	1	MAG.	Mag. Energy Efficient	41	
	2	F40T12/ES Plus	1	MAG.	Mag. Energy Efficient	68	
	3	F40T12/ES Plus	1	MAG.	Mag. Energy Efficient	99	
	3	F40T12/ES Plus	1.5	MAG.	Mag. Energy Efficient	102	Tandem wired
	3	F40T12/ES Plus	2	MAG.	Mag. Energy Efficient	109	
	4	F40T12/ES Plus	2	MAG.	Mag. Energy Efficient	136	(2) Two-lamp ballasts

RO = ballast factor 70 to 85% NO = ballast factor 85 to 100% HO = ballast factor >100%

Table NA8-~~B~~-9 – Fluorescent Rapid Start T-12

Type	Lamps		Ballasts			System Watts	Comment
	Number	Designation	Number	Designation	Description		
4 foot Fluorescent Rapid Start T12 (“Energy-Saving”34W)	1	F40T12/ES	0.5	MAG STD**	Mag. Stand.	42	Tandem wired
	1	F40T12/ES	1	MAG STD**	Mag. Stand.	48	
	2	F40T12/ES	1	MAG STD**	Mag. Stand.	82	
	3	F40T12/ES	1.5	MAG STD**	Mag. Stand.	122	Tandem wired
	3	F40T12/ES	2	MAG STD**	Mag. Stand.	130	
	4	F40T12/ES	2	MAG STD**	Mag. Stand.	164	(2) Two-lamp ballasts
	1	F40T12/ES	0.5	MAG.	Mag. Energy Efficient	36	Tandem wired
	1	F40T12/ES	1	MAG.	Mag. Energy Efficient	43	
	2	F40T12/ES	1	MAG.	Mag. Energy Efficient	72	
	3	F40T12/ES	1	MAG.	Mag. Energy Efficient	105	
	3	F40T12/ES	1.5	MAG.	Mag. Energy Efficient	108	Tandem wired
	3	F40T12/ES	2	MAG.	Mag. Energy Efficient	112	
	4	F40T12/ES	2	MAG.	Mag. Energy Efficient	144	(2) Two-lamp ballasts
	2	F40T12/ES	1	MAG HC	Mag. Heater Cutout	58	
	3	F40T12/ES	1.5	MAG HC	Mag. Heater Cutout	87	Tandem wired
	4	F40T12/ES	2	MAG HC	Mag. Heater Cutout	116	(2) Two-lamp ballasts
	2	F40T12/ES	1	MAG HC FO	Mag. Heater Cutout Full Light	66	
	3	F40T12/ES	1.5	MAG HC FO	Mag. Heater Cutout Full Light	99	Tandem wired
	4	F40T12/ES	2	MAG HC FO	Mag. Heater Cutout Full Light	132	(2) Two-lamp ballasts
	1	F40T12/ES	0.5	ELECT	Electronic	30	Tandem wired
	1	F40T12/ES	1	ELECT	Electronic	31	
	2	F40T12/ES	1	ELECT	Electronic	62	
	3	F40T12/ES	1	ELECT	Electronic	90	
	3	F40T12/ES	1.5	ELECT	Electronic	93	Tandem wired
	3	F40T12/ES	2	ELECT	Electronic	93	
	4	F40T12/ES	1	ELECT	Electronic	121	
	4	F40T12/ES	2	ELECT	Electronic	124	(2) Two-lamp ballasts
	2	F40T12/ES	1	ELECT AO	Elec. Adjustable Output (to 15%)	60	
	3	F40T12/ES	1.5	ELECT AO	Elec. Adjustable Output (to 15%)	90	Tandem wired
	4	F40T12/ES	2	ELECT AO	Elec. Adjustable Output (to 15%)	120	(2) Two-lamp ballasts

Type	Lamps		Ballasts			System Watts	Comment
	Number	Designation	Number	Designation	Description		
4 foot Fluorescent Rapid Start Stand. (40W)	1	F40T12	0.5	MAG.	Mag. Energy Efficient	44	Tandem wired
	1	F40T12	1	MAG.	Mag. Energy Efficient	46	
	2	F40T12	1	MAG.	Mag. Energy Efficient	88	
	3	F40T12	1	MAG.	Mag. Energy Efficient	127	
	3	F40T12	1.5	MAG.	Mag. Energy Efficient	132	Tandem wired
	3	F40T12	2	MAG.	Mag. Energy Efficient	134	
	4	F40T12	2	MAG.	Mag. Energy Efficient	176	(2) Two-lamp ballasts
	2	F40T12	1	MAG HC	Mag. Heater Cutout	71	
	3	F40T12	1.5	MAG HC	Mag. Heater Cutout	107	Tandem wired
	4	F40T12	2	MAG HC	Mag. Heater Cutout	142	(2) Two-lamp ballasts
4 foot Fluorescent Rapid Start Stand. (40W) *cont.*	2	ºF40T12	1	MAG ºF FO	Mag. Heater Cutout Full Light	80	
	3	ºF40T12	1.5	MAG ºF FO	Mag. Heater Cutout Full Light	120	Tandem wired
	4	ºF40T12	2	MAG ºF FO	Mag. Heater Cutout Full Light	160	(2) Two-lamp ballasts
	1	ºF40T12	0.5	ELECT	Electronic	36	Tandem wired
	1	ºF40T12	1	ELECT	Electronic	37	
	2	ºF40T12	1	ELECT	Electronic	72	
	3	ºF40T12	1	ELECT	Electronic	107	
	3	ºF40T12	1.5	ELECT	Electronic	108	Tandem wired
	3	ºF40T12	2	ELECT	Electronic	109	
	4	ºF40T12	1	ELECT	Electronic	135	
	4	ºF40T12	2	ELECT	Electronic	144	(2) Two-lamp ballasts
	2	ºF40T12	1	ELECT RO	Electronic Reduce Output (75%)	61	
	3	ºF40T12	1	ELECT RO	Electronic Reduce Output (75%)	90	
	3	ºF40T12	1.5	ELECT RO	Electronic Reduce Output (75%)	92	Tandem wired
	4	ºF40T12	2	ELECT RO	Electronic Reduce Output (75%)	122	(2) Two-lamp ballasts
	2	ºF40T12	1	ELECT TL	Elec. Two Level (50 & 100%)	69	
	3	ºF40T12	1.5	ELECT TL	Elec. Two Level (50 & 100%)	104	Tandem wired
	4	ºF40T12	2	ELECT TL	Elec. Two Level (50 & 100%)	138	(2) Two-lamp ballasts
	2	ºF40T12	1	ELECT AO	Elec. Adjustable Output (to 15%)	73	
	3	ºF40T12	1.5	ELECT AO	Elec. Adjustable Output (to 15%)	110	Tandem wired

Type	Lamps		Ballasts			System Watts	Comment
	Number	Designation	Number	Designation	Description		
	4	ºF40T12	2	ELECT AO	Elec. Adjustable Output (to 15%)	146	(2) Two-lamp ballasts
	2	ºF40T12	1	ELECT DIM	Electronic Dimming (to 1%)	83	
	3	ºF40T12	1.5	ELECT DIM	Electronic Dimming (to 1%)	125	Tandem wired
	4	ºF40T12	2	ELECT DIM	Electronic Dimming (to 1%)	166	(2) Two-lamp ballasts

RO = ballast factor 70 to 85% NO = ballast factor 85 to 100% HO = ballast factor >100%

Table NA8-~~B~~-10 – Fluorescent Rapid Start High Output (HO) T8 & T12, 8 ft

Type	Lamps		Ballasts			System Watts	Comment
	Number	Designation	Number	Designation	Description		
8 foot Fluorescent Rapid Start T8 High Output (86W)	1	F96T8/HO	1	ELECT	Electronic	88	
	2	F96T8/HO	1	ELECT	Electronic	160	
8 foot Fluorescent Rapid Start T12 High Output (“Energy-Saving” 95W)	1	F96T12/HO/ES	1	MAG STD	Mag. Stand.	125	
	2	F96T12/HO/ES	1	MAG STD**	Mag. Stand.	227	
	2	F96T12/HO/ES	1	MAG.	Mag. Energy Efficient	208	
	2	F96T12/HO/ES	1	ELECT	Electronic	170	
8 foot Fluorescent Rapid Start T12 High Output (“Stand.” 110W)	1	F96T12/HO	1	MAG STD	Mag. Stand.	140	
	2	F96T12/HO	1	MAG STD**	Mag. Stand.	252	
	2	F96T12/HO	1	MAG.	Mag. Energy Efficient	237	
	1	F96T12/HO	1	ELECT	Electronic	119	
	2	F96T12/HO	1	ELECT	Electronic	205	
8 foot Fluorescent Rapid Start T12 Very High Output (“Energy-Saving” 195W)	1	F96T12/VHO/ES	1	MAG STD	Mag. Stand.	200	
	2	F96T12/VHO/ES	1	MAG STD	Mag. Stand.	325	
8 foot Fluorescent Rapid Start T12 Very High Output (“Stand.” 215W)	1	Stand.96T12/VHO	1	MAG STAND.	Mag. Stand.	230	
	2	Stand.96T12/VHO	1	MAG STAND.	Mag. Stand.	~~440~~ 452	

RO = ballast factor 70 to 85% NO = ballast factor 85 to 100% HO = ballast factor >100%

Table NA8-~~B~~-11 – Fluorescent Instant Start (single pin base "Slimline") T12, 4 ft

Type	Lamps		Ballasts			System Watts	Comment
	Number	Designation	Number	Designation	Description		
4 foot Fluorescent Slimline Energy-Saving T12 (32W)	1	Stand.48T12/ES	1	MAG STAND.	Mag. Stand.	51	
	2	Stand.48T12/ES	1	MAG STAND.	Mag. Stand.	82	
4 foot Fluorescent Slimline Stand. Stand. (39W)	1	Stand.48T12	1	MAG Stand.	Mag. Stand.	59	
	2	Stand.48T12	1	MAG Stand.	Mag. Stand.	98	

RO = ballast factor 70 to 85% NO = ballast factor 85 to 100% HO = ballast factor >100%

Table NA8-~~B~~-12 – Fluorescent Instant Start (single pin base "Slimline") T8 & T12, 8 ft.

Type	Lamps		Ballasts			System Watts	Comment
	Number	Designation	Number	Designation	Description		
8 foot Fluorescent T8 Slimline (59W)	1	F96T8	1	MAG.	Mag. Stand.	58	
	2	F96T8	1	MAG.	Mag. Stand.	120	
	2	F96T8	1	ELECT NO	Electronic Normal Output	110	
	1	F96T8	1	ELECT HO	Electronic High Output	72	BF~1.10
	2	F96T8	1	ELECT HO1	Electronic High Output	140	BF~1.10
	2	F96T8	1	ELECT HO2	Electronic High Output	151	BF~1.20
8 foot Fluorescent T12 Slimline (“Energy-Saving” 60W)	1	F96T12/ES	1	MAG STD	Mag. Stand.	~~74~~ 87	
	2	F96T12/ES	1	MAG STD**	Mag. Stand.	~~131~~ 135	
	2	F96T12/ES	1	MAG.	Mag. Energy Efficient	112	
	1	F96T12/ES	1	ELECT	Electronic	70	
	2	F96T12/ES	1	ELECT	Electronic	107	
8 foot Fluorescent T12 Slimline (“Stand.” 75W)	1	F96T12	1	MAG STD	Mag. Stand.	~~92~~ 101	
	2	F96T12	1	MAG STD**	Mag. Stand.	~~158~~ 160	
	2	F96T12	1	MAG.	Mag. Energy Efficient	144	
	1	F96T12	1	ELECT	Electronic	85	
	2	F96T12	1	ELECT	Electronic	132	

RO = ballast factor 70 to 85% NO = ballast factor 85 to 100% HO = ballast factor >100%

Table NA8-~~B~~-13 -– High Intensity Discharge

Type	Lamps		Ballasts			System Watts	Comment
	Number	Designation	Number	Designation	Description		
Mercury Vapor	1	H40	1	MAG STD	Mag. Stand.	51	
	1	H50	1	MAG STD	Mag. Stand.	~~63~~ 68	
	1	H75	1	MAG STD	Mag. Stand.	~~88~~ 92	
	1	H100	1	MAG STD	Mag. Stand.	~~119~~ 120	
	1	H175	1	MAG STD	Mag. Stand.	~~197~~ 205	
	1	H250	1	MAG STD	Mag. Stand.	285	
	1	H400	1	MAG STD	Mag. Stand.	~~450~~ 454	
	1	H1000	1	MAG STD	Mag. Stand.	1080	
Metal Halide	1	M35/39	1	MAG STD	Mag. Stand.	~~48~~ 58	
	1	M35/39	1	ELECT	Electronic	44	
	1	M50	1	MAG STD	Mag. Stand.	68	
	1	M50	1	ELECT	Electronic	58	
	1	M70	1	MAG STD	Mag. Stand.	~~92~~ 95	
	1	M70	1	ELECT	Electronic	86	
	1	M100	1	MAG STD	Mag. Stand.	~~122~~ 130	
	1	M100	1	ELECT	Electronic	110	
	1	M125	1	MAG STD	Mag. Stand.	150	
	1	M150	1	MAG STD	Mag. Stand.	~~186~~ 189	
	1	M150	1	ELECT	Electronic	168	
	1	M175	1	MAG STD	Mag. Stand.	~~205~~ 208	
	1	M200	1	MAG STD	Mag. Stand.	232	
	1	M225	1	MAG STD	Mag. Stand.	258	
	1	M250	1	MAG STD	Mag. Stand.	295	
	1	M320	1	MAG STD	Mag. Stand.	~~365~~ 368	
	1	M320	1	MAG LR	277v Linear Reactor	345	
	1	M360	1	MAG STD	Mag. Stand.	422	
	1	M360	1	MAG LR	277v Linear Reactor	388	
	1	M400	1	MAG STD	Mag. Stand.	461	
	1	M400	1	MAG LR	277v Linear Reactor	426	
	1	M450	1	MAG STD	Mag. Stand.	502	
	1	M450	1	MAG LR	277v Linear Reactor	478	
	1	M750	1	MAG STD	Mag. Stand.	820	
	1	M900	1	MAG STD	Mag. Stand.	990	
	1	M1000	1	MAG STD	Mag. Stand.	1080	
	1	M1500	1	MAG STD	Mag. Stand.	1650	
	1	M1650	1	MAG STD	Mag. Stand.	1810	
High Pressure Sodium	1	S35	1	MAG STD	Mag. Stand.	~~44~~ 47	

Type	Lamps		Ballasts			System Watts	Comment
	Number	Designation	Number	Designation	Description		
High Pressure Sodium *cont.*	1	S50	1	MAG STD	Mag. Stand.	~~61~~ 66	
	1	S70	1	MAG STD	Mag. Stand.	93	
	1	S100	1	MAG STD	Mag. Stand.	~~116~~ 128	
	1	S150	1	MAG STD	Mag. Stand.	~~173~~ 188	
	1	S200	1	MAG STD	Mag. Stand.	240	
	1	S250	1	MAG STD	Mag. Stand.	302	
	1	S400	1	MAG STD	Mag. Stand.	469	
	1	S1000	1	MAG STD	Mag. Stand.	~~1090~~ 1100	
Low Pressure Sodium	1	LPS18	1	MAG STAND.	Mag. Stand.	30	
	1	LPS35	1	MAG STAND.	Mag. Stand.	60	
	1	LPS55	1	MAG STAND.	Mag. Stand.	80	
	1	LPS90	1	MAG STAND.	Mag. Stand.	125	
	1	LPS135	1	MAG STAND.	Mag. Stand.	178	
	1	LPS180	1	MAG STAND.	Mag. Stand.	220	

RO = ballast factor 70 to 85% NO = ballast factor 85 to 100% HO = ballast factor >100%

Table NA8-~~B~~-14 – 12 Volt Tungsten Halogen Lamps Including MR16, Bi-pin, AR70, AR111, PAR36

Type	Lamps		Ballasts			System Watts	Comment
	Number	Designation	Number	Designation	Description		
	1	20 watt lamp	1	ELECT	Electronic Power Supply	23	
	1	25 watt lamp	1	ELECT	Electronic Power Supply	28	
	1	35 watt lamp	1	ELECT	Electronic Power Supply	38	
	1	37 watt lamp	1	ELECT	Electronic Power Supply	41	
	1	42 watt lamp	1	ELECT	Electronic Power Supply	45	
	1	50 watt lamp	1	ELECT	Electronic Power Supply	54	
	1	65 watt lamp	1	ELECT	Electronic Power Supply	69	
	1	71 watt lamp	1	ELECT	Electronic Power Supply	75	
	1	75 watt lamp	1	ELECT	Electronic Power Supply	80	
	1	100 watt lamp	1	ELECT	Electronic Power Supply	106	
	1	20 watt lamp	1	MAG	Mag. Transformer	24	
	1	25 watt lamp	1	MAG	Mag. Transformer	29	
	1	35 watt lamp	1	MAG	Mag. Transformer	39	
	1	37 watt lamp	1	MAG	Mag. Transformer	42	
	1	42 watt lamp	1	MAG	Mag. Transformer	46	
	1	50 watt lamp	1	MAG	Mag. Transformer	55	
	1	65 watt lamp	1	MAG	Mag. Transformer	70	
	1	71 watt lamp	1	MAG	Mag. Transformer	76	
	1	75 watt lamp	1	MAG	Mag. Transformer	81	
	1	100 watt lamp	1	MAG	Mag. Transformer	108	